REPORT OF THE SECRETARY TO THE TRAFFIC COMMISSION

September 4, 1958

Honorable City Council
Beverly Hills, California

Gentlemen:

The regular meeting of the Traffic Commission of the City of Beverly Hills, California, was held in the Committee Room of the Council Chamber, City Hall, on September 4, 1958, Chairman Bollman presiding.

The roll was called with Commissioners Bollman, Fait and McDonald present. Commissioners Hamsher and Talbert were absent. Also present were David K. Speer, Director of Public Works, and Sgt. Robert D. Bowers, Traffic Division, Police Department, both acting in an advisory capacity; and Hattie R. Facundus.

1. Proposed crosswalks on Santa Monica Boulevard (South Roadway) at Charleville Boulevard and Lasky Drive.

A letter from Mr. J. B. Edwards, Executive Vice President of the Beverly Hills Chamber of Commerce, addressed to Commissioner Bollman, Chairman of the Beverly Hills Traffic Commission, was presented to the Traffic Commission for their review. Mr. Edwards stated in his letter that during the past several months the Chamber of Commerce has received an increasing number of complaints from shoppers and store owners relative to the absence of pedestrian crosswalks on the south roadway of Santa Monica Boulevard west of Wilshire Boulevard. He further indicated that Chamber of Commerce recommended the installation of such crosswalks.

The Commissioners, after considerable discussion of this matter, were in agreement that the City Council should be urged to proceed with the installation of pedestrian crosswalks on the South Roadway of Santa Monica Boulevard westerly of Wilshire Boulevard.

THEREFORE, THE FOLLOWING RESOLUTION WAS OFFERED AND UNANIMOUSLY PASSED:

RESOLVED, that recommendation be made to the City Council that pedestrian crosswalks be established on the south roadway of Santa Monica Boulevard at the west side of Charleville Boulevard and at the west side of Lasky Drive.

Respectfully submitted,

D. K. Speer

D. K. SPEER
Secretary
Traffic Commission

Transportation Capital Improvement Projects 2013-2018

T&PC MEETING 3-7-13

Proposed Location for the mid-block signalized crosswalk

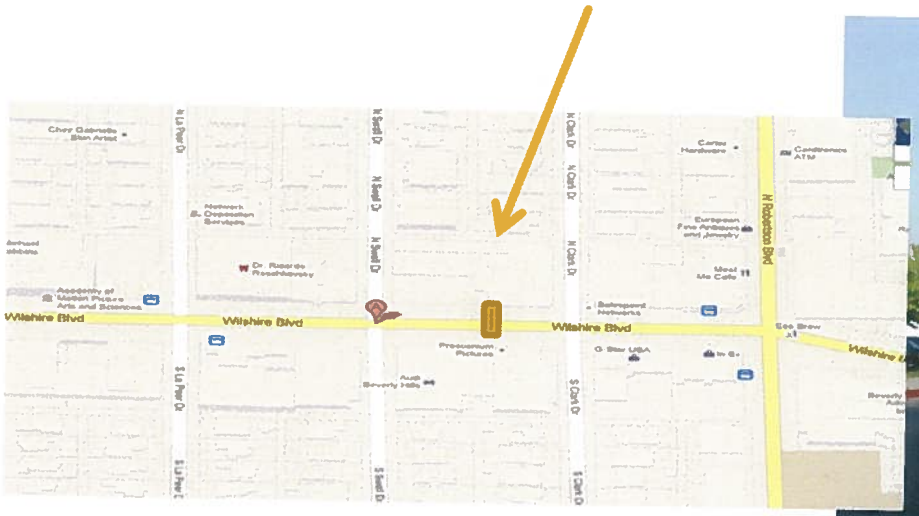

A new midblock crosswalk

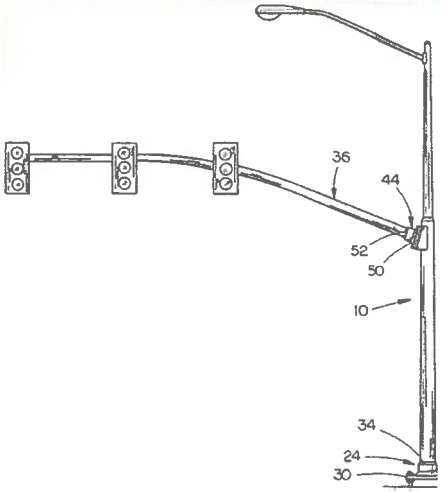

Proposed Traffic Signal at Maple and Wilshire- Lexus project mitigation

Installation of traffic signal for the existing crosswalk at Palm and Wilshire

Proposed new traffic signal at Clifton and Canon replacing the 3-way stop

Wilshire and N. Santa Monica, geometric design modification
adding a double left turn lane (eastbound) Hilton project mitigation

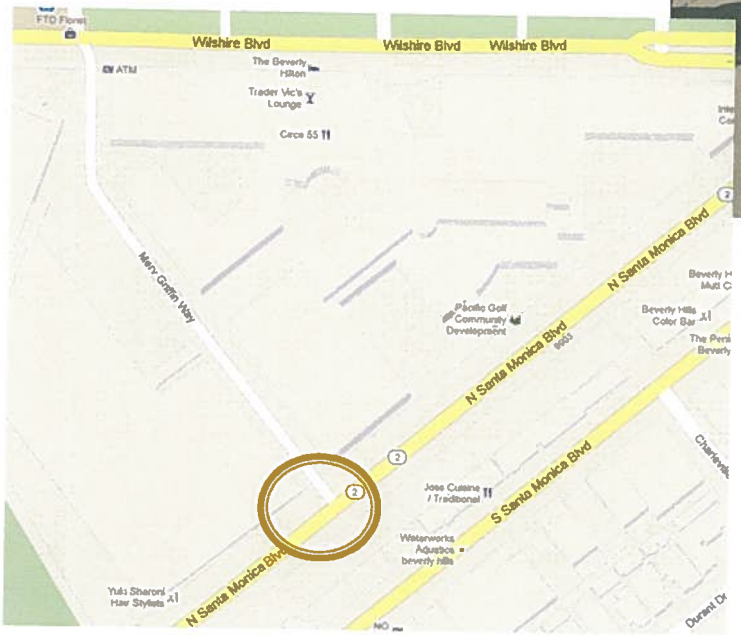

New traffic signal at N. Santa Monica and Merv Griffin Drive
Hilton and 9900 Wilshire joint project mitigation-

View from westbound North Santa Monica Boulevard

2013 Metro Call for Projects – **Construction of Bulb-outs and Signalized Midblock Crosswalks**

City of Beverly Hills Public Works and Transportation

Striping improvements and maintenance

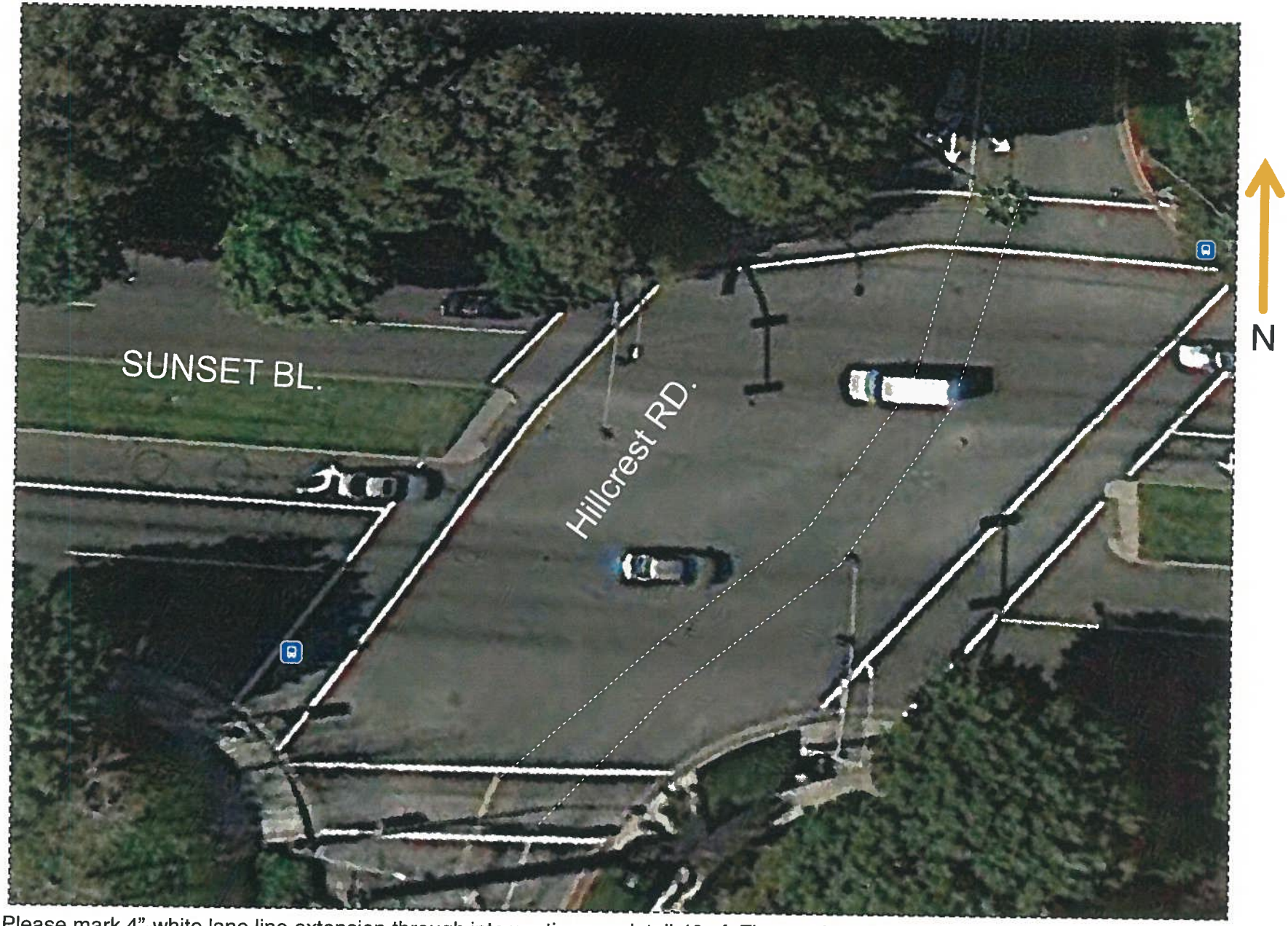

Please mark 4"-white lane line extension through intersection per detail 40 of Figure 3A-112(CA) – California MUTCD 2012 edition –P. 672
Please cat-track the markings prior to final paint- Call 310-285-2556 for field check of cat-tracking . Bijan Vaziri-Traffic Engineer

Striping improvements and maintenance

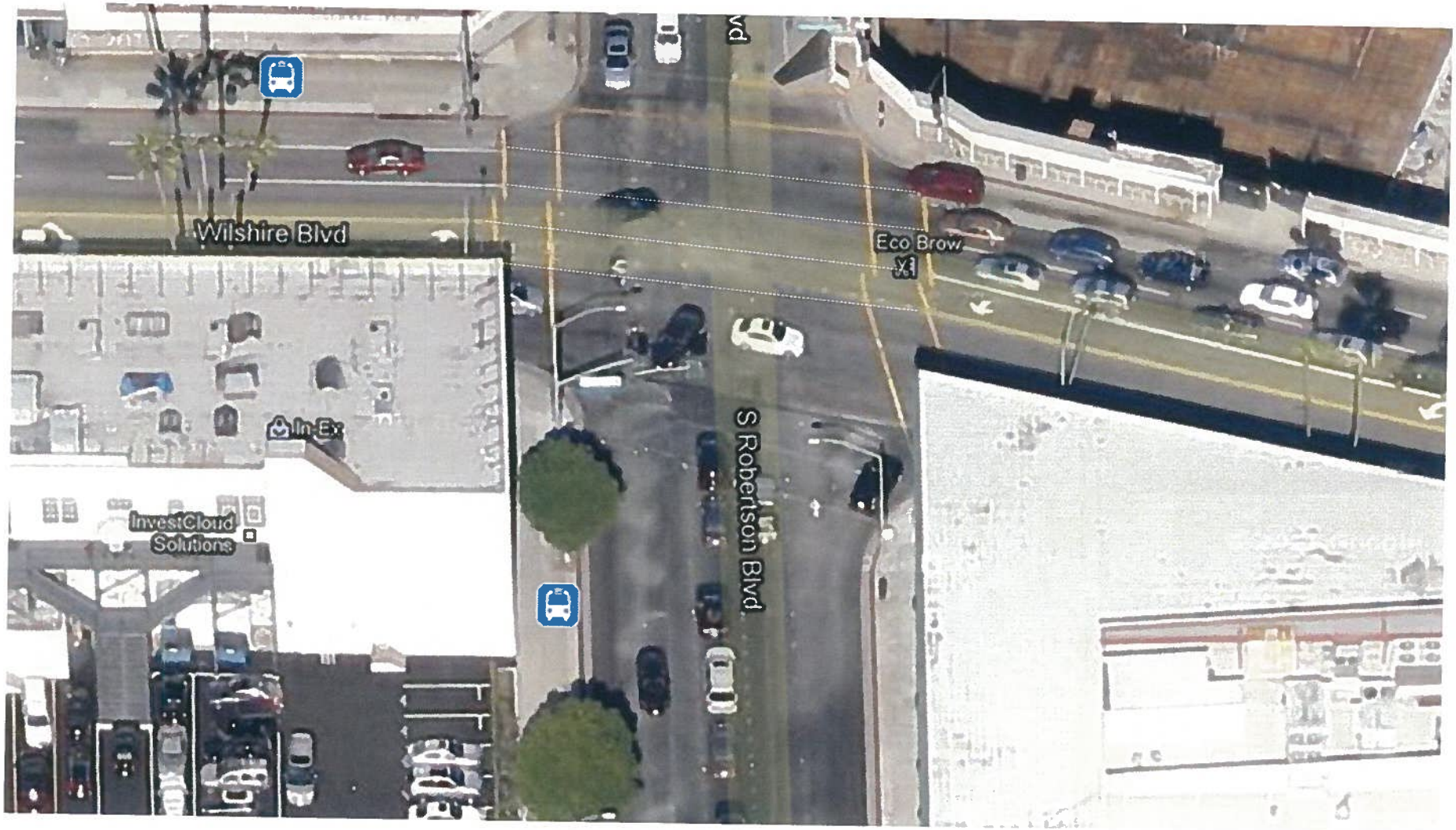

Striping guiding lines on westbound and eastbound approaches.
at Robertson and Wilshire to avoid lane merge.

Permit parking signs project- punch list

Replacing outdated bus benches and adding some.
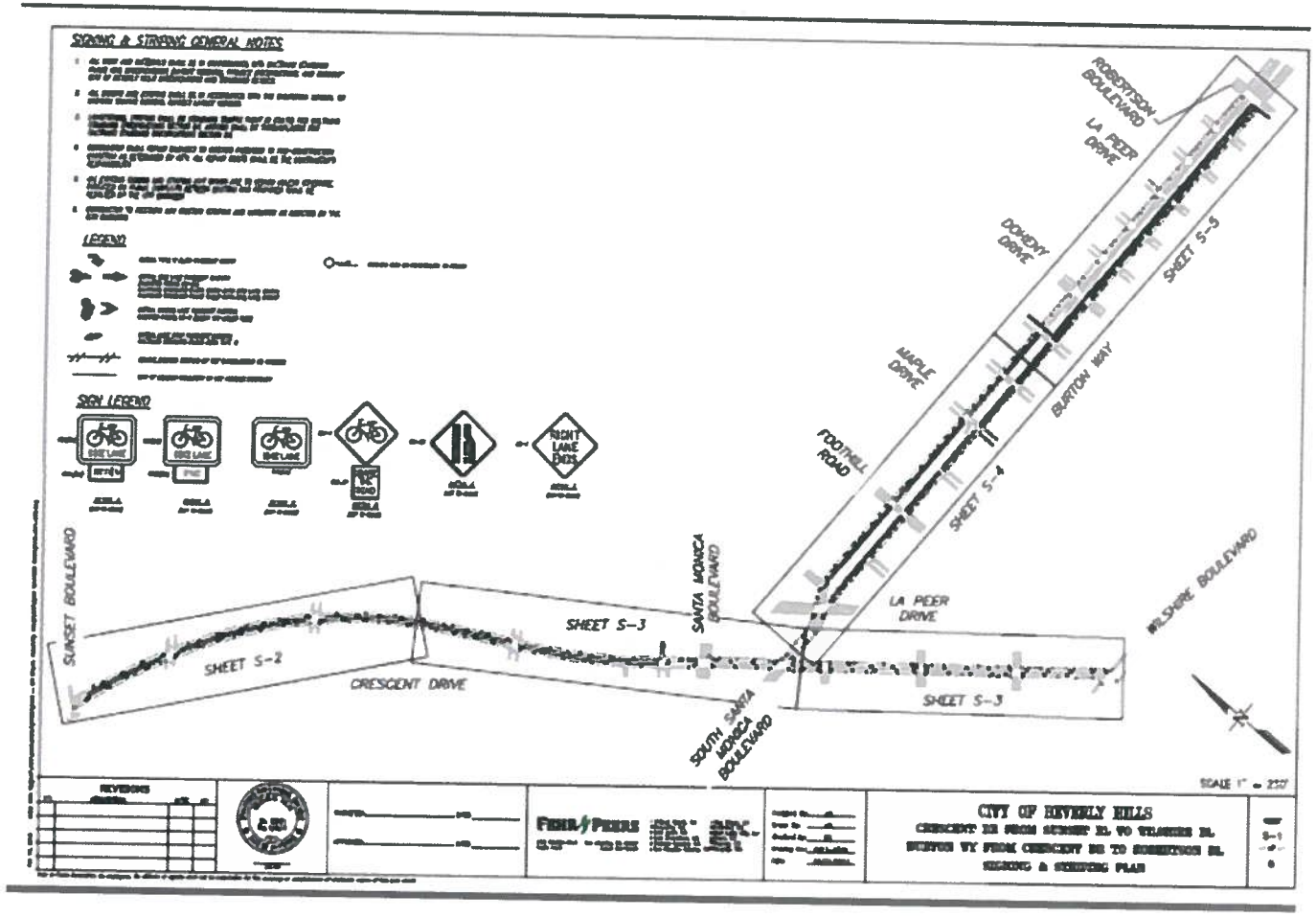
Beverly Hills first bike routes