**City of Beverly Hills**
Planning Division
455 N. Rexford Drive Beverly Hills, CA 90210
TEL. (310) 285-1141 FAX. (310) 858-5966

# Architectural Commission Report

**Meeting Date:** Wednesday, November 18, 2015

**Subject:** **JUICE SERVED HERE (PL1511173)**
**451 North Beverly Drive**
Request for approval of a revision to a previously approved façade remodel and landscaping. The Architectural Commission previously adopted a Categorical Exemption for the project on August 19, 2015 pursuant to the California Environmental Quality Act; no further environmental review is required at this time.

**Project agent:** Kirsten Bunger – Juice Served Here

**Recommendation:** Conduct public hearing to discuss the project details and provide the applicant with an approval.

## REPORT SUMMARY

The applicant is requesting review and approval of a revision to a previously approved façade remodel and landscaping for Juice Served Here located at 451 North Beverly Drive. The project was previously approved by the Architectural Commission at its meeting on August 19, 2015. The modification includes the following:

- Removal of vertically-oriented cedar wood panels adjacent to storefront opening due to inability to encroach into the public right-of-way at a height of less than eight feet (8'-0") above grade. The vertically-oriented cedar wood panels will remain on the façade located above the storefront.
- Incorporation of raised black-painted steel planter beds (at-grade planter beds previously approved) for storefront-adjacent landscaping.

No changes to the approved landscape palette, business identification signage, or construction barricade are proposed.

## URBAN DESIGN ANALYSIS

The proposed modifications to the previously approved façade remodel and landscaping will continue to serve as a positive enhancement to the streetscape of North Beverly Drive with a unique design aesthetic. The black-painted stucco, which will now be exposed on either side of the storefront, appropriately anchors the façade and supports the design located above the storefront.

## ZONING CODE COMPLIANCE

Applications for design review are preliminarily evaluated for compliance with the zoning code. Applicants are encouraged and have the option of requesting a comprehensive review separate and apart from this application. Formal compliance review will occur when a building permit application is filed (plan check). The applicant has been advised that changes during plan check may require revisions and subsequent approval from the Architectural Commission or staff, as appropriate.

Attachment(s):
A. Previously Approved Design Plans (August 18, 2015)
B. Project Design Plans
C. DRAFT Approval Resolution

Report Author and Contact Information:
Cindy Gordon, AICP, Associate Planner
(310) 285-1191
cgordon@beverlyhills.org

**ENVIRONMENTAL ASSESSMENT**

The subject project is exempt from the California Environmental Quality Act (CEQA – Public Resources Code §§21000 – 21178), pursuant to Section 15061(b)(3) of the State CEQA Guidelines in that the project includes the review of building design, colors and materials to the façade of the building, front yard landscaping or minor low-scaled accessory structures, such as fences or walls. It can be seen with certainty that there is no possibility that the subject activity could result in a significant effect on the environment. The project has also been reviewed and found not be a historic resource. The existing improvements to be demolished or altered were not designed by an architect or builder identified on the City's Master Architect list and the site and improvements are not listed on the City's historic resource inventory.

The Architectural Commission previously adopted a Categorical Exemption for the project on August 19, 2015 pursuant to the California Environmental Quality Act; no further environmental review is required at this time.

**PUBLIC OUTREACH AND NOTIFICATION**

Public outreach and notification was not required for this project.

**Attachment A**
Previously Approved Design Plans
(August 18, 2015)

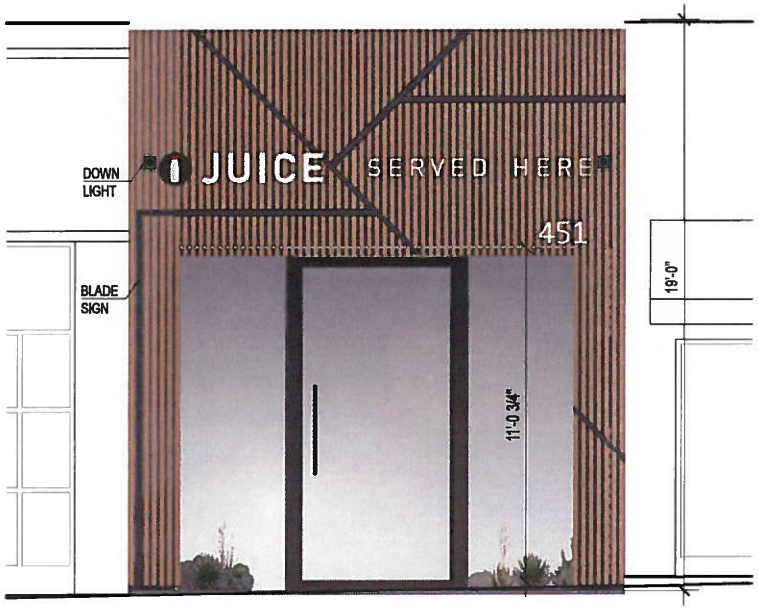


D EXTERIOR ELEVATION
Scale 1/4" = 1'-0"

2 EXTERIOR 3D RENDERING
NTS

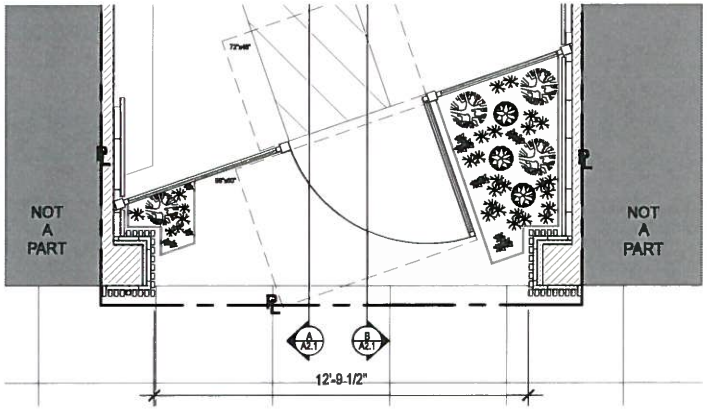


F ENTRANCE PLAN
Scale 1/4" = 1'-0"

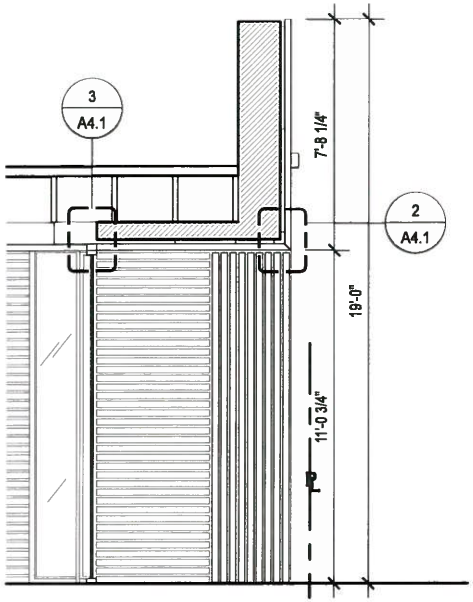


B SECTION B
Scale 1/4" = 1'-0"

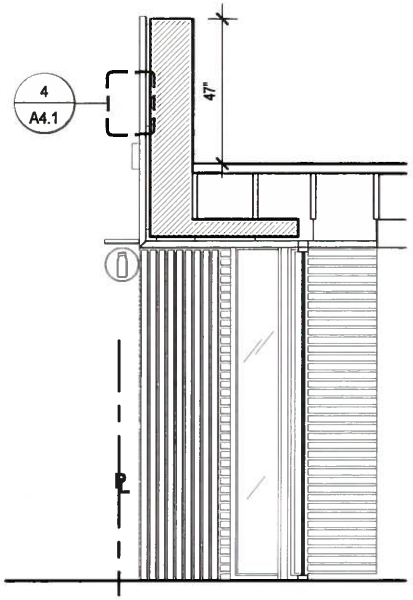


A SECTION A
Scale 1/4" = 1'-0"

AERO COLLECTIVE

1808 LUCILE AVENUE
LOS ANGELES, CA. 90026
626.383.8194

ALL DRAWINGS AND SPECIFICATIONS ARE INSTRUMENTS OF SERVICE AND SHALL REMAIN THE PROPERTY OF THE DESIGN PROFESSIONAL. COPIES OF DRAWINGS AND SPECIFICATIONS RETAINED BY THE CLIENT MAY BE UTILIZED ONLY FOR HIS USE AND FOR OCCUPYING THE PROJECT FOR WHICH THEY WERE PREPARED, AND NOT FOR THE CONSTRUCTION OF ANY OTHER PROJECTS. ANY USE OR REPRODUCTION OF THIS DRAWING IN WHOLE OR IN PART BY ANY MEANS WHATSOEVER IS STRICTLY PROHIBITED EXCEPT WITH WRITTEN CONSENT OF AERO COLLECTIVE

| NO. | ISSUES / REVISIONS | DATE |
|---|---|---|

JUICE SERVED HERE

JUICE SERVED HERE

451 N BEVERLY DR
BEVERLY HILLS, CA 90210
PROJECT # 15015

COLOR ELEVATIONS

ISSUE DATE: 09-04-15

A - 2.1

**Attachment B**
Project Design Plans

APPROVED DESIGN VIEW 1

APPROVED DESIGN VIEW 2

PROPOSED DESIGN VIEW 1

PROPOSED DESIGN VIEW 2

AERO COLLECTIVE

1809 LUCILE AVENUE
LOS ANGELES, CA. 90026
626.383.6194

ALL DRAWINGS AND SPECIFICATIONS ARE INSTRUMENTS OF SERVICE AND SHALL REMAIN THE PROPERTY OF THE DESIGN PROFESSIONAL. COPIES OF DRAWINGS AND SPECIFICATIONS RETAINED BY THE CLIENT MAY BE UTILIZED ONLY FOR HIS USE AND FOR OCCUPYING THE PROJECT FOR WHICH THEY WERE PREPARED, AND NOT FOR THE CONSTRUCTION OF ANY OTHER PROJECTS. ANY USE OR REPRODUCTION OF THIS DRAWING IN WHOLE OR IN PART BY ANY MEANS WHATSOEVER IS STRICTLY PROHIBITED EXCEPT WITH WRITTEN CONSENT OF AERO COLLECTIVE

| NO. | ISSUES / REVISIONS | DATE |
|---|---|---|
| | ARB SUBMITTAL SET | 09/04/15 |
| | REVISED ARB SUBITTAL SET | 11/02/15 |

JUICE SERVED HERE

JUICE SERVED HERE

451 N BEVERLY DR
BEVERLY HILLS, CA 90210
PROJECT # 15015

APPROVED / PROPOSED DESIGN

ISSUE DATE: 11-02-15

A - 0.2

1 BEVERLY BOULEVARD VIEW 1

2 BEVERLY BOULEVARD VIEW 2

AERO COLLECTIVE

1800 LUCILE AVENUE
LOS ANGELES, CA, 90026
626.383.8194

ALL DRAWINGS AND SPECIFICATIONS ARE INSTRUMENTS OF SERVICE AND SHALL REMAIN THE PROPERTY OF THE DESIGN PROFESSIONAL. COPIES OF DRAWINGS AND SPECIFICATIONS RETAINED BY THE CLIENT MAY BE UTILIZED ONLY FOR HIS USE AND FOR OCCUPYING THE PROJECT FOR WHICH THEY WERE PREPARED, AND NOT FOR THE CONSTRUCTION OF ANY OTHER PROJECTS. ANY USE OR REPRODUCTION OF THIS DRAWING IN WHOLE OR IN PART BY ANY MEANS WHATSOEVER IS STRICTLY PROHIBITED EXCEPT WITH WRITTEN CONSENT OF AERO COLLECTIVE

| NO. | ISSUES / REVISIONS | DATE |
|---|---|---|
| | ARB SUBMITTAL SET | 09/04/15 |
| | REVISED ARB SUBMITTAL SET | 11/02/15 |

JUICE SERVED HERE

JUICE SERVED HERE

451 N BEVERLY DR
BEVERLY HILLS, CA 90210
PROJECT # 15015

3D RENDERING

ISSUE DATE: 11-02-15

A - 0.4

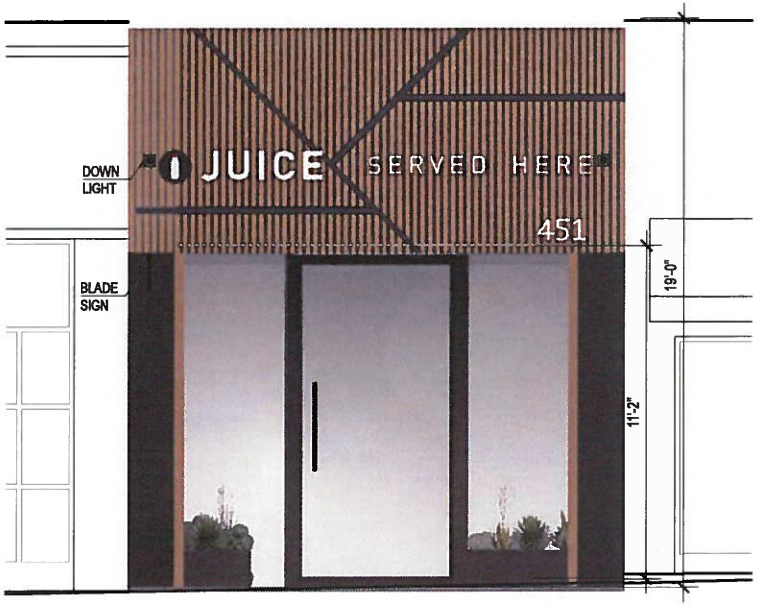


5 EXTERIOR ELEVATION
Scale 1/4" = 1'-0"

NOTE: TOTAL EXTERIOR IS 306 SF. DECORATIVE WOOD SLATS ARE 125 SF. 40%

3 EXTERIOR 3D RENDERING
NTS

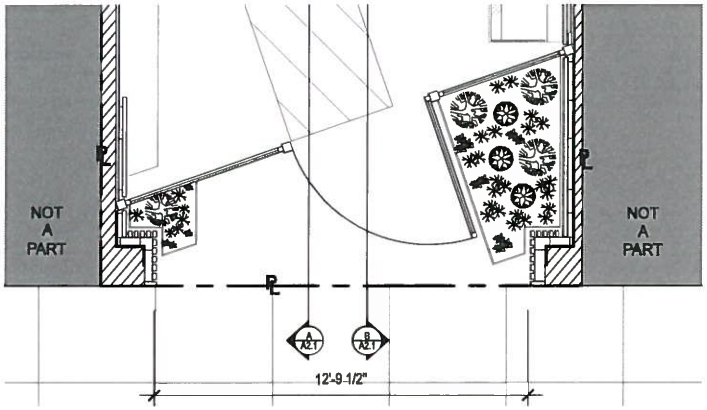


4 ENTRANCE PLAN
Scale 1/4" = 1'-0"

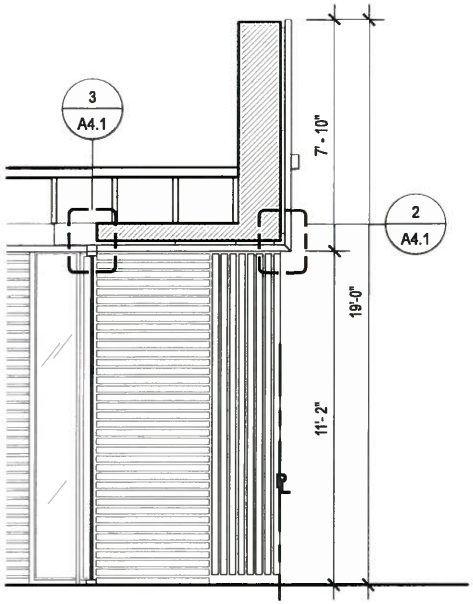


2 SECTION B
Scale 1/4" = 1'-0"

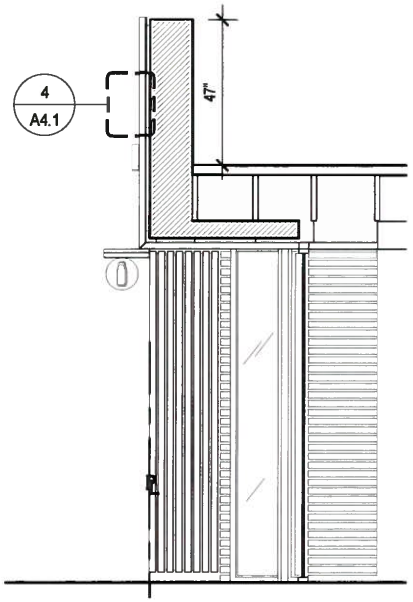


1 SECTION A
Scale 1/4" = 1'-0"

AERO COLLECTIVE

1800 LUCILE AVENUE
LOS ANGELES, CA. 90026
626.383.8194

ALL DRAWINGS AND SPECIFICATIONS ARE INSTRUMENTS OF SERVICE AND SHALL REMAIN THE PROPERTY OF THE DESIGN PROFESSIONAL. COPIES OF DRAWINGS AND SPECIFICATIONS RETAINED BY THE CLIENT MAY BE UTILIZED ONLY FOR THIS USE AND FOR OCCUPYING THE PROJECT FOR WHICH THEY WERE PREPARED, AND NOT FOR THE CONSTRUCTION OF ANY OTHER PROJECTS. ANY USE OR REPRODUCTION OF THIS DRAWING IN WHOLE OR IN PART BY ANY MEANS WHATSOEVER IS STRICTLY PROHIBITED EXCEPT WITH WRITTEN CONSENT OF AERO COLLECTIVE

| NO. | ISSUES / REVISIONS | DATE |
|---|---|---|
| | ARB SUBMITTAL SET | 09/04/15 |
| | REVISED ARB SUBITTAL SET | 11/02/15 |

JUICE SERVED HERE

JUICE SERVED HERE

451 N BEVERLY DR
BEVERLY HILLS, CA 90210
PROJECT # 15015

COLOR ELEVATIONS

ISSUE DATE: 11-02-15

A - 2.1

**Attachment C**

DRAFT Approval Resolution

RESOLUTION NO. AC-XX-15

RESOLUTION OF THE ARCHITECTURAL COMMISSION OF THE CITY OF BEVERLY HILLS CONDITIONALLY APPROVING AN ARCHITECTURAL REVIEW PERMIT FOR A REVISION TO A PREVIOUSLY APPROVED FAÇADE REMODEL AND LANDSCAPING FOR THE PROPERTY LOCATED AT 451 NORTH BEVERLY DRIVE (PL1511173 – JUICE SERVED HERE).

The Architectural Commission of the City of Beverly Hills hereby finds, resolves and determines as follows:

Section 1. Kirsten Bunger, Juice Served Here, agent, on behalf of the property owner, Hershenson Investments LLC, and the tenant, Juice Served Here, (Collectively the "Applicant"), has applied for architectural approval for a revision to a previously approved façade remodel and landscaping for the property located at 451 North Beverly Drive.

Section 2. Beverly Hills Municipal Code Article 30, Chapter 3 of Title 10, authorizes the Architectural Commission the authority to approve, approve with conditions or deny design-related aspects of projects located in the city's commercial and multi-family districts, subject to findings set forth in Beverly Municipal Code Section 10-3-3010.

Section 3. Consistent with Beverly Hills Municipal Code Section 10-3-3010, this resolution documents the official action of the architectural commission with respect to the project.

Section 4. The subject project has been reviewed pursuant to the provisions set forth in the California Environmental Quality Act (CEQA – Public Resource Code Sections 21000, *et seq.*), the State CEQA Guidelines (California Code of Regulations, Title 14, Sections 15000 *et seq.*), and the city's local CEQA Guidelines. The subject project is exempt from the California Environmental Quality Act

(CEQA – Public Resources Code §§21000 – 21178), pursuant to Section 15061(b)(3) of the State CEQA Guidelines in that the project includes the review of building design, colors and materials to the façade of the building, front yard landscaping or minor low-scaled accessory structures, such as fences or walls. It can be seen with certainty that there is no possibility that the subject activity could result in a significant effect on the environment. The project has also been reviewed and found not be a historic resource. The existing improvements to be demolished or altered were not designed by an architect or builder identified on the City's Master Architect list and the site and improvements are not listed on the City's historic resource inventory.

The Architectural Commission previously adopted a Categorical Exemption for the project on August 19, 2015 pursuant to the California Environmental Quality Act; no further environmental review is required at this time.

Section 5. The Architectural Commission conducted a duly noticed public hearing on November 18, 2015 at which time oral and documentary evidence was received concerning the application.

Section 6. Based upon the evidence presented at the hearings, including the staff report(s), oral and written testimony, the Architectural Commission hereby makes the following findings:

A. The plan for the proposed building or structure is in conformity with good taste and good design and, in general, contributes to the image of Beverly Hills as a place of beauty, spaciousness, balance, taste, fitness, broad vistas, and high quality. Specifically the project incorporates an

appropriate balance of color, high quality materials and appropriate architectural design principles to reinforce the city's urban form and promote the image of Beverly Hills.

B. The plan for the proposed building or structure indicates the manner in which the structure is reasonably protected against external and internal noise, vibrations, and other factors which may tend to make the environmental less desirable. The proposed project is proposed to be constructed using contemporary building materials and practices, and, as conditioned, complaint with all applicable building codes, including standards that protect against unwanted noise and vibrations.

C. Proposed building or structure is not, in its exterior design and appearance, of inferior quality such as to cause the nature of the local environment to materially depreciate in appearance and value. Specifically, the commission has reviewed the design and construction materials proposed for the project, which incorporates contemporary building material of known quality and durability. Moreover, the project design is appropriate to the building and surrounding improvements and is well matched to the selected materials.

D. As conditioned, the proposed building or structure is in harmony with the proposed developments on land in the general area, with the general plan for Beverly Hills, and with any precise plans adopted pursuant to the general plan. The proposed project complies with the applicable goals and policies set forth in the general plan, and, as conditioned, designed in a manner that complies with local ordinances. The overall design is consistent with and appropriate to other improvements in the general vicinity.

E. The proposed development is in conformity with the standards of this code and other applicable laws insofar as the location and appearance of the buildings and structures are involved. As, conditioned, the project will be designed in compliance with all applicable regulations.

F. The proposed development is designed in a manner that protects and preserves those exterior elements of the building which the planning commission found contributed to the determination of the project as a "character contributing building": in accordance with section 10-2-707 of this title. The proposed project does not include a request and has not been determined by the planning commission to be a project that qualifies as a "character contributing building" under section 10-2-707. Therefore, this finding is not applicable to the subject project.

Section 7. Based on the foregoing, the Architectural Commission hereby grants the request defined in this resolution subject to the following conditions:

Project-Specific Conditions

No project-specific conditions are proposed.

Standard Conditions

1. **Revised Plan Submittal.** For all projects that are approved with project-specific conditions, a revised plan set that has fully incorporated all such conditions shall be submitted to the project planner, both in hard copy format and in electronic format, prior to submitting for the building permit plan check process.
2. **Architectural Approval**. Project approval is for the design-related aspects of the project only. No approval is implied or granted with regard to applicable city zoning or technical codes, which may require review and approval from other city commissions or officials.

3. **Compliance with Municipal Code**. Prior to issuance of a building permit, the applicant shall demonstrate compliance with all applicable provisions of the city's municipal code and applicable conditions imposed by any discretionary review approval.

4. **Compliance with Special Conditions**. Any special conditions that require approval by the director of community development, or designee, shall be submitted to the staff liaison to the commission within fourteen (14) days of approval or prior to submittal of the plan check review application, whichever is greater.

5. **Project Rendering**. Prior to issuance of a building permit, the applicant shall incorporate into the building permit set of plans, an updated color rendering of all building facades. The quality and detail of the rendering shall be subject to approval from the director of community development, or designee, and shall include sufficient design information to evaluate project compliance during construction.

6. **Approval Resolution**. A copy of the signed resolution of approval shall be scanned onto the cover sheet(s) of the building permit set of plans.

7. **Substantial Compliance with Approved Plans**. The director of community development, or designee, shall determine if changes to the approved project are in substantial compliance with the commission's action. This determination shall be subject to applicable fees and charges. A substantial modification to the approved project requires approval from the Architectural Commission.

8. **Validity of Permits**. The rights granted by this approval shall remain valid for three (3) years from the date of approval, unless extended pursuant to Beverly Hills Municipal Code Section 10-3-207.

Section 8. The Secretary of the Architectural Commission shall certify to the passage, approval, and adoption of this resolution, and shall cause this resolution and its certification to be entered in the administrative record maintained by the community development department.

Section 9. Decisions of the Architectural Commission may be appealed to the City Council within fourteen (14) days of the final action by filling a written appeal and paying appropriate fees with the City of Beverly Hills City Clerk.

Approved as to Form and Content:

Ryan Gohlich, Commission Secretary
Community Development Department

Adopted: November 18, 2015

Andrea Gardner Apatow, Chair
Architectural Commission