City of Beverly Hills
Planning Division
455 N. Rexford Drive Beverly Hills, CA 90210
TEL. (310) 285-1141 FAX. (310) 858-5966

Architectural Commission Report

Meeting Date: Wednesday, May 20, 2015

Subject: **9465 WILSHIRE BOULEVARD (PL1506588)**
Request for approval of a business identification sign program. The Commission will also consider adoption of a Categorical Exemption, pursuant to the California Environmental Quality Act.

Project agent: Gabriel Gonzalez – SAA

Recommendation: Conduct public hearing to discuss the project details and provide the applicant with an approval.

REPORT SUMMARY

The applicant is requesting review and approval of a business identification sign program for the existing commercial building located at 9465 Wilshire Boulevard. Specifically, the sign program will apply to the new storefronts recently remodeled along North Beverly Drive (approved by the Architectural Commission on February 19, 2014).

The sign program provides one-tenant, two-tenant, and three-tenant options to allow for flexibility in the allocation of interior configurations. Each sign is proposed on the gray back-painted glass panels located in between the storefronts.

Additionally, the sign program provides three signage layout options: a logo option, a single line option, and a double line option. The spacing dimensions, letter width, and letter height are identified for each layout option in Attachment B of this report (project design plans). Each sign will consist of non-illuminated, powder-coated stainless steel letters in a matte charcoal color.

Pursuant to Beverly Hills Municipal Code (BHMC) §10-4-604, the maximum allowable sign area for business identification signage for ground floor business with street frontage is two square feet (2 SF) in area for each one foot (1'-0") of ground floor street frontage; however, in no event shall the business identification sign exceed 100 SF in area.

Note: A parking entrance identification sign has been included in the plan set for the business identification sign program. However, as it complies with the standards set forth in BHMC §10-4-652, such sign is not subject to the City's architectural review process and will be approved as a by-right parking identification sign.

URBAN DESIGN ANALYSIS

The proposed business identification sign program presents a clean and simple aesthetic that will complement the new storefronts along North Beverly Drive. The identification of various potential tenant configurations and sign options will allow for flexibility in the program's implementation and

Attachment(s):
A. Detailed Design Description and Materials (Applicant Prepared)
B. Project Design Plans
C. DRAFT Approval Resolution

Report Author and Contact Information:
Cindy Gordon, AICP, Associate Planner
(310) 285-1191
cgordon@beverlyhills.org

allow each tenant to create a defined identity while maintaining consistency that will serve as a positive enhancement to the building and the surrounding streetscape.

ZONING CODE COMPLIANCE

Applications for design review are preliminarily evaluated for compliance with the zoning code. Applicants are encouraged and have the option of requesting a comprehensive review separate and apart from this application. Formal compliance review will occur when a building permit application is filed (plan check). The applicant has been advised that changes during plan check may require revisions and subsequent approval from the Architectural Commission or staff, as appropriate.

ENVIRONMENTAL ASSESSMENT

The subject project is exempt from the California Environmental Quality Act (CEQA – Public Resources Code §§21000 – 21178), pursuant to Section 15061(b)(3) of the State CEQA Guidelines in that the project includes the review of building design, colors and materials to the façade of the building, front yard landscaping or minor low-scaled accessory structures, such as fences or walls. It can be seen with certainty that there is no possibility that the subject activity could result in a significant effect on the environment. The project has also been reviewed and found to be a potential historic resource. However, the project has been designed consistent with the Secretary of the Interior's Standards and is also exempt from the California Environmental Quality Act, pursuant to Section 15331 (Historical Resource Restoration/Rehabilitation) of the State CEQA Guidelines.

PUBLIC OUTREACH AND NOTIFICATION

Public outreach and notification was not required for this project.

Attachment A
Detailed Design Description
and Materials (applicant prepared)

SECTION 2 – PROJECT DESCRIPTION / ZONING INFORMATION

A Indicate Requested Application

☐ Staff Review
- Three (3) sets of plans required (all plan sets must be 11" x 17" in size).

☒ Architectural Commission Review
- Eight (8) sets of plans required (all plan sets must be 11" x 17" in size).
- Public Notice materials required for Sign Accommodations (see Section 5 for public notice requirements).

B Identify the scope of work (check all that apply):

☐ New construction
☐ Façade Remodel ONLY
☒ Business Identification Sign(s)
Number of signs proposed: 4
☐ Building Identification Sign(s)
Number of signs proposed:
☐ Remodel: Int. & Ext, no floor area added
☐ Remodel: Int. & Ext, floor area added
☐ Awning(s): ☐ New ☐ Recovery
☐ Open Air Dining: #Tables ____ # Chairs ____
☐ Sign Accommodation (explain reason for the accommodation request below):
Number of signs proposed:
☐ Other:

C Describe the scope of work proposed including materials and finishes:

1) Adding new business signage to storefront of 9465 Wilshire Blvd. on Beverly side.
2) Adding new "Parking" signage atop existing awning.

D Identify the Project Zoning (City Zoning Map: http://gis.beverlyhills.org/)

☐ R-4	☐ R-4X	☐ R-4	☐ R-4-P	☐ R-4X2
☐ R-3	☐ RMCP	☒ C-3	☐ C-3A	☐ C-3B
☐ C-5	☐ C-3T-1	☐ C-3T-2	☐ C-3T-5	☐ C-5

☐ Other:

E Lot is currently developed with (check all that apply):

☐ General Office Building
☐ Retail Building
☐ Medical Office Building
☐ Multi-family Building
☐ Vacant
☐ Restaurant
☐ Other (specify below):

F Has the existing structure been designed by a notable architect or is it identified on any historic resource inventory, including the City of Beverly Historic Resources Survey (Verify with the Planning Division if the property is listed on the City's survey)?

Yes ☐ No ☐ If yes , please list Architect's name: Victor Gruen

SECTION 3 – PROJECT DETAILS AND MATERIALS (continues on next page)

A Indicate in the chart below all applicable signage details:

	Type of Sign	Quantity	Dimensions	Square Ft	Maximum Area Permitted by Code
1	Business ID Sign(s)	3		Approx. 15	Varies
2	Parking Sign(s)	1		Approx. 15	Varies
3					
4					
5					

B List the specific materials and finishes for all of the architectural features proposed in the project (List N/A, not applicable, for features that do not apply.):

FAÇADE (List all material for all portions visible from the street)

Material: _____

Texture /Finish: _____

Color / Transparency: _____

WINDOWS/DOORS (Include frame, trim, glass, metal, etc.)

Material: _____

Texture /Finish: _____

Color / Transparency: _____

ROOF

Material: _____

Texture /Finish: _____

Color / Transparency: _____

COLUMNS

Material: _____

Texture /Finish: _____

Color / Transparency: _____

BALCONIES & RAILINGS

Material: _____

Texture /Finish: _____

Color / Transparency: _____

OUTDOOR DINING ELEMENTS (List all material for all outdoor dining elements.)

Material: _____

Texture /Finish: _____

Color / Transparency: _____

SECTION 3 – PROJECT DETAILS AND MATERIALS (continued from previous page)

AWNINGS, CANOPIES

Material:
Texture /Finish:
Color / Transparency:

DOWNSPOUTS / GUTTERS

Material:
Texture /Finish:
Color / Transparency:

BUSINESS ID SIGN(S)

Material: Aluminum
Texture /Finish: Brushed
Color / Transparency: N/A

BUILDING ID SIGN(S)

Material:
Texture /Finish:
Color / Transparency:

EXTERIOR LIGHTING

Material:
Texture /Finish:
Color / Transparency:

PAVED SURFACES

Material:
Texture /Finish:
Color / Transparency:

FREESTANDING WALLS AND FENCES

Material:
Texture /Finish:
Color / Transparency:

OTHER DESIGN ELEMENTS

Material:
Texture /Finish:
Color / Transparency:

C Describe the proposed landscape theme, if applicable. Explain how the proposed landscaping complements the proposed style of architecture:

N/A

SECTION 4 – DESIGN ANALYSIS AND FINDINGS (for Commission level applications only)

A Clearly identify how your project adheres to each of the required findings of the Architectural Review Commission:

1. ***Describe*** **how the proposed building or structure is in conformity with good taste and good design and, in general, contributes to the image of Beverly Hills as a place of beauty, spaciousness, balance, taste, fitness, broad vistas and high quality.**

The signage proposed will use a simple font and not detract from the building or surroundings in a negative way.

2. ***Describe*** **how the proposed building or structure indicates the manner in which the structure is reasonably protected against external and internal noise, vibrations, and other factors which may tend to make the environment less desirable.**

N/A

3. ***Describe*** **how the proposed building or structure is not, in its exterior design and appearance, of inferior quality such as to cause the nature of the local environment to materially depreciate in appearance and value.**

The signage proposed will use a simple font and not detract from the building or surroundings in a negative way.

4. ***Describe*** **how the proposed building or structure is in harmony with the proposed developments on land in the general area, with the general plan for Beverly Hills, and with any precise plans adopted pursuant to the general plan.**

The signage proposed will use a simple font and not detract from the building or surroundings in a negative way.

5. ***Describe*** **how the proposed development is in conformity with the standards of the municipal code and other applicable laws insofar as the location and appearance of the buildings and structures are involved.**

The signage proposed has been reviewed by the Planning Department of Beverly Hills beforehand and preliminarily approved to move forward to the Architectural Commission.

Attachment B
Project Design Plans

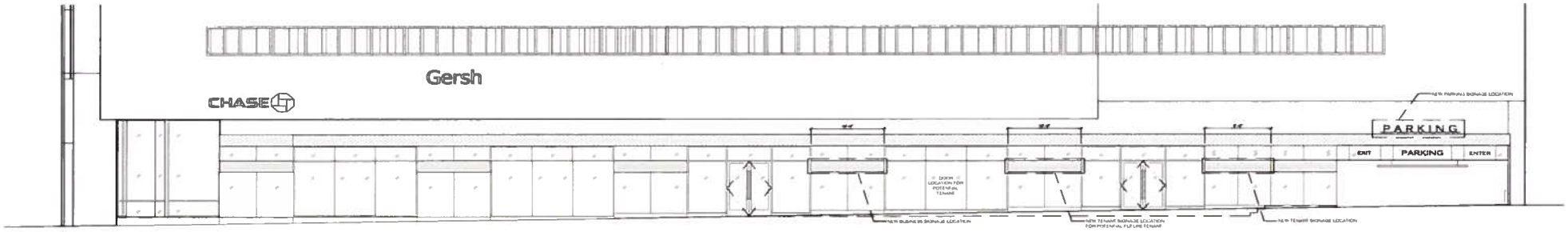

THREE TENANTS

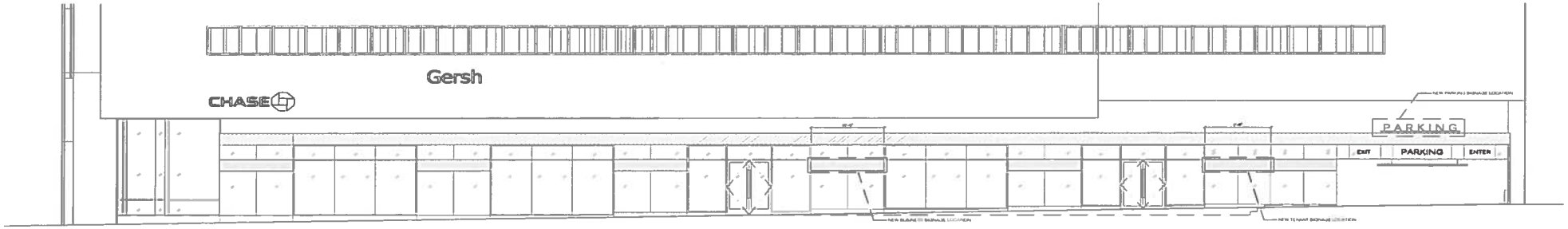

TWO TENANTS

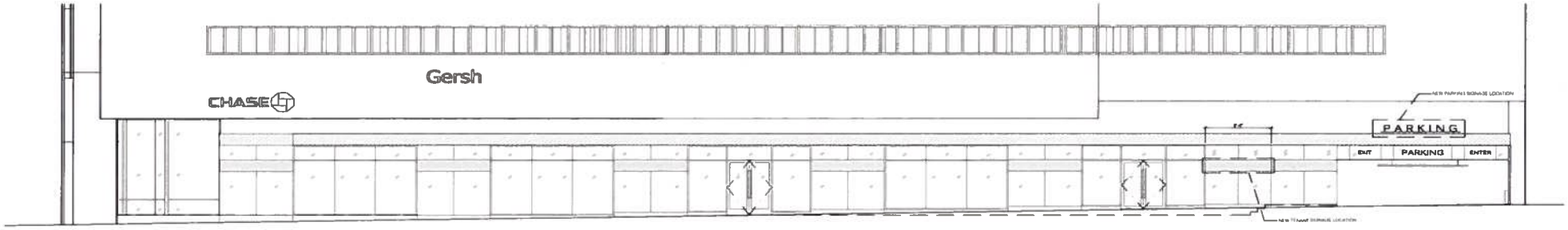

ONE TENANT

TENANT SIGNAGE ALLOCATION

saa

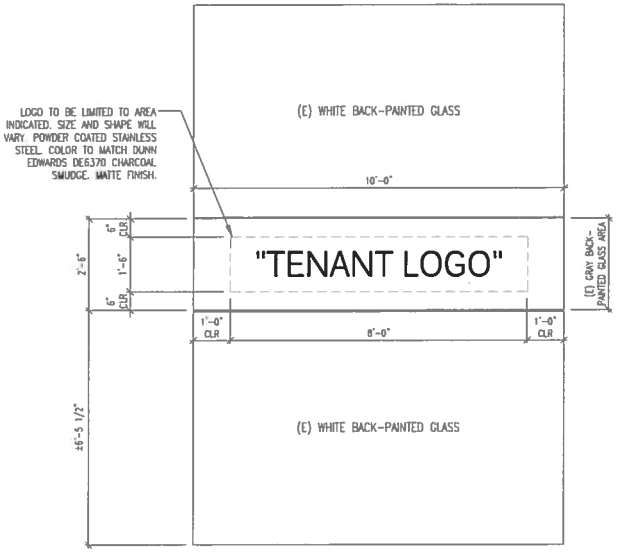

LOGO OPTION

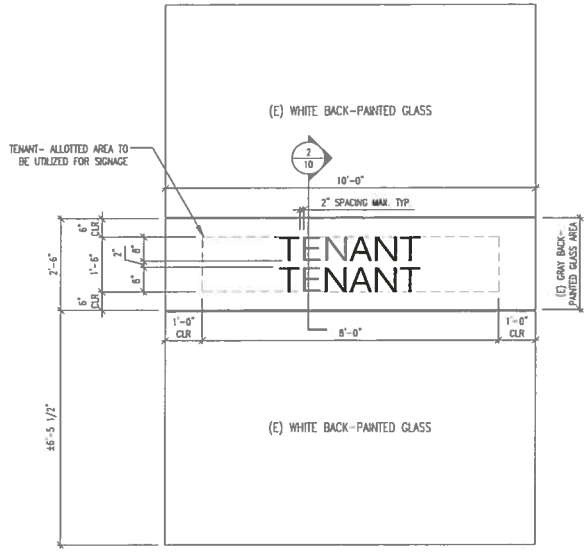

DOUBLE TEXT OPTION

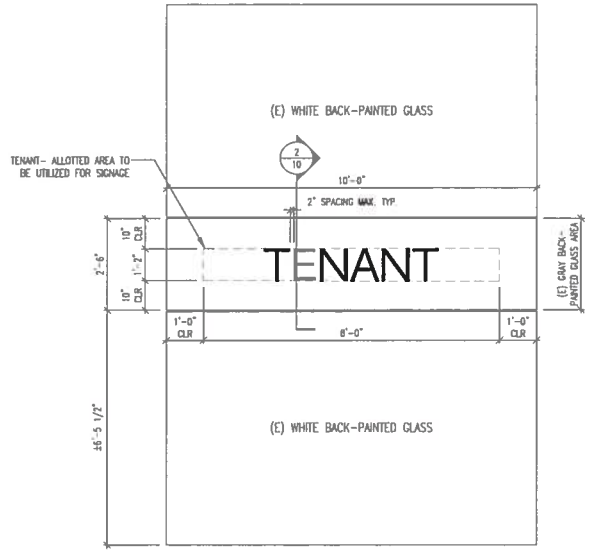

SINGLE TEXT OPTION

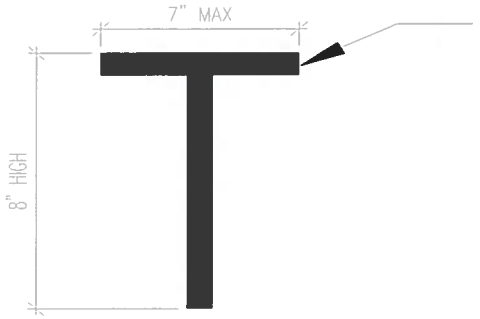

LASER CUT 1" THICK FLAT POWDER COATED STAINLESS STEEL DIMENSIONAL LETTERING. COLOR TO MATCH DUNN EDWARDS DE6370 CHARCOAL SMUDGE. MATTE FINISH. AVENIR FONT STYLE. MAXIMUM HEIGHT NOT TO EXCEED 7" FOR "DOUBLE TEXT" OPTION. WIDTH OF LETTERING NOT TO EXCEED 7". ALL EDGES TO BE GROUND SMOOTH. EXPOY TO EXISTING GLASS SURFACE.

8" DIMENSIONAL LETTERING SPECIFICATION

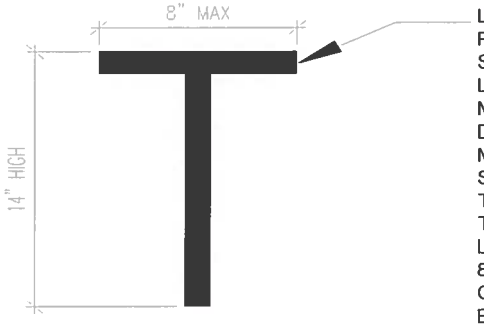

LASER CUT 1" THICK FLAT POWDER COATED STAINLESS STEEL DIMENSIONAL LETTERING. COLOR TO MATCH DUNN EDWARDS DE6370 CHARCOAL SMUDGE. MATTE FINISH. AVENIR FONT STYLE. MAXIMUM HEIGHT NOT TO EXCEED 14" FOR SINGLE TEXT OPTION. WIDTH OF LETTERING NOT TO EXCEED 8". ALL EDGES TO BE GROUND SMOOTH. EXPOY TO EXISTING GLASS SURFACE.

14" DIMENSIONAL LETTERING SPECIFICATION

TENANT SIGNAGE LAYOUT FOR 10'-0" WIDE GLASS

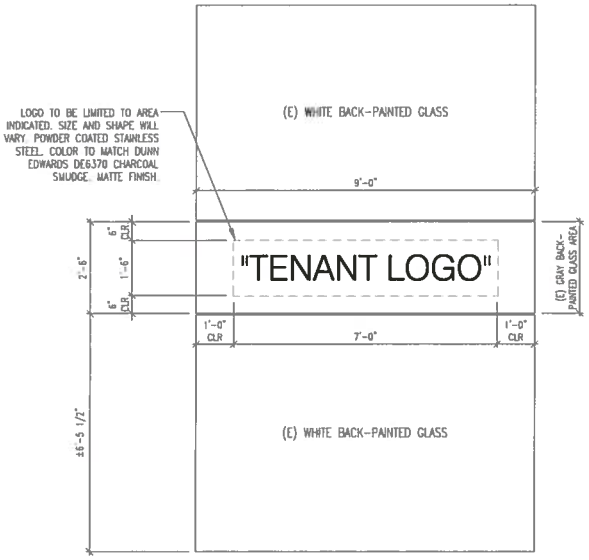

LOGO OPTION

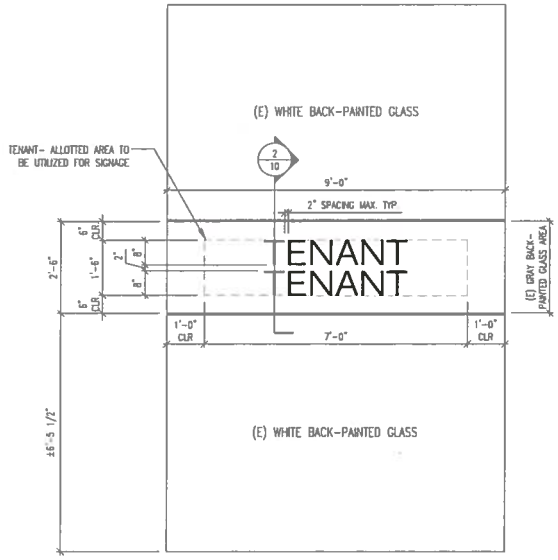

DOUBLE TEXT OPTION

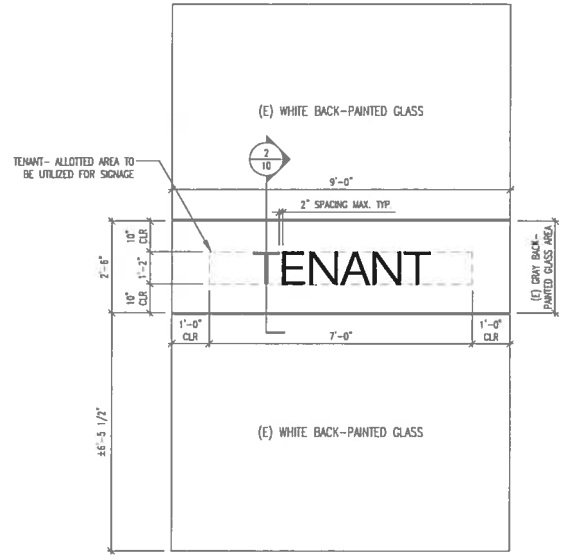

SINGLE TEXT OPTION

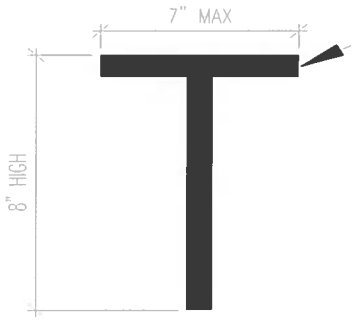

LASER CUT 1" THICK FLAT POWDER COATED STAINLESS STEEL DIMENSIONAL LETTERING. COLOR TO MATCH DUNN EDWARDS DE6370 CHARCOAL SMUDGE. MATTE FINISH. AVENIR FONT STYLE. MAXIMUM HEIGHT NOT TO EXCEED 7" FOR "DOUBLE TEXT" OPTION. WIDTH OF LETTERING NOT TO EXCEED 7". ALL EDGES TO BE GROUND SMOOTH. EXPOY TO EXISTING GLASS SURFACE.

8" DIMENSIONAL LETTERING SPECIFICATION

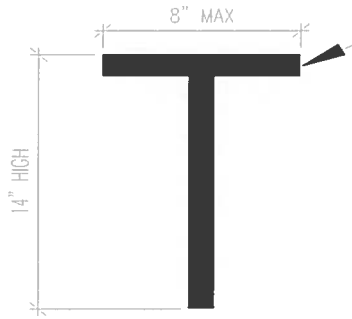

LASER CUT 1" THICK FLAT POWDER COATED STAINLESS STEEL DIMENSIONAL LETTERING. COLOR TO MATCH DUNN EDWARDS DE6370 CHARCOAL SMUDGE. MATTE FINISH. AVENIR FONT STYLE. MAXIMUM HEIGHT NOT TO EXCEED 14" FOR SINGLE TEXT OPTION. WIDTH OF LETTERING NOT TO EXCEED 8". ALL EDGES TO BE GROUND SMOOTH. EXPOY TO EXISTING GLASS SURFACE.

14" DIMENSIONAL LETTERING SPECIFICATION

TENANT SIGNAGE LAYOUT FOR 9'-0" WIDE GLASS

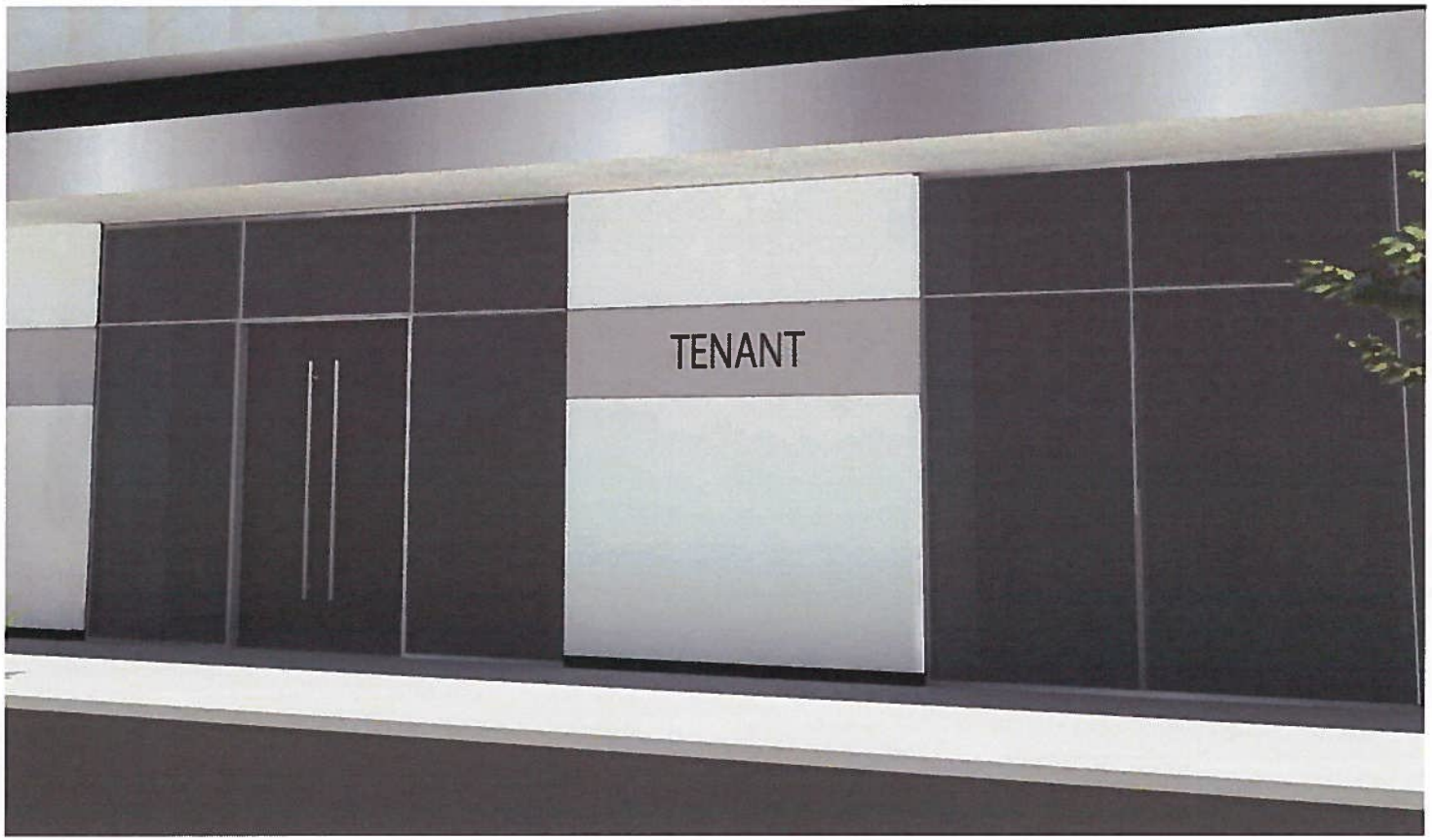

RENDERING OF TYPICAL TENANT SIGNAGE

Attachment C

DRAFT Approval Resolution

RESOLUTION NO. AC-XX-15

RESOLUTION OF THE ARCHITECTURAL COMMISSION OF THE CITY OF BEVERLY HILLS CONDITIONALLY APPROVING AN ARCHITECTURAL REVIEW PERMIT FOR A BUSINESS IDENTIFICATION SIGN PROGRAM FOR THE PROPERTY LOCATED AT 9465 WILSHIRE BOUELVARD (PL1506588)

The Architectural Commission of the City of Beverly Hills hereby finds, resolves and determines as follows:

Section 1. Gabriel Gonzalez, SAA, agent, on behalf of the property owner, Lincoln Property Management, (Collectively the "Applicant"), has applied for architectural approval for a business identification sign program for the property located at 9465 Wilshire Boulevard.

Section 2. Beverly Hills Municipal Code Article 30, Chapter 3 of Title 10, authorizes the Architectural Commission the authority to approve, approve with conditions or deny design-related aspects of projects located in the city's commercial and multi-family districts, subject to findings set forth in Beverly Municipal Code Section 10-3-3010.

Section 3. Consistent with Beverly Hills Municipal Code Section 10-3-3010, this resolution documents the official action of the architectural commission with respect to the project.

Section 4. The subject project is exempt from the California Environmental Quality Act (CEQA – Public Resources Code §§21000 – 21178), pursuant to Section 15061(b)(3) of the State CEQA Guidelines in that the project includes the review of building design, colors and materials to the façade of the building, front yard landscaping or minor low-scaled accessory structures, such as fences or walls. It can be seen with certainty that there is no possibility that the subject activity could result in a

significant effect on the environment. The project has also been reviewed and found to be a potential historic resource. However, the project has been designed consistent with the Secretary of the Interior's Standards and is also exempt from the California Environmental Quality Act, pursuant to Section 15331 (Historical Resource Restoration/Rehabilitation) of the State CEQA Guidelines.

Section 5. The Architectural Commission conducted a duly noticed public hearing on May 20, 2015 at which time oral and documentary evidence was received concerning the application.

Section 6. Based upon the evidence presented at the hearings, including the staff report(s), oral and written testimony, the Architectural Commission hereby makes the following findings:

A. The plan for the proposed building or structure is in conformity with good taste and good design and, in general, contributes to the image of Beverly Hills as a place of beauty, spaciousness, balance, taste, fitness, broad vistas, and high quality. Specifically the project incorporates an appropriate balance of color, high quality materials and appropriate architectural design principles to reinforce the city's urban form and promote the image of Beverly Hills.

B. The plan for the proposed building or structure indicates the manner in which the structure is reasonably protected against external and internal noise, vibrations, and other factors which may tend to make the environmental less desirable. The proposed project is proposed to be constructed using contemporary building materials and practices, and, as conditioned, complaint with all applicable building codes, including standards that protect against unwanted noise and vibrations.

C. Proposed building or structure is not, in its exterior design and appearance, of inferior quality such as to cause the nature of the local environment to materially depreciate in appearance and value. Specifically, the commission has reviewed the design and construction materials proposed for the project, which incorporates contemporary building material of known quality and durability. Moreover, the project design is appropriate to the building and surrounding improvements and is well matched to the selected materials.

D. As conditioned, the proposed building or structure is in harmony with the proposed developments on land in the general area, with the general plan for Beverly Hills, and with any precise plans adopted pursuant to the general plan. The proposed project complies with the applicable goals and policies set forth in the general plan, and, as conditioned, designed in a manner that complies with local ordinances. The overall design is consistent with and appropriate to other improvements in the general vicinity.

E. The proposed development is in conformity with the standards of this code and other applicable laws insofar as the location and appearance of the buildings and structures are involved. As, conditioned, the project will be designed in compliance with all applicable regulations.

F. The proposed development is designed in a manner that protects and preserves those exterior elements of the building which the planning commission found contributed to the determination of the project as a "character contributing building": in accordance with section 10-2-707 of this title. The proposed project does not include a request and has not been determined by the planning commission to be a project that qualifies as a "character contributing building" under section 10-2-707. Therefore, this finding is not applicable to the subject project.

Section 7. Based on the foregoing, the Architectural Commission hereby grants the request defined in this resolution subject to the following conditions:

Project-Specific Conditions

No project-specific conditions are proposed.

Standard Conditions

1. **Revised Plan Submittal.** For all projects that are approved with project-specific conditions, a revised plan set that has fully incorporated all such conditions shall be submitted to the project planner, both in hard copy format and in electronic format, prior to submitting for the building permit plan check process.
2. **Architectural Approval**. Project approval is for the design-related aspects of the project only. No approval is implied or granted with regard to applicable city zoning or technical codes, which may require review and approval from other city commissions or officials.

3. **Compliance with Municipal Code**. Prior to issuance of a building permit, the applicant shall demonstrate compliance with all applicable provisions of the city's municipal code and applicable conditions imposed by any discretionary review approval.

4. **Compliance with Special Conditions**. Any special conditions that require approval by the director of community development, or designee, shall be submitted to the staff liaison to the commission within fourteen (14) days of approval or prior to submittal of the plan check review application, whichever is greater.

5. **Project Rendering**. Prior to issuance of a building permit, the applicant shall incorporate into the building permit set of plans, an updated color rendering of all building facades. The quality and detail of the rendering shall be subject to approval from the director of community development, or designee, and shall include sufficient design information to evaluate project compliance during construction.

6. **Approval Resolution**. A copy of the signed resolution of approval shall be scanned onto the cover sheet(s) of the building permit set of plans.

7. **Substantial Compliance with Approved Plans**. The director of community development, or designee, shall determine if changes to the approved project are in substantial compliance with the commission's action. This determination shall be subject to applicable fees and charges. A substantial modification to the approved project requires approval from the Architectural Commission.

8. **Validity of Permits**. The rights granted by this approval shall remain valid for three (3) years from the date of approval, unless extended pursuant to Beverly Hills Municipal Code Section 10-3-207.

Section 8. The Secretary of the Architectural Commission shall certify to the passage, approval, and adoption of this resolution, and shall cause this resolution and its certification to be entered in the administrative record maintained by the community development department.

Section 9. Decisions of the Architectural Commission may be appealed to the City Council within fourteen (14) days of the final action by filling a written appeal and paying appropriate fees with the City of Beverly Hills City Clerk.

Approved as to Form and Content:

Adopted: May 20, 2015

William Crouch, Commission Secretary
Community Development Department

Barry Bernstein, Chair
Architectural Commission