AGENDA REPORT

Meeting Date: October 16, 2007

Item Number: E-2

To: Honorable Mayor & City Council

From: Sam Lee, Plan Review Manager
George Chavez, City Building Official
Ralph Mundell, Fire Marshal

Subject: AN ORDINANCE OF THE CITY OF BEVERLY HILLS AMENDING THE UNIFORM ADMINISTRATIVE CODE, 1997 EDITION AND ADOPTING BY REFERENCE THE 2007 CALIFORNIA BUILDING CODE, AND AMENDMENTS THERETO; THE 2007 CALIFORNIA ELECTRICAL CODE, AND AMENDMENTS THERETO; THE 2007 CALIFORNIA MECHANICAL CODE, AND AMENDMENTS THERETO; THE 2007 CALIFORNIA PLUMBING CODE, AND AMENDMENTS THERETO; THE UNIFORM SWIMMING POOL, SPA AND HOT TUB CODE, 2006 EDITION, AND AMENDMENTS THERETO; THE CALIFORNIA ENERGY CODE, 2007 EDITION; THE 2007 CALIFORNIA FIRE CODE, AND AMENDMENTS THERETO; AND AMENDING PORTIONS OF TITLE 9 OF THE BEVERLY HILLS MUNICIPAL CODE

Attachments:

1. Ordinance

RECOMMENDATION

Staff recommends that the City Council adopt the attached Ordinance. If adopted after the second reading, scheduled for November 13, 2007, the Ordinance will go into effect on the 31st day after its passage on December 14, 2007. The Resolution adopting the

findings for the City amendments to the California Building Standards Code (CBSC), which will be submitted at the second reading of the Ordinance, must be adopted prior to adoption of the Ordinance.

INTRODUCTION

The attached Ordinance provides for adoption of the latest edition of the California Building Standards Code (which encompasses the Building, Mechanical, Plumbing, Energy, Electrical and Fire codes), re-adopts many of the City amendments currently in place, adds additional administrative and seismic provisions and deletes those deemed unnecessary because they can now be handled by the unamended code.

The California Health and Safety Code allow cities to amend the CBSC when deemed necessary and reasonable because of local climatic, geological or topographical conditions, as long as the amendments are more restrictive than the unamended CBSC.

BACKGROUND

The California Building Standards Commission is responsible for the adoption of the latest model codes every three years. After review and input by various state agencies and other interested parties, public hearings are held by the Commission, which ultimately amends and adopts the selected model codes under the title, California Building Standards Code. Absent a local ordinance adopting and amending the CBSC, the CBSC, without City amendments, would automatically become effective within the City on January 1, 2008. Thus if the City is to retain local amendments deemed important to the health, safety, and welfare of its residents and visitors (some examples of these amendments are requirements pertaining to fire sprinklers, class A non-wood roof and higher seismic design standards), it is necessary to adopt the attached Ordinance to become effective prior to January 1, 2008.

Added to the administrative amendments is a new provision that requires building owners to provide tenants a habitable place to live during a construction project. Among other

things, this amendment requires owners to submit construction means and methods plan, notify tenants, provide security, and in some cases relocate tenants during construction.

The Ordinance also contains structural design amendments. In a continuing effort to create uniformity of codes and regulations in the Los Angeles (LA) region, many of the LA Basin Chapter Structural Code Committee's recommendations have been added. These amendments have been adopted by most of the 85 other jurisdictions throughout the Southern California region and reflect recommendations by the Structural Engineering Association of Southern California and the Los Angeles Task Force that investigated the poor building performance observed in the 1994 Northridge Earthquake.

Lastly, the new code editions numbering system compel the need to revise the current municipal code amendments to correspond to the new codes format. Thus, many of the City's existing amendments were re-adopted under the new numbering system.

FISCAL IMPACT

No financial impact is anticipated.

Dale T. Geldert,
Fire Chief
Approved By

For VB
Vincent P. Bertoni,
Director of Community Development
Approved By

ORDINANCE NO. 07-O-_____

AN ORDINANCE OF THE CITY OF BEVERLY HILLS AMENDING THE UNIFORM ADMINISTRATIVE CODE, 1997 EDITION AND ADOPTING BY REFERENCE THE 2007 CALIFORNIA BUILDING CODE, AND AMENDMENTS THERETO; THE 2007 CALIFORNIA ELECTRICAL CODE, AND AMENDMENTS THERETO; THE 2007 CALIFORNIA MECHANICAL CODE, AND AMENDMENTS THERETO; THE 2007 CALIFORNIA PLUMBING CODE, AND AMENDMENTS THERETO; THE UNIFORM SWIMMING POOL, SPA AND HOT TUB CODE, 2006 EDITION, AND AMENDMENTS THERETO; THE CALIFORNIA ENERGY CODE, 2007 EDITION; THE 2007 CALIFORNIA FIRE CODE, AND AMENDMENTS THERETO; AND AMENDING PORTIONS OF TITLE 9 OF THE BEVERLY HILLS MUNICIPAL CODE

THE CITY COUNCIL OF THE CITY OF BEVERLY HILLS DOES ORDAIN AS FOLLOWS:

Section 1. Sections 302.2.2, 302.2.3, 302.2.4, 302.2.5, 302.2.6, 302.2.7 and 302.2.8 are hereby added to the Uniform Administrative Code as follows:

Section 302.2.2 is hereby added to the Uniform Administrative Code as follows:
Section 302.2.2 Construction means and method plan required.

(a) When applying for a permit to alter, repair, or rehabilitate any structure that contains one or more dwelling units, the applicant shall indicate on a form furnished by the City Building Official whether the property is occupied by tenants.

(b) If the property is tenant-occupied and, as determined by the City Building Official, the construction work could impact the habitability of any unit on the property, prior to obtaining a permit, the applicant shall submit a construction means and method plan to the City Building Official which contains the information required by this Section. The construction could impact unit habitability if any of the following conditions may exist at the property for a period exceeding one working day:

(1) Inadequate sanitation including, but not limited to, the following:

(A) Lack of, or improper water closet, lavatory, or bathtub or shower,

(B) Lack of, or improper kitchen sink,

(C) Lack of hot and cold running water to plumbing fixtures,

(D) Lack of adequate heating,

(E) Lack of, or improper operation of required ventilating equipment,

(F) Lack of minimum amounts of natural light and ventilation required by the Building Code of the City of Beverly Hills,

(G) Lack of required electrical lighting,

(H) Dampness of habitable rooms,

(1) Lack of connection to required sewage disposal system;

(2) Structural hazards including, but not limited to, the following:

(A) Deteriorated or inadequate foundations,

(B) Defective or deteriorated flooring or floor supports,

(C) Any of the following structural features that are of insufficient size to carry imposed loads with safety: Flooring or floor supports, members of walls, partitions, or other vertical supports, members of ceiling, roofs, ceiling and roof supports, or other horizontal members;

(3) Wiring, plumbing, or electrical equipment that will no longer conform with all applicable laws in effect at the time of installation;

(4) Faulty weather protection, including, but not limited to, the following: ineffective waterproofing of exterior walls, roof, foundations or floors, including broken windows or doors;

(5) The building, premises, or portion thereof, device, apparatus, equipment, combustible waste or vegetation is in such a condition as to cause a fire or explosion or provide a ready fuel to augment the spread and intensity of fire or explosion arising from any cause;

(6) The building or portion thereof is an unsafe building as defined by the Building Code of the City of Beverly Hills;

(7) The building, premises or portions thereof is not provided with adequate exit facilities as required by the Building Code and Fire Code of the City of Beverly Hills;

(8) The building or portions thereof is not provided with the fire-resistive construction or fire-extinguishing systems or equipment required by the Building Code of the City of Beverly Hills and the Fire Code of the City of Beverly Hills.

(c) No permit shall issue until a satisfactory means and method plan is approved by the City Building Official, if required.

(d) If a construction means and method plan was not required prior to permit issuance, the City Building Official shall require a construction means and method plan be submitted after work commences if the City Building Official determines that the work could impact the habitability of any unit on the property given the manner in which the construction is being undertaken. If the City Building Official requires a construction means and method plan, the requirements of this Section shall also apply. The City Building Official may stop construction until all applicable requirements of this Chapter have been met.

Section 302.2.3 is hereby added to the Uniform Administrative Code as follows:
Section 302.2.3 Contents of construction means and method plan.

The construction means and method plan required by subsection (b) of Section 302.2.2 shall provide the following information:

(a) A detailed description of the construction process, organized sequentially;

(b) An explanation of the impact that this construction will have on the occupancy of the units by tenants;

(c) The owner's plan to address the habitability impacts on the tenants created by the proposed construction project;

(d) An assessment of whether any or all of the tenants will need to be temporarily relocated during any phase of the work. A tenant will need to be temporarily relocated if the conditions of the property or the repair or rehabilitation thereof will render the premises unsafe for continued occupancy;

(e) A description of the construction mitigation measures that the owner will implement to minimize the impacts of noise, dust, vibrations, utility shut-offs, and other construction impacts on tenants.

Section 302.2.4 is hereby added to the Uniform Administrative Code as follows:
Section 302.2.4 Relocation plan.

If the construction means and method plan demonstrates, as determined by the City Building Official, that the work being performed on the property may require that tenants be temporarily relocated, the applicant shall also prepare and submit a relocation plan for City approval prior to issuance of a permit which shall contain facts sufficient to show that:

(a) Fair and reasonable relocation benefits will be provided to all displaced tenants as required;

(b) Notice of the relocation assistance and benefits to be provided and the timing of the displacement will be provided to all tenants who will be displaced.

Section 302.2.5 is hereby added to the Uniform Administrative Code as follows:
Section 302.2.5 Tenant noticing requirements.

(a) Before a permit can be issued for the alteration/repair/rehabilitation of a building which required an applicant to prepare a construction means and method plan pursuant to Section 302.2.2 of this Chapter, the applicant must certify that all tenants of the property will receive the information required by subsection (b) of this Section, in a form approved by the City, within ten days following the issuance of the permit and that no work will commence under the permit until ten days after all tenants are notified. This notice shall either be hand-delivered to each tenant of the property or sent by certified mail, return receipt requested.

(b) The notice required by subsection (a) of this Section shall contain the following information:

(1) A detailed description of the nature and type of construction activity that will be undertaken;

(2) Information regarding the scheduling of construction and the periods in which services such as laundry, parking, elevators, water and power, will be unavailable;

(3) A statement that the construction being undertaken at the property will not terminate the tenant's tenancy;

(4) A statement informing the tenants of their right to seek mitigation from the property owner for nuisance conditions at the property, including, but not limited to, noise, dust, vibrations, utility shut-offs and other construction impacts. Mitigation measures may include, but are not limited to, temporary rent reductions, quiet office space for tenants working at home and temporary accommodations;

(5) A statement informing tenants of their right to review and receive free copies of the owner's construction means and method plan;

(6) A statement informing tenants of their right to review and receive free copies of the owner s relocation plan, if such plan was required;

(7) Information explaining how to contact the project applicant, including the designation of a project manager responsible for responding to tenant inquiries, complaints, and requests for mitigation of nuisance conditions;

(8) A statement informing tenants that they should immediately contact the City's Building and Safety Division regarding any conditions at the property which they consider to be unsafe, in violation of the City's Technical Codes, or in violation of the applicant's construction means and method plan;

(9) For construction projects that exceed thirty days in duration as measured from the date that construction commences, the applicant shall also inform the tenants that the applicant will provide twice monthly notices to the tenants regarding the progress of construction and will schedule monthly meetings to address the construction progress and obtain tenant input and feedback regarding the construction;

(10) Any other information that the City Building Official determines is necessary due to the unique circumstances of the construction work.

(c) In addition to the information required by subsection (b) of this Section, the tenant notification shall provide the following information if the project will require the temporary relocation of tenants:

A statement that the construction activity may require displacement, but that to the greatest extent practicable, no tenant lawfully occupying the property will be required to move without at least thirty days written notice from the owner.

Section 302.2.6 is hereby added to the Uniform Administrative Code as follows:
Section 302.2.6 Security.

Before receiving a permit for a project which requires an applicant to prepare a construction means and method plan pursuant to Section 302.2.2 of this Chapter, the applicant shall furnish security to the City sufficient to ensure the timely and faithful performance of all work included within the scope of the permit and the payment of all relocation assistance necessitated by the temporary displacement of the tenants, if any. The City Building Official may exempt a project from the security requirements of this Section if the City Building Official determines such security is unnecessary based on an analysis of the following factors: size of project, duration of project, potential for impact on tenant safety, and invasiveness of project. If required, a Cash Bonds are acceptable forms of security.

Section 302.2.7 is hereby added to the Uniform Administrative Code as follows:
Section 302.2.7 Compliance with required means and method plan.

(a) General. No person shall erect, construct, enlarge, alter, repair, move, improve, remove, sandblast or convert the use of any building, structure or building service equipment regulated by this code without complying with all conditions of any required construction means and methods plan.

(b) Owner's Responsibility. The property owner shall remain responsible for any violation of the construction means and method plan regardless of the responsibility of any other person for the violation or any contract or agreement the owner entered into with a third party concerning the owner' s property or the construction that necessitated the preparation of the means and method plan.

Section 302.2.8 is hereby added to the Uniform Administrative Code as follows:
Section 302.2.8 Administrative regulations.

The City Building Official shall have the authority to promulgate and or adopt administrative regulations to implement the provisions of this Chapter.

Section 2. Sections 304.2 and 304.3 of the Uniform Administrative Code are hereby amended as follows:

Section 304.2 of the Uniform Administrative Code is hereby amended as follows:

Section 304.2 Permit Fee. The permit fees and fees for extensions of permits shall be established by resolution of the City Council.

In addition to the permit fees, if buildings or structures are required to meet energy, sound insulation standards and/or seismic zone standards as mandated by the State, then the Building Official shall collect a fee in the amount established by resolution of the City Council Resolution.

Section 304.3 of the Uniform Administrative Code is hereby amended as follows.
Section 304.3 Plan Review Fee. When a plan review is required, a plan review fee shall be paid at the time of submitting plans and specifications for review. The plan review fee shall be those fees established by resolution of the City Council. Additional review fees may be assessed for changes and revisions to the plans beyond those required to address the plan review corrections and for those changes

made after issuance of the permit. Applications for extension of the plan review expiration date, which are submitted in accordance with Section 304.4 shall be accompanied by payment of fees.

In addition to the plan check fee, where buildings or structures are required to meet energy, sound insulation and/or seismic zone standards as mandated by the State, then the Building Official shall collect a fee in the amount established by resolution of the City Council.

When the Building Official determines that the construction or work poses a hazard or that the nature of the construction or work requires a degree of specialized knowledge, skill, or experience beyond that possessed by any regular employee of the City, or when there differences of opinions between the department staff and the project's consultants, the Building Official may employ a consultant or consultants. The owner, or his agents, shall pay to the City all direct and indirect costs of such consultants and shall maintain a cash deposit with the City at all times in a sufficient amount for the purpose of paying such costs.

Section 3. Section 305.9 is hereby added to the Uniform Administrative Code as follows:

Section 305.9 is hereby added to the Uniform Administrative Code as follows:

Section 305.9 Required Inspections and Tests

1. A pre-construction meeting with the City and the project personnel will be required prior to beginning any new building or when required by the City.

2. For all new construction and when required by the City, a licensed surveyor must certify that the location of the footing forms is per the approved plans before foundations can be poured. The surveyor must provide a plot plan showing precise dimensions to the property lines and the elevation of the forms as compared with the reference elevation shown on the approved plans.

3. For all new construction and when required by the City, a licensed surveyor must certify that the height of the building is in accordance with the approved plans. The surveyor must show the precise height of the building as compared with the reference elevation shown on the approved plans.

4. An approved weatherproofing consultant must certify the installation of weatherproofing on all retaining walls which are adjacent to interior areas of the building. The consultant will not be required if the installer is certified in writing by the manufacturer.

5. For all new construction and when required by the City, an approved weatherproofing consultant must certify that the weatherproofing elements of the building have been installed in accordance with the approved plans, all relevant codes, and per manufacturers specifications. At a minimum, an inspection and report will be required before plastering begins and before final approval is granted.

6. Prior to final approval, a certified air balancer must provide a written report showing the air volumes for all elements of a commercial garage exhaust system or a commercial kitchen hood system.

7. Prior to final approval, the City must witness a test of all fire smoke dampers.

Section 4. Section 311 is hereby added to the Uniform Administrative Code as follows:

Section 311 is hereby added to the Uniform Administrative Code as follows:

Section 311. Toilet facilities required during construction. Before the start of construction of any building or structure, and before any remodel where all toilet facilities are temporarily removed, a temporary water-flushed or approved chemical toilet shall be installed for the use of the workers and shall comply with all of the following requirements:

(1) Such temporary toilet shall be maintained throughout the construction of the building or structure;

(2) If a water-flushed toilet is used, such toilet shall be connected to the sewer, and tile pipe without a vent may be used for the installation;

(3) Such temporary toilet shall be located within twenty-five (25') feet of the rear property line and shall be set back at least twenty (20) feet from any other property line unless the City Building Official approves an alternate location because the requirements of this subsection prevent servicing the toilet or are otherwise infeasible; and

(4) Such temporary toilet shall not be located on public property without the approval of the Director of Public Works.

Section 5. Section 9-1.201 of Article 2 of Chapter 1 of Title 9 of the Beverly Hills Municipal Code is hereby repealed, provided, however, that such repeal shall not affect or excuse any violation of said Section 9-1.201 occurring prior to the effective date of this ordinance. New Section 9-1.201 of Article 2 of Chapter 1 of Title 9 of the Beverly Hills Municipal Code is hereby added as follows:

Section 9-1.201 Adoption of California Building Code. The 2007 edition of the California Building Code, excluding Sections 1505.1.2 and 1505.1.3 and Chapter 32, and the Appendix, excluding Appendix Chapters 1, A, B, C, D, F, and H are hereby adopted by reference, but subject to the amendments set forth in Sections 9-1.202 and 9-1.203.

Section 6. Sections 9-1.202 and 9-1.203 of Article 2 of Chapter 1 of Title 9 of the Beverly Hills Municipal Code are hereby repealed, provided, however, that such repeal shall not affect or excuse any violation of said Sections 9-1.202 and 9-1.203 occurring prior to the effective date of this ordinance. New Sections 9-1.202 and 9-1.203 of Article 2 of Chapter 1 of Title 9 of the Beverly Hills Municipal Code regarding amendments and additions to the California Building Code and its appendix are hereby added as follows:

Section 9-1.202 Amendments to California Building Code.

The California Building Code adopted pursuant to Section 9-1.201 is hereby amended as follows:

Section 101.1 of the California Building Code is hereby amended as follows:

Section 101.1 Title. For the City of Beverly Hills, these regulations shall be known as the Beverly Hills Building Code. The provisions contained in the California Building Code of the (compiled) California Building Standards Code as defined in Section 18910, Health and Safety Code, may be cited as such and are referred to hereafter as "these regulations" or "these building standards" or "this code". These regulations shall also be collectively known as the "California Building Code" as amended by the Beverly Hills Municipal Code.

Section 501.2 of the California Building Code is hereby amended as follows:

Section 501.2 Premises Identification.

Section 501.2.1 Street address numbering system. The following provisions shall be applicable to street numbering:

(1) On the east-west axis, all numbers shall sequence, as much as practicable, with the contiguous east-west streets abutting Los Angeles City and County.

(2) On the north-south axis, streets north of Wilshire Boulevard shall be designated with the prefix "North," and streets south of Wilshire Boulevard shall be designated with the prefix "South."

(3) Numbers on the northerly and westerly sides of all streets shall end in an odd digit, while numbers on the southerly and easterly sides shall end in an even digit.

(4) The City Building Official shall designate street address numbers, and shall maintain on file a map entitled "Official Numbering Map of the City of Beverly Hills" which shall depict the official designation of the numbers assigned to property fronting on the various streets in the City.

Section 501.2.2 Building numbering requirements. The entrances to all buildings from public streets shall have the numbers designated by the City Building Official conspicuously displayed near the entrance of the structure in a manner that they are in plain view from the street. All numbers shall be at least six (6") inches in height in all commercial buildings and three (3") inches in height for all residential structures. Residential structures which have access from a rear alley, in addition to the numbering required by this Section, shall for purposes of emergency response, provide numbering and street identification which is clearly visible from the rear alley access in accordance with the following provisions:

(1) The name of the street and street number as designated by the City Building Official shall be visible from the alley and located adjacent to the alley access to the structure.

(2) The address markings shall be placed five (5') feet above the alley surface, with numbers four (4") inches in height and letters two (2") inches in height, and placed upon the structure, wall, fence, gate, or other appropriate surface so as to be clearly visible.

(3) If any property owner shall fail to provide the address identification required by this subsection on the premises, the City may provide and affix such address identification markings at

no cost to the property owner. Where identification markings are provided by the City, no person shall remove, deface, or modify such markings without the written authorization of the City Building Official.

Section 501.2.3 Diagram required for six or more dwelling units. Where a building or building complex contains six (6) or more separate dwelling units, a description diagram indicating the identification pattern and location of each dwelling unit shall be posted in a conspicuous manner at the primary entrance of such building or buildings. This requirement of this Section shall be included in any building plans submitted for plan check.

Section 501.2.4 Prohibition against placing numbers on streets, sidewalks, or curbs or displaying improper building numbers. No person shall place, maintain, or cause any number, figure, letter, carving, drawing, design, or other marking upon, or paint, any street, sidewalk, or curb in the City, except as authorized by the City. No person shall place, maintain, or display any address identification number other than as designated by the City Building Official.

Section 903.2 of the California Building Code is hereby amended as follows:

Section 903.2 Where required. An automatic fire extinguishing system shall be required for all occupancies except U Occupancies which are sheds that are less than five hundred (500) square feet. For requirements for automatic fire extinguishing system to existing structures refer to the California Fire Code as adopted by the City.

Section 907.2.10.1 of the California Building Code is hereby amended as follows:

Section 907.2.10.1 Where required. Smoke alarms for all new and existing R-occupancies shall be installed in the locations described in Sections 907.2.10.1.1 and 907.2.10.1.3.

Section 907.2.10.2 of the California Building Code is hereby amended as follows:

Section 907.2.10.2 Power Source. In existing construction, new construction, and in newly classified Group R occupancies, required smoke alarms shall receive their primary power from the building wiring where such wiring is served from a commercial source and shall be equipped with a battery backup. Smoke alarms shall emit a signal when the batteries are low. Wiring shall be permanent and without a disconnecting switch other than as required for overcurrent protection.

EXCEPTION: Smoke alarms are not required to be equipped with battery backup in Group R-1 where they are connected to an emergency electrical system.

Section 1020.1.7 of the California Building Code is hereby amended as follows:

Section 1020.1.7 Smokeproof enclosures. In buildings required to comply with sections 403 or 405 of the California Building Code, or in buildings four or more stories, each of the exit enclosures shall be a smokeproof enclosure or pressurized stairway in accordance with Section 909.20. The system shall be certified by a licensed contractor at the expense of the owner and a report shall be submitted to the City Fire Marshal every five years.

Section 1505.1 of the California Building Code is hereby amended as follows:

Section 1505.1 General. Except as otherwise provided in this section, roof coverings or roof assemblies on any structure regulated by this Code shall be a fire-retardant roof covering or roof assembly that is listed as a Class A assembly in accordance with ASTM E 108 or UL 790. In addition, no wood shall be used as a roof covering material. Noncombustible roof coverings may be applied in accordance with the manufacturer's requirements in lieu of a fire-retardant roofing assembly.

EXCEPTION:

(1) Roof repairs of less than 10 percent of the total roof area on existing structures in any one year period may be repaired with a roof covering that meets the same fire retardant standard as the existing roof.

Section 1505.1.1 of the California Building Code is hereby amended as follows:

Section 1505.1.1 Class A roof covering requirement. Notwithstanding any other requirement of the Beverly Hills Municipal Code, no later than July 1, 2013, all roof coverings in the City of Beverly Hills shall be fire retardant Class A.

Section 1505.1.2 and 1505.1.3 of the California Building Code is hereby deleted as follows:

Section 1505.1.2. Deleted

Section 15.5.1.3. Deleted

Section 1509.6 is hereby added to the California Building Code as follows:

Sec 1509.6 Roof top equipment.

Section 1509.6.1 Equipment Enclosures. Operating equipment, including associated ducting, located on the roof of a building shall be enclosed so as to be shielded from view in a horizontal plane or lower and so as to comply with the noise abatement provisions of Chapter 1 of Title 5 of the Beverly Hills Municipal Code. The enclosure finish shall match that of the building exterior walls. Enclosures on buildings with non-residential uses shall be of non-combustible, opaque material.

Section 1613.6.1 of the California Building Code is hereby amended as follows:

Section 1613.6.1 Assumption of flexible diaphragm. Add the following text at the end of Section 12.3.1.1 of ASCE 7: -

Diaphragms constructed of wood structural panels or untopped steel decking shall also be permitted to be idealized as flexible, provided all of the following conditions are met:

1. Toppings of concrete or similar materials are not placed over wood structural panel diaphragms except for nonstructural toppings no greater than 1 ½ inches (38 mm) thick.

2. Each line of vertical elements of the lateral-force-resisting system complies with the allowable story drift of Table 12.12-1.

3. Vertical elements of the lateral-force-resisting system are light-framed walls sheathed with wood structural panels rated for shear resistance or steel sheets.

4. Portions of wood structural panel diaphragms that cantilever beyond the vertical elements of the lateral-force-resisting system are designed in accordance with Section 2305.2.5 of the *California Building Code*.

EXCEPTION: In lieu of Section 2305.2.5, flexible diaphragm assumption is permitted to be used for buildings up to two stories in height provided cantilevered diaphragms supporting lateral-force-resisting elements from above does not exceed 15 percent of the distance between lines of lateral-force-resisting elements from which the diaphragm cantilevers nor one-fourth the diaphragm width perpendicular to the overhang.

Sections 1614, 1614.1, 1614.1 and 1614.1.2 are hereby added to the California Building Code as follows:

SECTION 1614
MODIFICATION TO ASCE 7.

Section 1614.1 General. The text of ASCE 7 shall be modified as indicated in this Section.

Section 1614.1.1 ASCE 7, 12.2.3.1, Exception 3. Modify ASCE 7 Section 12.2.3.1 Exception 3 to read as follows:

3. Detached one and two family dwellings up to two stories in height of light frame construction.

1614.1.2 ASCE 7, 12.3.1.1. Modify ASCE 7 Section 12.3.1.1 to read as follows:

Section 12.3.1.1 Flexible Diaphragm Condition. Diaphragm constructed of untopped steel decking or wood structural panels are permitted to be idealized as flexible in structures in which the vertical elements are steel or composite steel and concrete braced frames, or concrete, masonry, steel, or composite shear walls. Diaphragms of wood structural panels or untopped steel decks in one- and two-family residential buildings of light-frame construction shall also be permitted to be idealized as flexible.

Flexible diaphragm assumption is permitted to be used for buildings up to two stories in height provided cantilevered diaphragms supporting lateral-force-resisting elements from above does not exceed 15 percent of the distance between lines of lateral-force-resisting elements from which the diaphragm cantilevers nor one-fourth the diaphragm width perpendicular to the overhang.

Section 1614.1.3 is hereby added to the California Building Code as follows:

Section 1614.1.3 ASCE 7, Section 12.8.1.1. Modify ASCE 7 Section 12.8.1.1 by amending Equation 12.8-5 as follows:

$C_s = 0.044\ S_{DS}\ I \geq 0.01$ (Eq. 12.8-5)

Section 1614.1.4 is hereby added to the California Building Code as follows:

Section 1614.1.4 ASCE 7, Table 12.8-2. Modify ASCE 7 Table 12.8-2 by adding the following:

Structure Type	C_t	x
Eccentrically braced steel frames *and buckling-restrained braced frames*	0.03 (0.0731)[a]	0.75

Section 1614.1.5 is hereby added to the California Building Code as follows:

Section 1614.1.5 ASCE 7, Section 12.8.7. Modify ASCE 7 Section 12.8.7 by amending Equation 12.8-16 as follows:

$$\theta = \frac{P_x \Delta \underline{I}}{V_x h_{sx} C_d}$$

(12.8-16)

Section 1614.1.6 is hereby added to the California Building Code as follows:

Section 1614.1.6 ASCE 7, 12.11.2.2.3. Modify ASCE 7 Section 12.11.2.2.3 to read as follows:

Section 12.11.2.2.3 Wood Diaphragms. In wood diaphragms, the continuous ties shall be in addition to the diaphragm sheathing. Anchorage shall not be accomplished by use of toe nails or nails subject to withdrawal nor shall wood ledgers or framing be used in cross-grain bending or cross-grain tension. The diaphragm sheathing shall not be considered effective as providing ties or struts required by this section.

For wood diaphragms supporting concrete or masonry walls, wood diaphragms shall comply with the following:

1. The spacing of continuous ties shall not exceed 40 feet. Added chords of diaphragms may be used to form subdiaphragms to transmit the anchorage forces to the main continuous crossties.

2. The maximum diaphragm shear used to determine the depth of the subdiaphragm shall not exceed 75% of the maximum diaphragm shear.

Section 1614.1.7 is hereby added to the California Building Code as follows:

Section 1614.1.7 ASCE 7, Section 12.12.3. Replace ASCE 7 Section 12.12.3 as follows:

Section 12.12.3 Minimum Building Separation. All structures shall be separated from adjoining structures. Separations shall allow for the maximum inelastic response displacement ($\square_M$). $\square_M$ shall be determined at critical locations with consideration for both translational and torsional displacements of the structure as follows:

$$\Delta_M = C_d \delta_{max} \qquad \textit{(Equation 16-45)}$$

where δ_{max} is the calculated maximum displacement at Level x as define in ASCE 7 Section 12.8.4.3.

Adjacent buildings on the same property shall be separated by at least a distance Δ_{MT}, where

$$\Delta_{MT} = \sqrt{(\Delta_{M1})^2 + (\Delta_{M2})^2} \qquad \textit{(Equation 16-46)}$$

and Δ_{M1} and Δ_{M2} are the maximum inelastic response displacements of the adjacent buildings.

Where a structure adjoins a property line not common to a public way, the structure shall also be set back from the property line by at least the displacement, Δ_M, of that structure.

EXCEPTION: Smaller separations or property line setbacks shall be permitted when justified by rational analysis.

Section 1614.1.8 is hereby added to the California Building Code as follows:

Section 1614.1.8 ASCE 7, 12.12.4. Modify ASCE 7 Section 12.12.4 to read as follows:

Section 12.12.4 Deformation Compatibility for Seismic Design Category D through F. For structures assigned to Seismic Design Category D, E, or F, every structural component not included in the seismic force-resisting system in the direction under consideration shall be designed to be adequate for the gravity load effects and the seismic forces resulting from displacement to the design story drift (Δ) as determined in accordance with Section 12.8.6 (see also Section 12.12.1).

EXCEPTION: Reinforced concrete frame members not designed as part of the seismic force-resisting system shall comply with Section 21.9 of ACI 318.

Where determining the moments and shears induced in components that are not included in the seismic force-resisting system in the direction under consideration, the stiffening effects of adjoining

rigid structural and nonstructural elements shall be considered and a rational value of member and restraint stiffness shall be used.

When designing the diaphragm to comply with the requirements stated above, the return walls and fins/canopies at entrances shall be considered. Seismic compatibility with the diaphragm shall be provided by either seismically isolating the element or by attaching the element and integrating its load into the diaphragm.

Section 1704.4 of the California Building Code is hereby amended as follows

Section 1704.4 Concrete Construction. The special inspections and verifications for concrete construction shall be as required by this section and Table 1704.4.

EXCEPTIONS: Special inspection shall not be required for:

1. Isolated spread concrete footings of buildings three stories or less in height that are fully supported on earth or rock, where the structural design of the footing is based on a specified compressive strength, f'c, no greater than 2,500 pounds per square inch (psi) (17.2 Mpa).

2. Continuous concrete footings supporting walls of buildings three stories or less in height that are fully supported on earth or rock where:

2.1. The footings support walls of light-frame construction;

2.2. The footings are designed in accordance with Table 1805.4.2; or

2.3. The structural design of the footing is based on a specified compressive strength, f'c, no greater than 2,500 pounds per square inch (psi) (17.2 Mpa), regardless of the compressive strength specified in the construction documents or used in the footing construction.

3. Nonstructural concrete slabs supported directly on the ground, including prestressed slabs on grade, where the effective prestress in the concrete is less than 150 psi (1.03 Mpa).

4. Not adopted.

5. Concrete patios, driveways and sidewalks, on grade.

Section 1805.1 of the California Building Code is hereby amended as follows

Section 1805.1 General. Footings and foundations shall be designed and constructed in accordance with Sections 1805.1 through 1805.9. Footings and foundations shall be built on undisturbed soil, compacted fill material or controlled low-strength material (CLSM). Compacted fill material shall be placed in accordance with Section 1803.5. CLSM shall be placed in accordance with Section 1803.6.

The top surface of footings shall be level. The bottom surface of footings is permitted to have a slope not exceeding one unit vertical in 10 units horizontal (10-percent slope). Footings shall be stepped where it is necessary to change the elevation of the top surface of the footing or where the surface of the ground slopes more than one unit vertical in 10 units horizontal (10-percent slope). This stepping requirement shall also apply to the top surface of grade beams supporting walls. Footings shall be reinforced with four 1/2-inch diameter (12.7 mm) deformed reinforcing bars. Two bars shall be place at the top and bottom of the footings as shown in Figure 1805.1.

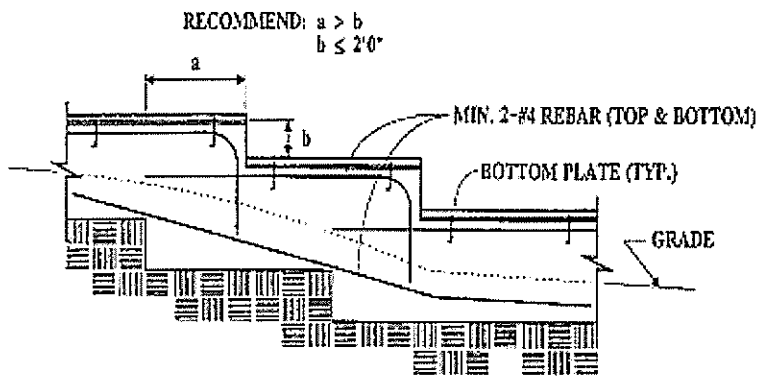

STEPPED FOUNDATIONS

Section 1. Figure 1805.1

Table 1805.4.2 of the California Building Code is hereby amended as follows:

TABLE 1805.4.2
FOOTINGS SUPPORTING WALLS OF LIGHT-FRAMED CONSTRUCTION [a, b, c, d, e]

NUMBER OF FLOORS SUPPORTED BY THE FOOTING[f]	**WIDTH OF FOOTING (inches)**	(b) THICKNESS OF FOOTING **(inches)**
1	12	6
2	15	6
3	18	8[g]

For SI: 1 inch =25.4 mm, 1 foot = 304.8 mm

a. Depth of footings shall be in accordance with Section 91.1805.2
b. The ground under the floor is permitted to be excavated to the elevation of the top of the footing.
c. *Not adopted.*
d. See Section 1908 for additional requirements for footings of structures assigned to Seismic Design Category C, D, E or F.
e. For thickness of foundation walls, see Section 91.1805.5
f. Footings are permitted to support a roof in addition to the stipulated number of floors. Footings supporting roof only shall be as required for supporting one floor.

Section 1805.4.5 of the California Building Code is hereby deleted and replaced with the phrase "Not adopt".

Section 1805.4.6 of the California Building Code is hereby deleted and replaced with the phrase "Not adopt".

Section 1805.5 of the California Building Code is hereby deleted in its entirety.

Section 1805.5 is hereby added to the California Building Code as follows:

Section 1805.5 Foundation walls. Concrete and masonry foundation walls shall be designed in accordance with Chapter 19 or 21.

Section 1908.1 is amended to read as shown below and Section 1908.1.17 is added to the California Building Code as follows:

Section 1908.1 General. The text of ACI 318 shall be modified as indicated in Sections 1908.1.15 through 1908.1.21.

Section 1908.1.15 of the California Building Code is hereby amended as follows:

Section 1908.1.15 ACI 318, Section 22.10. Delete ACI 318, Section 22.10, and replace with the following:

Section 22.10 – Plain concrete in structures assigned to Seismic Design Category C, D, E or F.

Section 22.10.1 – Structures assigned to Seismic Design Category C, D, E or F shall not have elements of structural plain concrete, except as follows:

(a) Concrete used for fill with a minimum cement content of two (2) sacks of Portland cement per cubic yard.

(b) Isolated footings of plain concrete supporting pedestals or columns are permitted, provided the projection of the footing beyond the face of the supported member does not exceed the footing thickness.

(c) Plain concrete footings supporting walls are permitted provided the footings have at least two continuous longitudinal reinforcing bars. Bars shall not be smaller than No. 4 and shall have a total area of not less than 0.002 times the gross cross-sectional area of the footing. A minimum of one bar shall be provided at the top and bottom of the footing. Continuity of reinforcement shall be provided at corners and intersections.

In detached one- and two-family dwellings three stories or less in height and constructed with stud-bearing walls, plain concrete footings with at least two continuous longitudinal reinforcing bars not smaller than No. 4 are permitted to have a total area of less than 0.002 times the gross cross-sectional area of the footing.

Section 1908.1.17 ACI 318, Section 14.8. Modify ACI 318 Section 14.8.3 and 14.8.4 replacing equation (14-7), (14-8) and (14-9).

1. Modify equation (14-7) of ACI 318 Section 14.8.3 as follows:

   I_{cr} shall be calculated by Equation (14-7), and M_a shall be obtained by iteration of deflections.

$$I_{cr} = \frac{E_s}{E_c}\left(A_s + \frac{P_u}{f_y}\frac{h}{2d}\right)(d-c)^2 + \frac{l_w c^3}{3} \qquad (14\text{-}7)$$

   and the value E_s/E_c shall not be taken less than 6.

2. Modify ACI 318 Sec, 14.8.4 as follows:

   Section 14.8.4 – Maximum out-of-plane deflection, □$_s$, due to service loads, including P□ effects, shall not exceed $l_c/150$.

   If M_a, maximum moment at mid-height of wall due to service lateral and eccentric loads, including P□ effects, exceed ($^2/_3$) M_{cr}, □$_s$ shall be calculated by Equation (14-8):

$$\Delta_s = \frac{2}{3}\Delta_{cr} + \frac{M_a - \frac{2}{3}M_{cr}}{M_n - \frac{2}{3}M_{cr}}\left(\Delta_n - \frac{2}{3}\Delta_{cr}\right) \qquad (14\text{-}8)$$

   If M_a does not exceed ($^2/_3$) M_{cr}, □$_s$ shall be calculated by Equation (14-9):

$$\Delta_s = \left(\frac{M_a}{M_{cr}}\right)\Delta_{cr} \qquad (14\text{-}9)$$

   where:

$$\Delta_{cr} = \frac{5 M_{cr} l_c^2}{48 E_c I_g}$$

$$\Delta_n = \frac{5 M_n l_c^2}{48 E_c I_{cr}}$$

Section 1908.1 is amended to read as shown below and Section 1908.1.18 thru 1908.1.21 is added to the California Building Code as follows:

Section1908.1 General. The text of ACI 318 shall be modified as indicated in Sections 1908.1.1 through 1908.1.21.

Section 1908.1.18 ACI 318, Section 21.4.4.1. Modify ACI 318 Section 21.4.4.1 as follows:

Where the calculated point of contraflexure is not within the middle half of the member clear height, provide transverse reinforcement as specified in ACI 318 Sections 21.4.4.1, Items (a) through (c), over the full height of the member.

Section 1908.1.19 ACI 318, Section 21.4.4. Modify ACI 318 by adding Section 21.4.4.7 as follows:

Section 21.4.4.7 – At any section where the design strength, φP_n, of the column is less than the sum of the shears V_e computed in accordance with ACI 318 Sections 21.3.4.1 and 21.4.5.1 for all the beams framing into the column above the level under consideration, transverse reinforcement as specified in ACI 318 Sections 21.4.4.1 through 21.4.4.3 shall be provided. For beams framing into opposite sides of the column, the moment components may be assumed to be of opposite sign. For the determination of the design strength, φP_n, of the column, these moments may be assumed to result from the deformation of the frame in any one principal axis.

Section 1908.1.20 ACI 318, Section 21.7.4. Modify ACI 318 by adding Section 21.7.4.6 as follows:

Section 21.7.4.6 – Walls and portions of walls with $P_u > 0.35P_o$ shall not be considered to contribute to the calculated strength of the structure for resisting earthquake-induced forces. Such walls shall conform to the requirements of Section 1631.2, Item 4 ACI 318 Section 21.11.

Section 1908.1.21 ACI 318, Section 21.9.4. Modify ACI 318 Section 21.9.4 by adding the following:

Collector and boundary elements in topping slabs placed over precast floor and roof elements shall not be less than 3 inches (76 mm) or 6 d_b thick, where d_b is the diameter of the largest reinforcement in the topping slab.

Section 2205.4 is hereby added to the California Building Code as follows:

Section 2205.4 Modifications to AISC 341.

Section 2205.4.1 Part I, Structural Steel Building Provisions Modifications.

Section 2205.4.1.1 Part I, Section 13, Special Concentrically Braced Frames (SCBF) Modifications.

Section 2205.4.1.1.1 AISC 341, Part I, 13, Members. Add a new section as follows:

AISC 341, 13.2f – Member Types

The use of rectangular HSS are not permitted for bracing members, unless filled solid with cement grout having a minimum compressive strength of 3000 psi (20.7 MPa) at 28 days. The effects of composite action in the filled composite brace shall be considered in the sectional properties of the system where it results in the more severe loading condition or detailing.

Section 2305.2.5 of the California Building Code is hereby amended as follows:

Section 2305.2.5 Rigid Diaphragms. Design of structures with rigid diaphragms shall conform to the structure configuration requirements of Section 12.3.2 of ASCE 7 and the horizontal shear distribution requirements of Section 12.8.4 of ASCE 7.

Wood structural panel diaphragms shall not be considered as transmitting lateral forces by rotation.

Rigid wood diaphragms are permitted to cantilever past the outermost supporting shear wall (or other vertical resisting element) a length, *l*, of not more than 25 feet (7620 mm) or two-thirds of the diaphragm width, w, whichever is smaller. Figure 2305.2.5(2) illustrates the dimensions of *l* and w for a cantilevered diaphragm.

Section 2305.3.7.1 is hereby added to the California Building Code as follows:

Section 2305.3.7.1 Hold-down connectors. Hold-down connectors shall be designed to resist shear wall overturning moments using approved cyclic load values or 75 percent of the allowable earthquake load values that do not consider cyclic loading of the product. Connector bolts into wood framing require steel plate washers on the post on the opposite side of the anchorage device. Plate size shall be a minimum of 0.229 inch by 3 inches by 3 inches (5.82 mm by 76 mm by 76 mm) in size. Hold-downs shall be re-tightened just prior to covering the wall framing.

Section 2305.3.12 is hereby added to the California Building Code as follows:

Section 2305.3.12 Quality of Nails. Mechanically driven nails used in wood structural panel shear walls shall meet the same dimensions as that required for hand-driven nails, including diameter, minimum length and minimum head diameter. No clipped head or box nails permitted in new construction. The allowable design value for clipped head nails in existing construction may be taken at no more than the nail-head-area ratio of that of the same size hand-driven nails.

Sections 2306.3.1 and 2306.4.1 of the California Building Code are hereby amended as follows:

Section 2306.3.1 Wood structural panel diaphragms. Wood structural panel diaphragms are permitted to resist horizontal forces using the allowable shear capacities set forth in Table 2306.3.1 or 2306.3.2.

Section 2306.4.1. Wood structural panel shear walls. The allowable shear capacities for wood structural panel shear walls shall be in accordance with Table 2306.4.1. These capacities are permitted to be increased 40 percent for wind design. Wood shear walls shall be constructed of wood structural panels and not less than 4 feet by 8 feet (1219 mm by 2438 mm), except at boundaries and at changes in framing. Wood structural panel thickness for shear walls shall not be less than 3/8 inch thick and studs shall not be spaced at more than 16 inches on center.

The maximum allowable shear value for three-ply plywood resisting seismic forces is 200 pounds per foot (2.92 kn/m). Nails shall be placed not less than 1/2 inch (12.7 mm) in from the panel edges and not less than 3/8 inch (9.5mm) from the edge of the connecting members for shear greater than 350 pounds per foot (5.11kN/m). Nails shall be placed not less than 3/8 inch (9.5 mm) from panel edges and not less than 1/4 inch (6.4 mm) from the edge of the connecting members for shears of 350 pounds per foot (5.11kN/m) or less.

Any wood structural panel sheathing used for diaphragms and shear walls that are part of the seismic-force-resisting system shall be applied directly to framing members.

EXCEPTION: Wood structural panel sheathing in a horizontal diaphragm is permitted to be fastened over solid lumber planking or laminated decking, provided the panel joints and lumber planking or laminated decking joints do not coincide.

Table 2306.4.1 of the California Building Code is hereby deleted in its entirety.

Table 2306.4.1 is hereby added to the California Building Code as follows:

TABLE 2306.4.1
ALLOWABLE SHEAR (POUNDS PER FOOT) FOR WOOD STRUCTURAL PANEL SHEAR WALLS WITH FRAMING OF DOUGLAS FIR-LARCH OR SOUTHERN PINE[a] FOR WIND OR SEISMIC LOADING[b, h, i, j, l, m, n]

PANEL GRADE	MINIMUM NOMINAL PANEL THICKNESS (inch)	MINIMUM FASTENER PENETRATION IN FRAMING (inches)	ALLOWABLE SHEAR VALUE FOR SEISMIC FORCES PANELS APPLIED DIRECTLY TO FRAMING					ALLOWABLE SHEAR VALUE FOR WIND FORCES PANELS APPLIED DIRECTLY TO FRAMING				
			NAIL (common) or staple size[k]	Fastener spacing at panel edges (inches)				NAIL (common) or staple size[k]	Fastener spacing at panel edges (inches)			
				6	4	3	2[e]		6	4	3	2[e]
Structural I Sheathing	3/8	1-3/8	8d (2½"x0.131" common)	200	200	200	200	8d (2½"x0.131" common)	230[d]	360[d]	460[d]	610[d]
		1	1-1/2 16 Gage	116	176	200	200	1-1/2 16 Gage	155	235	310	400
	7/16	1-3/8	8d (2½"x0.131" common)	255	395	505	670	8d (2½"x0.131" common)	255[d]	395[d]	505[d]	670[d]
		1	1-1/2 16 Gage	128	195	259	330	1-1/2 16 Gage	170	260	345	440
	15/32	1-3/8	8d (2½"x0.131" common)	280	430	550	730	8d (2½"x0.131" common)	280	430	550	730
		1	1-1/2 16 Gage	139	210	281	356	1-1/2 16 Gage	185	280	375	475
		1-1/2	10d (3"x0.148" common)	340	510	665[f]	870	10d (3"x0.148" common)	340	510	665[f]	870
Sheathing, plywood siding[g] except Group 5 Species	3/8	1-1/4	6d (2"x0.113" common)	200	200	200	200	6d (2"x0.113" common)	200	300	390	510
		1-3/8	8d (2½"x0.131" common)	200	200	200	200	8d (2½"x0.131" common)	220[d]	320[d]	410[d]	530[d]
		1	1-1/2 16 Gage	105	158	200	200	1-1/2 16 Gage	140	210	280	360
	7/16	1-3/8	8d (2½"x0.131" common)	240	350	450	585	8d (2½"x0.131" common)	240[d]	350[d]	450[d]	585[d]
		1	1-1/2 16 Gage	116	173	233	296	1-1/2 16 Gage	155	230	310	395
	15/32	1-3/8	8d (2½"x0.131" common)	260	380	490	640	8d (2½"x0.131" common)	260	380	490	640
		1-1/2	10d (3"x0.148" common)	310	460	600[f]	770	10d (3"x0.148" common)	310	460	600[f]	770
		1	1-1/2 16 Gage	128	191	251	323	1-1/2 16 Gage	170	255	335	430
	19/32	1-1/2	10d (3"x0.148" common)	340	510	665[f]	870	10d (3"x0.148" common)	340	510	665[f]	870
		1	1-3/4 16 Gage	139	210	281	356	1-3/4 16 Gage	185	280	375	475
			Nail Size (galvanized casing)					Nail Size (galvanized casing)				
	3/8	1-3/8	8d (2½"x0.113")	160	200	200	200	8d (2½"x0.113")	160	240	310	410

Notes to Table 2306.4.1

For SI: 1 inch = 25.4 mm, 1 foot = 25.4 mm, 1 pound per foot = 14.5939 N/m.

a. For framing of other species: (1) Find specific gravity for species of lumber in AF&PA NDS. (2) For staples find shear value from table above for Structural I panels (regardless of actual grade) and multiply value by 0.82 for species with specific gravity of 0.42 or greater, or 0.65 for all other species. (3) For nails find shear value from table above for nail size for actual grade and multiply value by the following adjustment factor: Specific Gravity Adjustment Factor = [1-(0.5-SG)], where SG = Specific Gravity of the framing lumber. This adjustment factor shall not be greater than 1.

b. Panel edges backed with 2-inch nominal or thicker framing. Install panels either horizontally or vertically. Space fasteners maximum 6 inches on center along intermediate framing members for 3/8-inch and 7/16-inch panels installed on studs spaced 24 inches on center. For other conditions and panel thickness, space fasteners maximum 12 inches on center on intermediate supports.

c. 3/8-inch panel thickness or siding with a span rating of 16 inches on center is the minimum recommended where applied direct to framing as exterior siding.

d. Allowable shear values are permitted to be increased to values shown for 15/32-inch sheathing with same nailing provided (a) studs are spaced a maximum of 16 inches on center, or (b) panels are applied with long dimension across studs.

e. Framing at adjoining panel edges shall be 3 inches nominal or thicker, and nails shall be staggered where nails are spaced 2 inches on center.

f. Framing at adjoining panel edges shall be 3 inches nominal or thicker, and nails shall be staggered where both of the following conditions are met: (1) 10d (3"x0.148") nails having penetration into framing of more than 1-1/2 inches and (2) nails are spaced 3 inches on center.

g. Values apply to all-veneer plywood. Thickness at point of fastening on panel edges governs shear values.

h. Where panels applied on both faces of a wall and nail spacing is less than 6 inches o.c. on either side, panel joints shall be offset to fall on different framing members, or framing shall be 3-inch nominal or thicker at adjoining panel edges and nails on each side shall be staggered.

i. In Seismic Design Category D, E or F, where shear design values exceed 350 pounds per linear foot, all framing members receiving edge nailing from abutting panels shall not be less than a single 3-inch nominal member, or two 2-inch nominal members fastened together in accordance with Section 2306.1 to transfer the design shear value between framing members. Wood structural panel joint and sill plate nailing shall be staggered in all cases. See Section 2305.3.11 for sill plate size and anchorage requirements.

j. Galvanized nails shall be hot dipped or tumbled.

k. Staples shall have a minimum crown width of 7/16 inch and shall be installed with their crowns parallel to the long dimension of the framing members.

l. For shear loads of normal or permanent load duration as defined by the AF&PA NDS, the values in the table above shall be multiplied by 0.63 or 0.56, respectively.

m. [DSA-SS & OSHPD 1, 2 and 4] Refer to Section 2305.2.4.2, which requires any wood structural panel sheathing used for diaphragms and shear walls that are part of the seismic-force-resisting system to be applied directly to framing members.

n. The maximum allowable shear value for three-ply plywood resisting seismic forces is 200 pounds per foot (2.92 kn/m).

Section 2306.4.5 of the California Building Code is hereby amended as follows:

Section 2306.4.5 Shear walls sheathed with other materials. Shear wall capacities for walls sheathed with lath, plaster or gypsum board shall be in accordance with Table 2306.4.5. Shear walls sheathed with lath, plaster or gypsum board shall be constructed in accordance with Chapter 25 and Section 2306.4.5.1. Walls resisting seismic loads shall be subject to the limitations in Section 12.2.1 of ASCE 7. The allowable shear values shown in Table 2306.4.5 for material in Category 1 is limited to 90 pound per foot (1.31 kN/m); materials in Category 2 thru 4 are limited to 30 pound per foot (438 N/m). Shear walls sheathed with lath, plaster or gypsum board shall not be used below the top level in a multi-level building.

Table 2306.4.5 of the 2007 California Building Code is hereby deleted in its entirety.

Table 2306.4.5 is hereby added to the California Building Code as follows:

TABLE 2306.4.5
ALLOWABLE SHEAR FOR WIND OR SEISMIC FORCES FOR SHEAR WALLS OF LATH AND PLASTER OR GYPSUM BOARD WOOD FRAMED WALL ASSEMBLIES

(1) YPE OF MATERIAL	THICKNESS OF MATERIAL	WALL Section ONSTRUCTION	FASTENER SPACING[b] MAXIMUM (inches)	Section HEAR VALUE[a,c] (plf)		MINIMUM FASTENER SIZE[e,d,j,k,l]
				Seismic[l]	Wind	
1. Expanded metal, or woven wire lath and portland cement plaster	7/8"	Unblocked	6	90	180	No. 11 gage, 1-1/2" long, 7/16" head 16 Ga. Galv. Staple, 7/8" legs
2. Gypsum lath, plain or perforated	3/8" lath and 1/2" plaster	Unblocked	5	30	100	No. 13 gage, 1-1/8" long, 19/64" head, plasterboard nail 16 Ga. Galv. Staple, 1-1/8" long 0.120" Nail, min. 3/8" head, 1-1/4" long
3. Gypsum sheathing	1/2" x 2' x 8'	Unblocked	4	30	75	No. 11 gage, 1-3/4" long, 7/16" head, diamond-point, galvanized
	1/2" x 4'	Blocked[f]	4	30	175	
		Unblocked	7	30	100	16 Ga. Galv. Staple, 1-3/4" long
	5/8" x 4'	Blocked	4" edge/ 7" field	30	200	6d galvanized 0.120" Nail, min. 3/8" head, 1-3/4" long
4. Gypsum board, gypsum veneer base or water-resistant gypsum backing board	1/2"	Unblocked[f]	7	30	75	5d cooler (1-5/8" lx 0.086") or wallboard 0.120" Nail, min. 3/8" head, 1-1/2" long 16 Gage Staple, 1-1/2" long
		Unblocked[f]	4	30	110	
		Unblocked	7	30	100	
		Unblocked	4	30	125	
		Blocked[g]	7	30	125	
		Blocked[g]	4	30	150	
		Unblocked	8/12[h]	30	60	No. 6- 1-1/4" screws[i]
		Blocked[g]	4/16[h]	30	160	
		Blocked[g]	4/12[h]	30	155	
		Blocked[f, g]	8/12[h]	30	70	
		Blocked[g]	6/12[h]	30	90	
	5/8"	Unblocked[f]	7	30	115	6d cooler (1-7/8" x 0.092") or wallboard 0.120" Nail, min. 3/8" head, 1-3/4" long 16 Gage Staple, 1-1/2" legs, 1-5/8" long
			4	30	145	
		Blocked[g]	7	30	145	
			4	30	175	
		Blocked[g] Two ply	Base ply: 9 Face ply: 7	30	250	Base ply-6d cooler (1-7/8" x 0.092") or wallboard 1-3/4" x 0.120" Nail, min. 3/8" head 1-5/8" 16 Ga. Galv. Staple Face ply-8d cooler (2-3/8" x 0.113") or wallboard 0.120" Nail, min. 3/8" head, 2-3/8" long 15 Ga. Galv. Staple, 2-1/4" long
		Unblocked	8/12[h]	30	70	No. 6- 1-1/4" screws[i]
		Blocked[g]	8/12[h]	30	90	

Notes to Table 2306.4.5

For SI: 1 inch = 25.4 mm, 1 foot = 25.4 mm, 1 pound per foot = 14.5939 N/m.

a. These shear walls shall not be used to resist loads imposed by masonry or concrete construction (see Section 2305.1.5). Values shown are for short-term loading due to wind or seismic loading. Walls resisting seismic loads shall be subject to the limitations in Section 12.2.1 of ASCE 7. Values shown shall be reduced 25 percent for normal loading.

b. Applies to fastening at studs, top and bottom plates and blocking.

c. Alternate fasteners are permitted to be used if their dimensions are not less than the specified dimensions. Drywall screws are permitted to substitute for the 5d (1-5/8" x 0.086"), and 6d (1-7/8" x 0.092")(cooler) nails listed above, and No. 6 1-1/4 inch Type S or W screws for 6d (1-7/8" x 0.092")(cooler) nails.

d. For properties of cooler nails, see ASTM C 514.

e. Except as noted, shear values are based on maximum framing spacing of 16 inches on center.

f. Maximum framing spacing of 24 inches on center.

g. All edges are blocked, and edge fastening is provided at all supports and all panel edges.

h. First number denotes fastener spacing at the edges; second number denotes fastener spacing at intermediate framing members.

i. Screws are Type W or S.

j. Staples shall have a minimum crown width of 7/16 inch, measure outside the legs, and shall be installed with their crowns parallel to the long dimension of the framing members.

k. Staples for the attachment of gypsum loath and woven-wire lath shall have a minimum crown width of ¾ inch, measured outside the legs.

l. This construction shall not be used below the top level of wood construction in a multi-level building.

Section 2308 is hereby added to the California Building Code as follows:

Section 2308.3.4 Braced wall line support. Braced wall lines shall be supported by continuous foundations.

Section 2308.12.1 Number of stories. Structures of conventional light-frame construction shall not exceed one story in height in Seismic Design Category D or E.

Section 2308.12.2 Concrete or masonry. Concrete or masonry walls or masonry veneer shall not extend above the basement.

EXCEPTION: Masonry veneer is permitted to be used in the first story above grade plane in Seismic Design Category D, provided the following criteria are met:

1. Type of brace in accordance with Section 2308.9.3 shall be Method 3 and the allowable shear capacity in accordance with Table 2306.4.1 shall be a minimum of 350 plf (5108 N/m).

2. The bracing of the first story shall be located at each end and at least every 25 feet (7620 mm) o.c. but not less than 45 percent of the braced wall line.

3. Hold-down connectors shall be provided at the ends of braced walls for the first floor to foundation with an allowable design of 2,100 pounds (9341 N).

4. Cripple walls shall not be permitted.

5. Anchored masonry and stone wall veneer shall not exceed 5 inches (127 mm) in thickness, shall conform to the requirements of Division 14 and shall not extend more than 5 feet (1524 mm) above the first story finished floor.

Section 2308.12.4 Braced wall line sheathing. Braced wall lines shall be braced by one of the types of sheathing prescribed by Table 2308.12.4 as shown in Figure 2308.9.3. The sum of lengths of braced wall panels at each braced wall line shall conform to Table 2308.12.4. Braced wall panels shall be distributed along the length of the braced wall line and start at not more than 8 feet (2438 mm) from each end of the braced wall line. Panel sheathing joints shall occur over studs or blocking. Sheathing shall be fastened to studs, top and bottom plates and at panel edges occurring over blocking. Wall framing to which sheathing used for bracing is applied shall be nominal 2 inch wide [actual $1^1/_2$ inch (38 mm)] or larger members, spaced a maximum of 16 inches on center. Nailing shall be minimum 8d common placed 3/8 inches from panel edges and spaced not more than 6 inches on center, and 12 inches on center along intermediate framing members.

Braced wall panel construction types shall not be mixed within a braced wall line.

Braced wall panels required by Section 2308.12.4 may be eliminated when all of the following requirements are met:

1. One story detached Group U occupancies not more than 25 feet in depth or length.

2. The roof and three enclosing walls are solid sheathed with ½-inch nominal thickness wood structural panels with 8d common nails placed 3/8 inches from panel edges and spaced not more than 6 inches on center along all panel edges and 12 inches on center along intermediate framing members. Wall openings for doors or windows are permitted provided a minimum 4 foot wide wood structural braced panel with minimum height to length ratio of 2 to 1 is provided at each end of the wall line and that the wall line be sheathed for 50% of its length.

Section 2308.12.5 Attachment of sheathing. Fastening of braced wall panel sheathing shall not be less than that prescribed in Table 2308.12.4 or Table 2304.9.1. Wall sheathing shall not be attached to framing members by adhesives.

All braced wall panels shall extend to the roof sheathing and shall be attached to parallel roof rafters or blocking above with framing clips (18 gauge minimum) spaced at maximum 24 inches (6096 mm) on center with four 8d nails per leg (total eight 8d nails per clip). Braced wall panels shall be laterally braced at each top corner and at maximum 24 inch (6096 mm) intervals along the top plate of discontinuous vertical framing.

TABLE 2308.12.4
WALL BRACING IN SEISMIC DESIGN CATEGORIES D AND E
(Minimum Length of Wall Bracing per each 25 Linear Feet of Braced Wall Line [a])

CONDITION	SHEATHING TYPE[b]	$S_{DS} < 0.50$	$0.50 \leq S_{DS} < 0.75$	$0.75 \leq S_{DS} \leq 1.00$	$S_{DS} > 1.00$
One Story	G-P[c]	10 feet 8 inches	14 feet 8 inches	18 feet 8 inches	25 feet 0 inches
	S-W	5 feet 4 inches	8 feet 0 inches	9 feet 4 inches	12 feet 0 inches

For SI: 1 inch = 25.4 mm, 1 foot = 304.8 mm.

a. Minimum length of panel bracing of one face of the wall for S-W sheathing *shall be at least 4'-0" long* or both faces of the wall for G-P sheathing *shall be at least 8'-0" long;* h/w ratio shall not exceed 2:1. For S-W panel bracing of the same material on two faces of the wall, the minimum length is permitted to be one-half the tabulated value but the h/w ratio shall not exceed 2:1 and design for uplift is required.

b. G-P = gypsum board, *portland cement* plaster or gypsum sheathing boards; S-W = wood structural panels.

c. Nailing as specified below shall occur at all panel edges at studs, at top and bottom plates and, where occurring, at blocking:
For 1/2-inch gypsum board, 5d (0.113 inch diameter) cooler nails at 7 inches on center;
For 5/8-inch gypsum board, No 11 gage (0.120 inch diameter) cooler nails at 7 inches on center;
For gypsum sheathing board, 1-3/4 inches long by 7/16-inch head, diamond point galvanized nails at 4 inches on center;
For gypsum lath, No. 13 gage (0.092 inch) by 1-1/8 inches long, 19/64-inch head, plasterboard at 5 inches on center;
For Portland cement plaster, No. 11 gage (0.120 inch) by $1^1/_2$ inches long, $^7/_{16}$- inch head at 6 inches on center.

d. S-W sheathing shall be 15/32" thick nailed with 8d nails, at 6:6:12.

Section 3110E is hereby added to the California Building Code as follows:
Section 3110E Tents, Awnings, Canopies, and Umbrellas.

Section 3110E.1 Permits required. No tent, awning, or canopy in excess of forty (40) square feet shall be erected or maintained on private property within the City without first obtaining a permit from the City Building Official. The permit fee shall be as established by resolution of the City Council. Unless otherwise authorized by the City Building Official, no tent, awning, or canopy in excess of forty (40) square feet shall be erected or maintained on private property within the City in excess of ten (10) days.

Section 3110E.2 Temporary use. Tents, awnings, or canopies of cloth or pliable material shall be erected only as temporary shelters from the rain or sun and shall not be used as permanent structures or additions to the main building. Except as authorized by the City Council or as otherwise specified in the Municipal Code, such structures shall not be used for the purpose of sheltering goods, wares, or merchandise or for the purpose of engaging in business in any manner thereunder. Such structures shall be permitted only if so constructed and situated, so that in the opinion of the City Building Official, the structure will not cause a fire hazard or in any other way be dangerous to life, limb, or property.

EXCEPTION: The provisions of this Section shall not prohibit the covering of materials stored in a yard with fire-retardant tarpaulins.

Section 3110E.3 Restrictions and requirements. Any tent, awning, or other pliable material for which a permit is required under this Section shall comply with the following:

(1) All City Code provisions and regulations shall be complied with;

(2) An electrical permit shall be obtained by a duly licensed electrical contractor for any wiring or lighting to be installed;

(3) All plastics used shall display approval by the office of the Fire Marshal of the State;

(4) All cloth used shall be incombustible or flame-retardant. Flame-retardant materials shall display the name of the treating agency, the date of the flame-retardant application, the type of flame-retardant used, and the flame-retardant certificate;

(5) A testing flap shall be provided for the use of the Fire Department inspector;

(6) Two (2) means of egress shall be provided for tents or canopies having an area of 1,000 square feet or more. Such means of egress shall be not less than five (5') feet in width and located not less than one-fifth (1/5) of the perimeter of the structure apart. Each means of egress shall be provided with exit signs as required by this Code.

Section 3110E.4 Umbrellas. No open umbrella in excess of seven (7') feet in diameter shall be permitted in the commercial and industrial zones. Any umbrella having a diameter of seven (7') feet or less shall be securely fastened to a movable base approved by the City Building Official. Such umbrella shall at all times be maintained in a position and in such a manner as shall not constitute a fire hazard to persons or property, either from fire or wind.

Chapter 32 of the California Building Code is hereby deleted in its entirety.

A new Chapter 32 is hereby added to the California Building Code as follows:

CHAPTER 32. PERMANENT OCCUPANCY OF PUBLIC PROPERTY

Section 3201 -- General.

Section 3201.1 No part of any structure, or any appendage thereto, shall project beyond the property line of the building site, except as specified in this Chapter and elsewhere in the Beverly Hills Municipal Code.

Section 3201.2 Structures or appendages regulated by this Code shall be constructed of materials as permitted by this code.

Section 3201.3 The projection of any structure or appendage shall be the distance measured horizontally from the property line to the outermost point of the projection.

Section 3201.4. No provision of this Chapter shall be construed to permit the violation of other laws and ordinances regulating the use and occupancy of public property.

Section 3202 Below grade. Portions of buildings or structures below grade shall not project beyond the property line of the building site except as otherwise provided in the Beverly Hills Municipal Code.

Section 3203 Above grade.

Section 3203.1 Streets. In a commercial or industrial zone those portions of buildings, structures, or appendages thereto that may project beyond property lines adjacent to a street are as follows:

(1) Marquees;

(2) Canopies;

(3) Cornices;

(4) Awnings;

(5) Signs;

(6) Doors; and

(7) When approved by the Architectural Commission, flagpoles, lights, and other ornamental projections.

Section 3203.2 Alleys in a commercial or industrial zone. Projections beyond property lines adjacent to an alley in a commercial or industrial zone shall not be permitted.

Section 3203.3 Streets and alleys in residential zones. Projections beyond property lines adjacent to streets and alleys in residential zones shall not be permitted.

Section 3204 - Marquees and Canopies.

Section 3204.1 General. For the purposes of this Section, a marquee or canopy shall include any object or decoration attached to or a part of such marquee or canopy.

Section 3204.2 Projection and clearance. A marquee or canopy shall project not more than two-thirds (2/3) of the distance from the property line to the curb line and shall be no less than eight (8') feet above the ground or pavement below.

Section 3204.3 Thickness. The maximum height or thickness of a marquee or canopy measured vertically from its lowest to its highest point shall not exceed nine (9') feet.

Section 3204.4 Construction. A marquee or canopy shall be supported entirely by the building.

Section 3204.5 Roof construction. The roof or any part thereof may be a skylight provided wire glass or laminated glass. Every roof and skylight of a marquee or canopy shall be sloped to downspouts which shall conduct any drainage from the marquee under the sidewalk to the curb.

Section 3204.6 Location prohibited. Every marquee or canopy shall be so located as not to interfere with the operation of any exterior standpipe or to obstruct the clear passage of stairways or exits from the building or the installation or maintenance of electroliers.

Section 3205 - Awnings.

Section 3205.1 Definition. For the purposes of this Section, the term "Awning" is defined as follows:

AWNING is a temporary shelter supported entirely from the exterior wall of a building.

Section 3205.2 Construction. Awnings shall have noncombustible frames but may have combustible coverings.

Section 3205.3 Projection. Awnings may extend over public property not more than seven (7') feet from the face of a supporting building, but no portion shall extend nearer than two (2') feet to the face of the nearest curb line measured horizontally. In no case shall the awning extend over public property greater than two-thirds (2/3) of the distance from the property line to the nearest curb in front of the building site.

Section 3205.4 Height. Awnings shall not exceed nine (9') feet in height above the lowest extremity of the awning.

Section 3205.5 Clearances. All portions of any awning shall be at least eight (8') feet above any public walkway.

EXCEPTION: Any valance attached to an awning shall not project above the roof of the awning at the point of attachment and shall not extend more than twelve (12") inches below the roof of the awning at the point of attachment, but in no case shall any portion of a valance be less than seven (7') feet in height above a public way.

Section 3206 - Doors. Doors, either fully opened or when opening, shall not project more than one foot beyond the property line, except that in alleys no projection beyond the property line is permitted. Power-operated doors and their guide rails shall not project over public property.

Section 3207 Signs. Signs may project beyond the property line as provided in Chapter 4 of Title 10 of the Beverly Hills Municipal Code.

Section 3208 Flagpoles. Flagpoles, when permitted, shall project no more than two-thirds (2/3) of the distance from the property line to the curb line and shall not be less than twelve (12') feet above the ground or pavement below, including the flag.

Section 3209 Cornices, lights, and other ornamental projections. Cornices, lights, and other ornamental projections, when permitted, shall project not more than two (2') feet beyond the property line and shall not be less than eight (8') feet above the ground or pavement below.

Section 3306 of the California Building Code is hereby amended by adding a sentence at the end of section 3306.4; by adding a sentence at the end of section 3306.5; and by adding a sentence at the end of the first paragraph of section 3306.7 as follows:

Section 3306 Protection of Pedestrians

Section 3306.4 *** Railings shall be painted, and maintained painted, in a neutral color.

Section 3306.5 *** Barriers and Fences shall be painted, and maintained painted in a neutral color.

Section 3306.7 *** The space under the canopy over the walkway and the approaches thereto shall be kept well lighted with artificial lighting continuously between sunset and sunrise. An automatic lighting system shall be used.

Chapter 36 is hereby added to the California Building Code as follows:

CHAPTER 36. HILLSIDE BUILDING DISTRICT

Section 3601 Hillside Building District established.

There is hereby established a Hillside Building District in the area designated in the "Hillside Building District Map" as set forth in this Code. The specific regulations in this Chapter shall apply to the Hillside Building District.

Section 3602 Geological and foundation investigations required.

Section 3602.1 Investigations required. Prior to issuing a building permit for any new building, structure, or addition to an existing building or structure on a site in the Hillside Building District where slopes exceed three (3) horizontal to one vertical or where unstable geological or soil conditions are known or suspected to exist, a geological and foundation investigation shall be conducted, and a report shall be submitted to the City Building Official by a geologist and a civil engineer registered in the State; provided, however, the City Building

Official may issue a building permit for an addition to an existing building or structure without a geological and foundation inspection if such addition is located so as not to be affected by slopes exceeding three (3) horizontal to one vertical.

Section 3602.2 Prerequisites to permit issuance. Where a geological and foundation investigation required by this Section indicates the presence of a geological hazard, and evidence indicates mitigating measures can offset or eliminate the hazard, the City Building Official shall issue a building permit provided all recommended mitigating measures are designed and incorporated into the proposed project and all other requirements of this Code and the Municipal Code are met.

Section 3602.3 Denial of permits. Where a geological and foundation investigation indicates the presence of a geological hazard, and evidence indicates no mitigating measures can offset or eliminate the hazard, the City Building Official shall deny the issuance of a building permit for the proposed project.

Section 3603 Foundation embedment. Where foundations are placed on natural slopes or uncompacted fill, the foundation shall extend through the natural overburdened or uncompacted fill and rest in undisturbed, unweathered, firm natural base materials. Foundations shall be designed to resist any vertical or lateral movement or overburden or fill.

Section 3604 Yard Drainage. Surface runoff flowing or collecting on building pads and yards shall be directed to catch basins and non-erosive devices to reduce the hazard of erosion, subsidence, or slippage of the surrounding property. Such devices shall conduct any surface runoff to a street or alley and shall be designed to accommodate a three (3") inch per hour rainfall.

Section 3605 Gutters. Eave gutters and downspouts on structures located in the Hillside Building District shall be provided to collect all roof water and deposit it in non-erosive devices to a street or alley. Gutters, downspouts, and non-erosive devices shall be sized to accommodate a three (3") inch per hour rainfall.

Chapter 37 is hereby added to the California Building Code as follows:

CHAPTER 37. ADDITIONAL REQUIREMENTS IN CERTAIN AREAS

Section 3701 Construction requirements in commercial and industrial zones.

Section 3701.1 Except as provided in Section 3702.2, all buildings and structures hereafter erected, constructed, or moved within any commercial or industrial zone shall be of Type I, II-A, or III A, and shall comply with other provisions of this Code.

Section 3701.2 Occupancies with a floor area of fifteen hundred (1500) square feet or less, and open parking garages shall comply with either Section 3701.1 or shall be of type II-B construction.

Section 3702 Walls and fences in commercial and industrial zones. Any wall or fence built, constructed, or erected within a commercial or industrial zone shall be of noncombustible material.

EXCEPTIONS:

(1) Protective walls or fences erected for the duration of a construction, demolition or alteration operation may be constructed of combustible material.

(2) A temporary wall or fence erected to close the front or rear portion of a business building pending occupancy may be constructed of combustible material provided such opening is filled entirely. Such enclosure shall be permitted to be used for a period not exceeding one year.

Section 3703 Special regulations in Very High Fire Hazard Severity Zone. The following special regulations shall be applicable to all building and structures used for human occupancy in the Very High Fire Hazard Severity Zone as defined in the City's Fire Code.

Section 3703.1 Exterior walls and eaves shall be of one-hour fire-resistive construction.

Section 3703.2 Buildings or structures constructed over slopes shall have all under-floor and deck areas enclosed, and such enclosures shall be of one-hour fire resistive construction.

Section 9-1.203 Amendments to Appendix to California Building Code.

The Appendix to the California Building Code is hereby amended as follows:

Appendix G114 is hereby added to the California Building Code as follows:

Section G114.1 Purpose: The provisions of this division are intended to promote public safety and welfare by reducing the risk of flood damages in areas prone to flooding.

Section G114.2 Scope: Buildings and structures erected in areas prone to flooding shall be constructed as required by the provisions of this division. The base flood elevation shown on the approved flood hazard map is the minimum elevation used to define areas prone to flooding, unless records indicate a higher elevation is to be used. The flood-prone areas are defined in the jurisdiction's floodplain management ordinance.

Section G114.3 Definitions: For the purpose of this division, certain terms are defined as follows:

BASE FLOOD ELEVATION is the depth or peak elevation of flooding, including wave height, having 1 percent chance of being equaled or exceeded in any given year. BASE FLOOD ELEVATION is the elevation 22.5 inches above adjacent grade in area 1 and 16 inches above adjacent grade in area 2 as determined by the 100 year storm map on file in the Department of Building and Safety.

FLOOD HAZARD MAP is a map published by an approved agency that defines the flood boundaries, elevations and insurance risk zones as determined by a detailed flood insurance study.

HAZARD ZONES are areas that have been determined to be prone to flooding and are classified as either flood hazard zones, A zones, or coastal high-hazard zones, V zones, in

accordance with Section 3107.1 and 3108.1. HAZARD ZONES are areas which have been determined by the City to be prone to flooding and are classified as flood hazard zones.

SECTION G114.4 PROTECTION OF MECHANICAL AND ELECTRICAL SYSTEMS

New or replacement electrical equipment and heating, ventilating, air conditioning and other service facilities shall be either placed above the base flood elevation or protected to prevent water from entering or accumulating within the system components during floods up to the base flood elevation. Installation of electrical wiring and outlets, switches, junction boxes and panels below the base flood elevation shall conform to the provisions of the Electrical Code for such items in wet locations.

SECTION G114.5 FLOOD HAZARD ZONES – A ZONES

Section G114.5.1 General: Areas that have been determined as prone to flooding by not subject to wave heights of more than 3 feet (914 mm) are designated as flood hazard zones. Building or structures erected within a flood hazard zone shall have the lowest floor, including basement floors, located at or above the base flood elevation.

EXCEPTIONS: 1. Except for Group R Occupancies, any occupancy may have floors below the base flood elevation in accordance with this Section.

2. Except for Group R occupancies, floors of buildings or structures which are used only for building access, exits, foyers, storage and parking garages may be below the base flood elevation.

Section G114.5.2 Enclosures below Base Flood Elevation. Enclosed spaces below the base flood elevation shall not be used with the exception of building access, means of egress, foyers, storage and parking garages. Enclosed spaces shall be provided with vents, valves or other openings that will automatically equalize the lateral pressure of waters acting on the exterior wall surfaces. The bottom of the openings shall not be higher than 12 inches (305 mm) above finish grade. A minimum of two openings per building or one opening for each enclosure below the base flood elevation, whichever is greater, shall be provided. The total net area of such openings shall not be less than 4 square feet (0.37 m2) or 1 square inch for every square foot (0.007 m2 for every 1 m2) of enclosed area, whichever is greater.

Section G114.5.3 Flood-resistant Construction. Buildings or structures of any occupancy other than Group R may, in lieu of meeting the elevation provisions, be erected with floors usable for human occupancy below the base flood elevation, provided the following conditions are met:

1. Space below the base flood elevation shall be constructed with exterior walls and floors that are impermeable to the passage of water.

2. Structural components subject to hydrostatic and hydrodynamic loads during the occurrence of flooding to the base flood elevation shall be capable of resisting such forces, including the effect of buoyancy.

3. Openings below the base flood elevation shall be provided with watertight closures and shall have adequate structural capacity to support flood loads acting upon closure surfaces.

4. Floor and wall penetrations for plumbing, mechanical and electrical systems shall be made watertight to prevent flood water seepage through spaces between penetration and wall construction materials. Sanitary sewer and storm drainage systems that have openings below the base flood elevation shall be provided with closure devices to prevent backwater flow during conditions of flooding.

Section G114.5.4 Plan Requirements for Flood-resistant Construction. When buildings or structures are to be constructed in accordance with this Section, an architect or engineer licensed by the state to practice as such shall prepare plans showing details of the floor wall and foundation support components. Calculations and approved technical data used to comply with the conditions of this Section shall also be provided.

SECTION G114.5.5 ELEVATION CERTIFICATION

A land surveyor, architect or engineer licensed by the state to practice as such shall certify that the actual elevation in relations to mean sea level of the lowest floor, if in a flood hazard zone, or the bottom of the lowest horizontal structural member if in a coastal high-hazard zone, are at or above the minimum elevation when required by the provisions of this Section.

Appendix J104.3 is hereby amended by adding a sentence at the end of section J104.3 as follows:

Section J104.3 *** In addition, the soils report shall specify whether methane hazard exists on site. If methane hazard exists, a licensed Architect, registered Engineer or Geologist shall submit a report to the satisfaction of the City Building Official which includes, but is not limited to, the results of the testing procedure and the proposed mitigation measures.

Section J104.5 is hereby added to the California Building Code as follows:

Section J104.5 Slope failure reports. In addition to any other requirements set forth in this chapter, for Class I slope failures, the permit applicant shall submit to the building official a combined soils engineering and engineering geology report to address its cause and provide recommended repair methods. For Class II slope failures, the permit applicant shall submit to the building official an engineering geology report to address its cause and provide recommended repair methods. For Class III slope failure, unless there exist other conditions which, in the opinion of the building official, require the submission of soils engineering or engineering geology reports, the permit applicant shall not be required to submit such reports.

Appendix J112 is hereby added to the California Building Code as follows:
Section J112 Hazardous Conditions.

Section J112.1 Notices. Whenever the City Building Official determines by inspection that any existing excavation or fill or other condition of the soil from any cause has become a menace to life or limb, or endangers property, or affects the safety, usability, or stability of a public way, the owner of the property upon which such excavation, fill, or other condition of the soil is located, or other person or agent in control of such property, upon receipt of a notice in

writing from the City Building Official so to do, within ninety (90) days after the date of such written notice, shall repair and reconstruct such excavation, fill, or other condition of the soil so that it conforms to the requirements of this Chapter, or otherwise repair, strengthen, or eliminate such excavation, fill, or other condition of the soil in a manner satisfactory to the City Building Official to eliminate the danger. The City Building Official may designate a shorter period of time for elimination of the condition if an imminent and immediate hazard is found to exist.

Section J112.2 Reports. In the event the owner or other person or agent in control of such property fails to comply with the notice to repair or reconstruct such excavation, fill, or other condition of the soil, the City Building Official may submit a written report to Council requesting authorization to proceed in performing the work specified in such written notice, and assess the costs of such work as a special assessment against the property.

Section J112.3 Hearings. Upon the receipt of such a report, the Council may fix a time, date, and place for a hearing on such report and any protests or objections thereto. At least ten (10) days prior to the hearing a notice of the hearing shall be served by certified mail, postage prepaid, addressed to the owner of the property at his last known address, and to each holder of any security interest in the real property.

Section J112.4 Authorizing work. On conclusion of the hearing, the Council may by resolution confirm the report of the City Building Official and order the repair or reconstruction of such excavation, fill, or other condition of the soil by the City.

Section J112.5 Levy and assessment. Upon the completion of the repair or reconstruction of such excavation, fill, or other condition of the soil by the City, the City Building Official will transmit a final statement of the total direct and indirect costs of such work to the Council, which will by resolution fix the time, date, and place for hearing such statement in accordance with the provisions of this code. Upon the date fixed for the hearing, the Council will hear the report of the City Building Official, together with any objections or protests thereto, and may then by resolution order the costs of the work to be paid and levied as a special assessment against the property. The City Clerk will then transmit a copy of the resolution to the County Auditor-Collector directing that the amount designated to be collected concurrently with the next installment of real property taxes on the property involved.

Appendix Section J113 is hereby added to the California Building Code as follows:
Section J113 Bonds.

Section J113.1 Bonds required. The City Building Official may require the posting of a bond prior to issuance of a permit where the nature of the work, if commenced and allowed to remain in an uncompleted state, would create a hazard to human life or endanger adjoining or other property, any street or street improvement, or any other public property. The bond shall be in an amount sufficient to cover the cost of eliminating any dangerous condition or geological hazard if the project is not properly performed or is not completed in a timely manner. The bond shall comply with the provisions of Title 3, Chapter 4 of the Beverly Hills Municipal Code.

Section J113.2 Right of entry. In the event of any default in any performance of any term or condition of the permit for the work, the surety, or any person employed or engaged on its behalf, or the City Building Official, or any person employed or engaged on his behalf, shall have the right to go upon the premises to complete the required work or make it safe.

Section J113.3 Interference prohibited. No person shall interfere with or obstruct the ingress or egress to or from any such premises by any authorized representative or agent of any surety or of the City engaged in completing the work required to be performed under the permit or in complying with the terms or conditions thereof.

Section 7. Section 9-1.301 of Article 3 of Chapter 1 of Title 9 of the Beverly Hills Municipal Code is hereby repealed, provided, however, that such repeal shall not affect or excuse any violation of said Section 9-1.301 occurring prior to the effective date of this ordinance. New Section 9-1.301 of Article 3 of Chapter 1 of Title 9 of the Beverly Hills Municipal Code is hereby added as follows:

Section 9-1.301 Adoption of the California Electrical Code. The 2007 edition of the California Electrical Code, including the annexes, but excluding annex G, is hereby adopted by reference, but subject to the amendments set forth in Section 9-1.302, and the same shall be known and may be cited as the Electrical Code of the City of Beverly Hills.

Section 8. Section 9-1.302 of Article 3 of Chapter 1 of Title 9 of the Beverly Hills Municipal Code is hereby repealed, provided, however, that such repeal shall not affect or excuse any violation of said Section 9-1.302 occurring prior to the effective date of this ordinance. New Section 9-1.302 of Article 3 of Chapter 1 of Title 9 of the Beverly Hills Municipal Code regarding amendments and additions to the California Electrical Code and its annexes are hereby added as follows:

Section 9-1.302 Amendments to California Electrical Code. The California Electrical Code adopted pursuant to Section 9-1.301 is hereby amended as follows:

Section 760-19 Residential Sprinkler Flow Alarms. Residential sprinkler flow alarm wiring shall meet one of the following requirements:

(1) Wiring shall originate at a panelboard and shall be kept separate from all other wiring except at the panelboard; or

(2) The alarm shall obtain power from a circuit supplying kitchen and/or bathroom lights.

Section 9. Section 9-1.401 of Article 4 of Chapter 1 of Title 9 of the Beverly Hills Municipal Code is hereby repealed, provided, however, that such repeal shall not affect or excuse any violation of said Section 9-1.401 occurring prior to the effective date of this ordinance. New Section 9-1.401 of Article 4 of Chapter 1 of Title 9 of the Beverly Hills Municipal Code is hereby added as follows:

Section 9-1.401 Adoption of California Mechanical Code. The 2007 edition of the California Mechanical Code, including the Appendix, but excluding Appendix Chapter 1, is hereby adopted by reference, and the same shall be known and may be cited as the Mechanical Code of the City of Beverly Hills.

Section 10. Section 9-1.402 of Article 4 of Chapter 1 of Title 9 of the Beverly Hills Municipal Code is hereby repealed, provided, however, that such repeal shall not affect or

excuse any violation of said Section 9-1.402 occurring prior to the effective date of this ordinance.

Section 11. Section 9-1.501 of Article 5 of Chapter 1 of Title 9 of the Beverly Hills Municipal Code is hereby repealed, provided, however, that such repeal shall not affect or excuse any violation of said Section 9-5.201 occurring prior to the effective date of this ordinance. New Section 9-5.201 of Article 5 of Chapter 1 of Title 9 of the Beverly Hills Municipal Code is hereby added as follows:

Section 9-1.501 Adoption of California Plumbing Code. The 2007 edition of the California Plumbing Code, including the Appendices thereto, but excluding Appendix Chapter 1, is hereby adopted by reference, but subject to the provisions of Section 9-1.502, and the same shall be known and may be cited as the Plumbing Code of the City of Beverly Hills.

Section 12. Section 9-1.502 of Article 5 of Chapter 1 of Title 9 of the Beverly Hills Municipal Code is hereby repealed, provided, however, that such repeal shall not affect or excuse any violation of said Section 9-1.502 occurring prior to the effective date of this ordinance.

Section 13. Section 9-1.601 of Article 6 of Chapter 1 of Title 9 of the Beverly Hills Municipal Code is hereby repealed, provided, however, that such repeal shall not affect or excuse any violation of said Section 9-1.601 occurring prior to the effective date of this ordinance. New Section 9-1.601 of Article 6 of Chapter 1 of Title 9 of the Beverly Hills Municipal Code is hereby added as follows:

Section 9-1.601. Adoption of Uniform Swimming Pool, Spa and Hot Tub Code. The Uniform Swimming Pool, Spa and Hot Tub Code, 2006 Edition, except for Part 1 thereof, published by the International Association of Plumbing and Mechanical Officials, is hereby adopted by reference, but subject to the provisions of Section 9-1.602.

Section 14. Section 9-1.602 of Article 6 of Chapter 1 of Title 9 of the Beverly Hills Municipal Code is hereby repealed, provided, however, that such repeal shall not affect or excuse any violation of said Section 9-1.602 occurring prior to the effective date of this ordinance. New Section 9-1.602 of Article 6 of Chapter 1 of Title 9 of the Beverly Hills Municipal Code regarding amendments and additions to the Uniform Swimming Pool, Spa and Hot Tub Code is hereby added as follows:

Section 9-1.602. Amendments to Uniform Swimming Pool, Spa and Hot Tub Code. The Uniform Swimming Pool, Spa and Hot Tub Code adopted pursuant to Section 9-1.601 is hereby amended as follows:

Section 327. No pool, pond, or fountain in the City having a capacity of over 2,000 gallons of water shall be drained or discharged into the public sewer until the Public Works Administrator has been notified and has authorized the time for such discharge.

Section 328. Fences for Swimming Pools and Excavations.

Section 328.1 Swimming Pool Enclosure. It shall be unlawful for any person, within the City, to construct, install or maintain in the City a swimming pool or excavation unless the same is enclosed or protected from entrance thereto by the following protective facilities or by other

facilities equally sufficient for the purpose of protecting the public, particularly children, from the hazards of swimming pools and excavations.

EXCEPTION: The foregoing shall not apply to excavations made in connection with public improvements for which a permit has been issued by the Transportation/Engineering Official, or in connection with the construction of structures or buildings for which a permit has been issued by the City Building Official; provided, however, that in such cases, the person making the excavation shall provide temporary barricades or other devices which will provide reasonable protection against the hazards herein referred to.

Section 328.1.1 Enclosure. All swimming pools and excavations shall be enclosed by a fence or wall not less than five (5') feet in height above the underlying ground. There shall be no openings, holes or gaps that allow passage of a sphere equal to or greater than four (4") inches in diameter. The vertical clearance from the ground to the bottom of the enclosure shall be two (2") inches or less. The outside surface of the enclosure shall be free of protrusions, cavities or other physical characteristics that would serve as handholds or footholds that could enable a child below the age of five years to climb over. Walls of dwelling and accessory buildings may be used to form part of the enclosure herein above required.

Section 328.1.2 Gates or Doors. Any gates or doors opening through the enclosure shall open away from the swimming pool, and be equipped with an approved self-closing and self-latching device which is placed no lower than 60 inches above the ground and shall be capable of keeping, such door or gate securely closed at all times when not actually in use; provided, however, that the door of any occupied dwelling and forming any part of the enclosure herein above required, need not be so equipped. Any gates other than pedestrian access gates shall be equipped with lockable hardware or padlocks and shall remain locked at all times when not in use.

Section 15. Section 9-2-1 of Article 1 of Chapter 2 of Title 9 of the Beverly Hills Municipal Code is hereby repealed, provided, however, that such repeal shall not affect or excuse any violation of said Section 9-2-1 occurring prior to the effective date of this ordinance. New Section 9-2-1 of Article 1 of Chapter 2 of Title 9 of the Beverly Hills Municipal Code is hereby added as follows:

Section 16. 9-2-1 Adoption of California Fire Code. The 2007 edition of the California Fire Code including the Appendix is hereby adopted by reference, excluding Section 903.3.1.2, and subject to the amendments set forth in Section 9-2-2, and the same shall be known and may be cited as the Fire Code of the City of Beverly Hills.

Section 17. Section 9-2-2 of Article 1 of Chapter 2 of Title 9 of the Beverly Hills Municipal Code are hereby repealed, provided, however, that such repeal shall not affect or excuse any violation of said Section 9-2-2 occurring prior to the effective date of this ordinance. New Section 9-2-2 of Article 1 of Chapter 2 of Title 9 of the Beverly Hills Municipal Code regarding amendments and additions to the California Fire Code and its Appendix is hereby added as follows:

Section 9-2-2 Amendments to California Fire Code. The Fire Code adopted pursuant to Section 9-2-1 is hereby amended as provided herein because of the special circumstances and conditions in the City:

Section 903.2 of the California Fire Code is hereby amended as follows:

Section 903.2 Where required. Approved automatic sprinkler systems in new building and structures shall be required for all occupancies, except U occupancies which are sheds that are less than five hundred (500) square feet.

Approved automatic sprinkler systems shall be required in all existing buildings if: (i) additions, alterations or repairs are made within any twelve (12) month period which exceed fifty percent (50%) of the value of such existing building, (ii) an addition is constructed which exceeds fifty percent (50%) of the square footage of the existing building, or (iii) an addition of more than five thousand (5,000) square feet is constructed.

Areas occupied by the following existing occupancies shall have installed an automatic fire-extinguishing system in compliance with this code:

(1) Throughout all existing eating establishments having a floor area in excess of three thousand (3,000) square feet.

(2) Throughout bowling alleys.

(3) Throughout public assembly occupancies having an occupant load of three hundred (300) or more persons. If such occupancies are located above the first floor, the floors below shall be provided with an automatic sprinkler system; provided further, public assembly occupancies of three hundred (300) or more persons placed in buildings existing prior to August 19, 1976, shall not be required to provide an automatic fire-extinguishing system in floors below such occupancy.

(4) Throughout hotels except those areas used exclusively for lodging.

(5) Throughout retail sales rooms classified as Group M and S occupancies if the floor area of all floors exceeds twelve thousand (12,000) square feet, and in Group M and S retail sales and storage occupancies more than three (3) stories in height, and in Group M and S occupancies, if such occupancies are located within the same building or structure as Group R-l occupancies. The area of mezzanines shall be included in determining the areas where sprinklers are required.

(6) Nightclubs and discos in rooms primarily used for entertaining occupants who are drinking or dining and unseparated accessory uses where the total area of such unseparated rooms and assembly uses exceeds three thousand (3,000) square feet. For uses to be considered "Separated," the separation shall be not less than is required for a one-hour occupancy separation.

(7) In every story or basement of all buildings if the floor area exceeds fifteen hundred (1,500) square feet and there is not provided at least twenty (20) square feet of opening entirely above the adjoining ground level in each 50 lineal feet or fraction thereof of exterior wall in the story or basement on at least one side of the building. Openings shall have a minimum dimension of not less than thirty (30) inches. Such openings shall be accessible to the fire department from the exterior and shall not be obstructed in a manner that fire fighting or rescue cannot be accomplished from the exterior.

When openings in a story are provided on only one side and the opposite wall of such story is more than seventy-five (75) feet from such openings, the story shall be provided with an approved automatic sprinkler system, or openings as specified above shall be provided on at least two sides of an exterior wall of the story.

(8) In elevator pits.

(9) In rooms where nitrate film is stored and handled.

(10) In protected combustible fiber storage vaults as defined in the Fire Code.

Section 903.3.1.1.1 is hereby amended by deleting item number 3 as follows:

3. Deleted.

Section 903.3.1.2 of the California Fire Code is hereby deleted.

Section 903.3.1.3.1 is hereby added to the California Fire Code as follows:

Section 903.3.1.3.1 Balconies and Decks.

Sprinkler protection shall be provided for exterior overhangs, balconies, decks, and ground floor patios of dwelling units exceeding four (4) feet in width.

Section 903.3.7 of the California Fire Code is hereby amended as follows:

Section 903.3.7 Fire Department Connections.

The location and size of fire department connections shall be approved by the fire code official.

Section 903.4 of the California Fire Code is hereby amended as follows:

Section 903.4 Sprinkler system monitoring and alarms. All valves controlling the water supply for automatic sprinkler systems, pumps, tanks, water levels and temperatures, critical air pressures, and water-flow switches on all sprinkler systems shall be electrically supervised. Existing sprinkler systems totaling 20 sprinkler heads or more on one property being modified or altered shall be electrically supervised.

Section 903.4.2 of the California Fire Code is hereby amended as follows:

Section 903.4.2 Alarms

Approved audible devices shall be connected to every automatic sprinkler system. Such sprinkler water-flow alarm devices shall be activated by water flow equivalent to the flow of a single sprinkler of the smallest orifice size installed in the system. Alarm devices shall be provided on the exterior and interior of the building in an approved location to notify all

occupants. Where a fire alarm system is installed, actuation of the automatic sprinkler system shall actuate the building fire alarm system

Section 905.11 of the California Fire Code is hereby amended as follows:
Section 905.11 Standpipes.

Existing Buildings. Existing structures with occupied floors located 3 or more stories above or below the lowest level of fire department access shall be equipped with standpipes installed in accordance with Section 905. The standpipes shall have an approved fire department connection with hose connections at each floor level above or below the lowest level of fire department access. The fire code official is authorized to approve the installation of manual standpipe systems to achieve compliance with this section where the responding fire department is capable of providing the required hose flow at the highest standpipe outlet.

Section 907.10.1.1.1 is hereby added to the California Fire Code as follows
Section 907.10.1.1.1 All Use Areas

Visible alarm notification appliances shall be provided in all occupied rooms where ambient noise impairs hearing of the fire alarm including but not limited to residential home theaters.

Section 1020.1.6 of the California Fire Code is hereby amended as follows:

Section 1020.1.6 Stairway Floor Number Signs Standardized signs shall be provided in new and existing buildings that are two (2) or more stories in height. Such signs shall be installed on the interior of the stairways on each floor and on the exterior door of each stair door at the ground level, to identify each stair landing and indicate the upper and lower termination of the stairway.

Section 2403.2 of the California Fire Code is hereby amended as follows:

Section 2403.2 Approval required. Tents and membrane structures having an area in excess of forty (40) sq ft and canopies in excess of forty (40) sq ft shall not be erected, operated or maintained for any purpose without first obtaining a permit and approval from the fire code official.

Section 2403.5 of the California Fire Code is hereby amended as follows:

Section 2403.5 Use Period.

Unless otherwise authorized by the City Building Official, no tent, awning, canopy or temporary membrane structure in excess of forty (40) square feet shall be erected or maintained on private property within the City in excess of ten (10) days.

Section 3301.2 is hereby added to the California Fire Code as follows:

Section 3301.2 Fireworks Prohibited.

No person shall manufacture, store, offer for sale or discharge any fireworks in the City; provided further, fireworks may be discharged in conjunction with a city sponsored event.

Section 4706 of the California Fire Code is hereby amended as follows:

Section 4706 Vegetation management

Section 4706.1 General.

A. Definitions. For purposes of this section, the following definitions shall apply:

1. Vegetative Growth. Any native brush, or weeds, or grass, or specimen native shrub, or any live, or dead organic material as designated by the fire chief.

2. Very High Fire Hazard Severity Zone. That area included within the boundaries described and set forth in a map maintained by the fire chief on file in the office of the fire prevention bureau.

3. Native Brush. All varieties of vegetative growth other than trees, that are indigenous to and found within the very high fire hazard severity zone except those plants that are identified as 'fire resistive plants' in a list established and maintained by the fire chief.

4. Specimen Native Shrub. An individual shrub that is within the definition of 'native brush' and that is trimmed up one-third of its height or six (6') feet above the ground, whichever is less, and from the vicinity of which has been removed all dead wood, duff, and combustible litter; and that is not among those plants identified as 'extremely hazardous native brush' in a list established and maintained by the fire chief.

5. Structure. That which is built or constructed, including an edifice or building of any kind, or any piece of work artificially built up or composed of parts joined together in some definite manner.

6. Fuel Modification Zone. The area existing between one hundred (100') feet and two hundred (200') feet, in any direction from any structure, unless otherwise specified by the chief.

B. Required Maintenance. Persons owning, leasing, controlling, operating or maintaining buildings or structures in, upon or adjoining very high fire hazard severity zone fire areas, and persons owning, leasing or controlling land adjacent (within 200 feet) to such buildings or structures, shall at all times comply with the following requirements:

1. Maintain all native brush, weeds, grass, and hazardous vegetation situated within one hundred feet (100') of ANY structure, regardless of whether said structure is located upon such land or upon adjacent land shall be

maintained at a height of not more than three inches (3") above the ground.

2. Reduce the fuel load within the fuel modification zone (100' to 200') around any structure regardless of whether said structure is located upon such land or upon adjacent land.

EXCEPTION: Specimen native shrubs may be retained throughout the first 100 feet provided they are: spaced at a distance not less than eighteen feet (18') from other native shrubs, brush or structures; maintained free of dead wood and litter; and trimmed up at least six feet (6') from the ground or 1/3 of their height, whichever is less.

3. Maintain all native brush, weeds, grass and hazardous vegetation within ten feet (10') of any combustible fence shall be maintained at a height of not more than three inches (3") above the ground.

4. Remove all trees, shrubs, bushes, and other growing vegetation or portions thereof, adjacent to or overhanging any structure shall be kept free of dead limbs, branches, and other combustible matter.

5. Maintain all trees shall be trimmed up five feet (5') from the ground and maintained so that no portion is closer than ten feet (10') from the outlet of any chimney.

6. Maintain five feet (5') of vertical clearance between roof surfaces and portions of trees overhanging any building or structure.

7. Maintain all roof structures shall be kept free of substantial accumulations of leaves, needles, twigs, and other combustible matter.

8. Remove all cut vegetation and debris and legally disposed of. All vegetation, native or otherwise, shall be maintained so as not to constitute a fire hazard or public nuisance.

9. Clear all hazardous vegetation and other combustible growth within the first one hundred feet (100') surrounding all structures. Reduce the amount and/or modify the arrangement of hazardous vegetation within the fuel modification zone.

10. Prune the branches from the lower third of any native plants kept in this area. If the plant is over eighteen (18') feet in height, only the lower six feet (6') must be pruned. Heavy brush must be 'trimmed up' so that all foliage in the lower third of the plant is removed. Remove any dead plants (leave the lowest three inches (3") and root structure to help prevent erosion.)

11. Remove dead material from live plants.

12. Remove or process all cut vegetation as follows: may be machine processed and left on the property to a maximum depth of three

inches (3"), so long as none of the material is left within one hundred feet (100') of any structure. Machine processed material shall not be placed within ten feet (10') of usable road surfaces or driveways.

13. Maintain all landscape vegetation, including, but not limited to, conifers (e.g., cedar, cypress, fir, juniper, and pine), eucalyptus, acacia, palm and pampas grass in such a condition as not to provide an available fuel supply to augment the spread or intensity of a fire.

C. Authority Of The Fire Chief To Modify Brush Clearing Requirements. If the fire chief determines in any specific case that difficult terrain, danger of erosion, or other unusual circumstances make strict compliance with the clearance of vegetation provisions of this section undesirable or impractical, he may suspend the enforcement thereof and require reasonable alternative measures. Nothing contained in this subsection shall be deemed to preclude the chief from requiring more than the minimum specific requirements set forth above when the chief determines that conditions exist which necessitate greater fire protection measures.

D. Issuance Of Brush Clearance Notice. In addition to any other remedies for violations provided by law, including those remedies set forth in this Code, the fire department may issue a "vegetation clearance notice" to the record owner and any tenant, lessee or other possessor of the affected properties, specifying the condition(s) required to be corrected, and setting forth a date by which corrective action must be taken. The fire department may take corrective action *at the owner's expense* in the event the required correction is not completed. If the owner fails to pay the cost incurred by the fire department to correct such condition(s) following notice of the cost and an opportunity to be heard, the city council may make the expense a lien upon the property where such condition exists.

Section 4706.2. Clearance of Brush or Vegetative Growth from Roadways.

All native brush, weeds, grass and hazardous vegetation situated within ten (10') feet of the outer edge or edges of the usable road surface of any highway, street, alley or driveway serving more than one residence shall be maintained at a height of not more than three (3") inches above the ground.

Section 103.2.1 is hereby added to Appendix Chapter 1 of the California Fire Code as follows:

Section 103.2.1 Fire Prevention Bureau personnel and Police.

(1) The Chief and members of the Fire Prevention Bureau shall each have the powers of a police officer in performing their duties under this Code.

(2) Members of the Fire Department may act as Peace Officers only as permitted by Section 830.37 of the California Penal Code. All members of the Fire Department with the rank of Captain or above and all members of the Fire Prevention Bureau who are peace officers as defined in Section 830.37 of the Penal Code and members who have been designated by the Fire Chief as Arson Investigators and who have satisfactorily completed the courses of training required by Section 832 of the Penal Code are designated as peace officers for the purposes of Section 171c, 171d, 12027 and 12031 of the Penal Code while engaged as members of an arson investigating unit, regularly employed and paid as such, in the detection and

apprehension of persons who have violated or who are suspected of having violated any fire law, or while exclusively engaged in the enforcement of law as relating to fire prevention and fire suppression.

(3) When requested to do so by the Chief, the Chief of Police is authorized to assign such available police officers as necessary to assist the Fire Department in enforcing the provisions of this code.

Section 109.3.2 is hereby added to Appendix Chapter 1 of the California Fire Code as follows:

Section 109.3.2 Citations.

Persons operating or maintaining an occupancy, premises or vehicle or performing work which requires a permit by this code, who allow a hazard to exist or fail to take immediate action to abate a hazard on such occupancy, premises or vehicle or who fail to obtain a permit prior to start of work which requires such a permit under this code, when ordered or notified to do so by the Chief, shall be guilty of a misdemeanor.

Appendix Chapter 1, Section 110 is hereby amended by adding section 110.1.3 to the California Fire Code as follows:

Section 110.1.3 Warning signs.

Whenever the Chief shall determine that warning signs are required in the protection of persons or property from injury due to unauthorized entry into dangerous structures or buildings, he shall order such buildings or structures adequately posted with signs reading, "WARNING UNSAFE DO NOT ENTER BY ORDER OF THE BEVERLY HILLS FIRE DEPARTMENT."

It shall be unlawful for any person to enter or remain within any such posted structures or building, except that public officers acting in the course of duty, and representatives of public or private utilities, shall be exempt from the provisions of this section.

Section 18. Penalty. Except where specified to be an infraction, violation of any provision of this Ordinance or any Code adopted herein by reference shall constitute a misdemeanor and shall be punishable by a fine not to exceed one thousand dollars ($1,000) or by imprisonment for a period not to exceed six (6) months, or by both such fine and imprisonment. Each and every day such a violation exists shall constitute a separate and distinct violation of this Ordinance.

Section 19. Civil Remedies. The violation of any of the provisions of this Ordinance or any Code adopted herein by reference shall constitute a nuisance and may be abated by the City through civil process by means of restraining order, preliminary or permanent injunction or in any other manner provided by law for the abatement of such nuisances.

Section 20. Severability. The City Council declares that, should any provision, section, paragraph, sentence, or word of this Ordinance be rendered or declared invalid by any final court action in a court of competent jurisdiction, or by reason of any preemptive legislation, the remaining provisions, sections, paragraphs, sentences and words of this Ordinance shall remain in full force and effect.

Section 21. The City Clerk shall certify to the adoption of this Ordinance.

Section 22. This ordinance shall go into effect and be in full force and effect at 12:01 a.m. on the thirty-first (31st) day after its passage.

Adopted:

CITY OF BEVERLY HILLS
A Municipal Corporation

JIMMY DELSHAD
Mayor of the City of
Beverly Hills

ATTEST:

(SEAL)
BYRON POPE
City Clerk

APPROVED AS TO FORM:

LAURENCE S. WIENER
City Attorney

APPROVED AS TO CONTENT:

for RODERICK J. WOOD
City Manager

for VB
VINCENT P. BERTONI, AICP
Director of Community Development

FOR DTG
DALE T. GELDERT
Fire Chief