Attachment 2

AGREEMENT BETWEEN THE CITY OF BEVERLY HILLS AND CLIMATEC, LLC FOR ENERGY PERFORMANCE SERVICES

COVER PAGE

WORK NAME:	Energy Performance Contract
SHORT DESCRIPTION:	Various Energy Conservation Measures to improve reduced energy usage and cost in facilities City-wide.
NAME OF CONTRACTOR:	CLIMATEC, LLC
CONTRACTOR'S ADDRESS:	18002 Cowan Irvine, CA 92614-6812 Attention: Charlie Whittenton, Business Manager
CITY'S ADDRESS:	City of Beverly Hills 455 N. Rexford Drive Beverly Hills, CA 90210 Attention: Chad Lynn, Assistant Director of Public Works Services
TERM OF CONTRACT:	Start: Upon written notice to proceed Termination: Upon completion as determined by City
NUMBER OF CALENDAR DAYS FROM CITY ENGINEER'S NOTICE TO PROCEED FOR CONTRACTOR TO COMMENCE WORK:	30 Calendar days notice
CALENDAR DAYS FOR COMPLETION OF WORK:	365 days
CONTRACT AMOUNT:	Not to exceed $3,277,843 without Optional services: Fixed price $2,979,858; plus a contingency amount not to exceed $297,985 Optional services $217,778, as more fully described in Appendix A.
CONTRACTOR'S LICENSE NUMBER	991066
REQUIRED LICENSE CLASSIFICATION	B

AGREEMENT BETWEEN THE CITY OF BEVERLY HILLS AND CLIMATEC, LLC FOR ENERGY PERFORMANCE SERVICES

THIS CONTRACT (the "Contract"), made and entered into this ____ day of _____, 2015 by and between the CITY OF BEVERLY HILLS, a municipal corporation, hereinafter referred to as "City", and Climatec, LLC hereinafter referred to as "Contractor";

W I T N E S S E T H

In this consideration of their covenants, the parties hereto agree as follows:

PAYMENT. In consideration of the Work as defined herein, City agrees to pay Contractor for the satisfactory performance by Contractor of all work required under this Contract and Contractor agrees to accept as full consideration of all work required under this Contract the Contract Amount set forth on the Cover Page of this Contract as bid for the work, payable as provided in Appendix A "Payment Procedures," which is attached hereto and incorporated herein by this reference.

Section 1. PERFORMANCE PERIOD. Contractor shall commence and complete Work in the time required on the Cover Page.

A. If the Work is not completed in full within the time specified in this Contract, the City shall have the right to grant or deny an extension of time for completion, as may seem best to serve the interest of the City.

B. In addition to Standard Specifications Section 6-6.1, the Contractor shall not be assessed with liquidated damages during any delay in the completion of the Work caused by unforeseen events, provided that the Contractor shall, within ten (10) days from the beginning of such delay, notify the City in writing of the cause of the delay. The City will ascertain the facts and the extent of the delay, and the City's findings thereon shall be final and conclusive.

Section 2. WORK TO BE PERFORMED.

A. **Scope of Work**. Contractor shall furnish at Contractor's own expense all labor, materials, supplies, equipment, tools, parts, implements, transportation and other items of expense necessary for, or appurtenant to, the installation, construction and completion in a workmanlike manner of the Work identified on the Cover Page as indicated in the quote provided by Contractor, which is attached hereto as Appendix B and incorporated herein by this reference (the "Work") and in accordance with the terms and conditions of this Contract and the plans and specifications for this Work, which are incorporated by this reference.

B. The current City of Beverly Hills Standard Drawings and Specifications (the "City Specifications") are incorporated herein by reference, and Contractor shall install all work pursuant to those standard drawings and specifications. Additionally, the Work shall be done in accordance with the most current provisions of the "Standard Specifications for Public Works

Construction" (commonly known as "the Greenbook"), prepared and promulgated by the Southern California Chapter of the American Public Works Association and the Associated General Contractors of California, which specifications are hereinafter collectively referred to as the "Standard Specifications" and are incorporated herein by this reference. This Contract, the City Specifications and the Standard Specifications are to be read harmoniously when possible. In the event of a conflict, the provisions of the City Specifications shall apply and shall supersede provisions of the Standard Specifications. In the event of a conflict between this Contract and either of the other two documents, the more stringent provision shall apply.

Section 3. SPECIAL CONDITIONS

A. Storage will be limited to the Work area.

B. Contractor shall provide all temporary structures, measures, apparatus and services required to prosecute the Work of this bid package.

C. **Utilities**. All utility service and building system connections or required interruptions shall be coordinated in advance with the City.

1. The Contractor shall verify the location of all underground utilities and services before proceeding with excavation work, requesting in advance the services of inspectors from the utility companies in order to ascertain said locations. Damage to underground utilities resulting from neglect on the part of the Contractor shall be corrected and paid for by the Contractor.

2. The Contractor shall notify all owners of public utilities 48 hours in advance of excavating around any of their substructures, and shall also provide the same notice to Underground Service Alert of Southern California. Upon request, the City Engineer will furnish the Contractor a list of the various offices and numbers to call.

D. **Trash Removal**. Rubbish, debris, waste, dust or surplus materials shall not be allowed to accumulate and shall be removed continuously and disposed of by the Contractor as the work progresses. A specific rubbish removal company is allowed to operate within the City: Recology, at phone number 800-633-9933.

E. **Drawings, Warranties and Service Manuals**. Contractor shall submit all as-built drawings, warranties and service manuals upon completion of the work.

F. **Materials and Workmanship**.

1. The City shall have the right to inspect any material used. Material furnished shall be new, complete, ready-for-use and of the latest model, shall not have been used in demonstration or other services and shall have all the usual equipment as shown by its manufacturer's current specifications and catalogs, unless otherwise specified. Equipment, supplies or services that fail to comply with the Contract requirements regarding design, material or workmanship may be rejected at the option of the City. Any materials rejected shall be removed from Work premises at the Contractor's sole expense.

2. All work must be approved by the City. For unsatisfactory work not corrected, the City may, at its option, withhold payment for the unsatisfactory work, deduct the amount from the invoiced amount, have the work corrected by another contractor at Contractor's cost and expense, or perform the corrective work with City personnel and deduct all costs so incurred by the City from moneys owed to the Contractor.

G. **License and Permits**. Except as provided in this Subsection, the Contractor shall obtain and pay for all permits and licenses required by federal, state or local law, rule or regulation and pay all charges and fees and give all notices necessary and incidental to the due and lawful prosecution of the work. Costs for obtaining City permits required under this Contract will be waived. NOTE: All requirements for obtaining permits (including City permits) remain in effect and are not waived; only the costs of City permits are waived. For information concerning business licenses required under the Beverly Hills Municipal Code, contact the Beverly Hills Finance Department.

H. **Changes to the Work**.

1. When the Contractor considers that any change order in writing by the City involves extra work, the Contractor shall immediately notify the City in writing as to when and where extra work is to be performed and shall make a claim for compensation therefor each month not later than the first day of the month following that in which the work claimed as extra work was performed. If the changes do, in the opinion of the City, change the amount of work, the Contract Amount shall be adjusted as "extra work".

2. New and unforeseen work will be classed as extra work only when said work is not covered and cannot be paid for under any of the various items or combination of items for which a bid price appears on the proposal form. The Contractor shall not do any extra work except upon written order from the City Engineer. Compensation for such extra work shall be previously agreed upon in writing between the Contractor and the City Engineer.

3. Extra work, when ordered and accepted pursuant to paragraph 1 of this Subsection, shall be paid for under a written work order in accordance with the terms therein provided. Payment for extra work will be made at the unit price or lump sum previously agreed upon between Contractor and prepared by the City Engineer. All extra work shall be adjusted daily upon report sheets prepared by the City Engineer, furnished to the Contractor, and signed by both parties, and said daily reports shall be considered thereafter the true record of extra work done.

Section 4. TERMINATION OF WORK.

A. **For Cause**. Upon notice to Contractor, City may terminate the Work or any part thereof immediately for cause, without any prior notification to Contractor.

B. **Without Cause**. City may terminate the Work or any part thereof upon five (5) days prior notice to Contractor.

C. **Payment**. Upon termination of the Contract in whole or in part, City shall pay Contractor, subject to all provisions of the Contract for retention of funds, for all Work performed to the City's satisfaction prior to the date of termination.

Section 5. BONDS AND INSURANCE. Prior to the execution of this Contract, Contractor shall file with the City the bonds and certificates of insurance specified herein.

A. **Bonds.** Contractor shall adhere to all bonding requirements listed in Standard Specifications Section 2-4. Additionally, the required bonds shall be filed in the forms attached hereto as Appendices C and D and incorporated herein by this reference. There must be on file with the City Clerk of the City of Beverly Hills or submitted with the bond, a copy, duly certified by the proper authority and attested by the seal of the corporation, of the transcript or record of appointment entitling or authorizing the person or persons purporting to execute an undertaking or bond for and on behalf of such corporation to act in the premises.

B. **Insurance and Workers' Compensation**. Contractor shall procure and maintain for the duration of this Contract, insurance against claims for injuries to persons or damages to property which may arise from or in connection with the performance of the Work by the Contractor, his agents, representatives, employees or subcontractors, pursuant to this Contract. Insurance, together with an endorsement, shall be of the type, in the amounts and subject to the provisions described below.

1. As required in Standard Specifications Section 7-3.2, the Contractor must obtain **commercial general liability** coverage at least as broad as Insurance Services Office Commercial General Liability occurrence coverage ("occurrence" form CG0001, Ed. 11/88) with a limit of not less than $2,000,000 per occurrence. If the insurance includes a general aggregate limit, that limit shall apply separately to this contract or it shall be at least twice the required per occurrence limit.

2. As required in Standard Specifications Section 7-3.4, the Contractor must obtain **business automobile liability** insurance at least as broad as Insurance Services office form CA 0001 (Ed. 12/90) covering Automobile Liability, code 1 "any auto" and endorsement CA 0029 (Ed. 12/88) with a limit not less than $1,000,000 per accident.

3. **Workers' Compensation** In addition to the requirements in Standard Specifications Section 7-3.3, workers' compensation insurance shall be as required by the State of California and employers liability insurance with a limit not less than $1,000,000 per accident.

4. **Evidence of Coverage:**

(a) In addition to the requirements in Standard Specifications Section 7-3.1, prior to commencement of work under this Contract, Contractor shall file certificates of insurance, in the forms attached hereto as Appendices E and F and incorporated herein by this reference, or on forms approved in writing by the City's Risk Manager, and with original endorsements evidencing coverage in compliance with this Contract.

(b) Contractor shall provide to City, on request, a complete copy, including all endorsements and riders, of any insurance policy.

(c) During the term of this Contract, Contractor shall maintain current valid proof of insurance coverage with City at all times. Proof of renewals shall be filed prior to expiration of any required coverage and shall be provided on the City's standard proof of insurance form.

(d) Failure to submit any required evidences of insurance within the required time period shall be cause for termination for default.

(e) In the event Contractor does not maintain current, valid evidence of insurance at the required minimum amounts or more on file with City throughout the duration of the Contract, City may, at its option, withhold payment of any moneys owed to Contractor, or which it subsequently owes to Contractor, until proper proof is filed.

(f) Each insurance policy shall be endorsed to state that coverage shall not be suspended, voided or canceled and shall not be reduced in coverage or limits except after 30 days prior written notice provided to the City. Upon prior request of the carrier, the notice period may be reduced to 10 days in the event of non-payment of premium.

(g) All liability coverages shall name the City, its City Council and every officer, agent and employee of City as additional insureds with respect to work under this Contract.

(h) Contractor's insurance and any insurance provided in compliance with these specifications shall be primary with respect to any insurance or self-insurance programs covering the City, its City Council and any officer, agent or employee of City.

(i) Where available, the insurer shall agree to waive all rights of subrogation against the City, its City Council and every officer, agent and employee of City. Any deductibles or self-insured retentions shall be declared to and must be approved by City. At the option of the City, either the insurer shall reduce or eliminate the deductibles or self-insured retentions as respects the City, or the Contractor shall procure a bond guaranteeing payment of losses and expenses.

(j) In the event that Contractor does not provide continuous insurance coverage, the City shall have the right, but not the obligation, to obtain the required insurance coverage at Contractor's cost, and the City may deduct all such costs from moneys the City owes to the Contractor or from moneys which it subsequently owes to the Contractor, or Contractor shall owe the City this amount.

Section 6. LEGAL RELATIONS AND RESPONSIBILITY TO THE CITY

A. **Laws to Be Observed.** The Contractor shall be knowledgeable of all existing and pending State and federal laws and all municipal ordinances and regulations of the City, which in any manner affect those employed in the Work or the material used in the Work, or which in any way affect the conduct of the Work, and of all such orders and decrees of bodies or tribunals having jurisdiction or authority over the same. The Contractor shall particularly observe all ordinances of the City in relation to the obstruction of streets or conduct of the work, keeping open passageways and protecting the same where they are exposed or dangerous to traffic.

B. **Social Security Requirements**. The Contractor shall furnish to the City satisfactory evidence that he/she and all subcontractors are complying with all requirements of the Federal and State Social Security legislation. The Contractor, at any time on request, shall satisfy the City that the Social Security and Withholding Tax are being properly reported and paid.

C. **Labor Laws and Prevailing Wages**. This Work is a "public work," and thus, the Contractor shall pay to all employees, and shall cause all subcontractors to pay to all employees, in accordance with the determination of the Director of the Department of Industrial Relations ("DIR") regarding the prevailing rate of per diem wages. Contractor shall execute simultaneously with the execution of this Contract the Statement Acknowledging Obligation to Comply with California Labor Law, which is attached hereto as Appendix G and incorporated herein by this reference.

D. **Registration of Contractors**. Only a Contractor licensed in accordance with the provisions of Chapter 9, Division 3 of the Business and Professions Code shall be permitted to enter into a contract with the City for any public improvement. The Contractor shall at all times possess a valid California Contractor's license in the class required on the Cover Page of this Contract.

E. **Registration with the Department of Industrial Relations.** The Contractor and all its subcontractors shall comply with Labor Code Section 1725.5, subject to the requirements of Public Contract Code Section 4104, which requires that the Contractor and its subcontractors shall be registered with the Department of Industrial Relations and qualified to perform a public work pursuant to Labor Code 1725.5.

F. **Debarment or Suspension**. Contractor and all subcontractors shall not be debarred or suspended throughout the duration of this Contract pursuant to Labor Code Section 1777.1 or 1777.7. If Contractor or any subcontractor becomes debarred or suspended throughout the duration of the Work, Contractor shall immediately notify City.

G. **Patents**. The Contractor shall assume all responsibility arising from the use of any patented, or allegedly patented, materials, equipment, devices, or processes used on or incorporated in the Work, and shall defend, indemnify, and hold harmless the City, and each of its officers, agents, and employees from and against any and all liabilities, demands, claims, damages, losses, costs, and expenses, of whatsoever kind or nature, arising from such use.

H. **Indemnity**. The following indemnity provisions shall supersede the indemnity in Section 7-3 of the Standard Specifications.

1. **Contractor's Duty**. To the maximum extent permitted by law, Contractor hereby agrees, at its sole cost and expense, to defend with competent defense counsel approved by the City Attorney, protect, indemnify, and hold harmless the City, its elected and appointed officials, officers, employees, volunteers, attorneys, agents (including those City agents serving as independent contractors in the role of City representative), successors, and assigns (collectively "Indemnitees") from and against any and all claims (including, without limitation, claims for bodily injury, death or damage to property), demands, charges, obligations, damages, causes of action, proceedings, suits, losses, stop payment notices, judgments, fines, liens,

penalties, liabilities, costs and expenses of every kind and nature whatsoever, in any manner arising out of, incident to, related to, in connection with or resulting from any intentional, reckless, negligent, or otherwise wrongful act, failure to act, error or omission of Contractor or any of its officers, agents, attorneys, servants, employees, subcontractors, material suppliers or any of their officers, agents, servants or employees, arising out of, incident to, related to, in connection with or resulting from any term, provision, image, plan, covenant, or condition in the Contract Documents, including without limitation, the payment of all consequential damages, attorneys' fees, experts' fees, and other related costs and expenses (individually, a "Claim," or collectively, "Claims"). Contractor shall promptly pay and satisfy any judgment, award or decree that may be rendered against Indemnitees in any such Claim. Contractor shall reimburse Indemnitees for any and all legal expenses and costs incurred by each of them in connection therewith or in enforcing the indemnity herein provided. Contractor's obligation to indemnify shall not be restricted to insurance proceeds, if any, received by Contractor or Indemnitees. This indemnity shall apply to all Claims regardless of whether any insurance policies are applicable or whether the Claim was caused in part or contributed to by an Indemnitees.

2. **Civil Code Exception**. Nothing in this Section 6(H) shall be construed to encompass Indemnitees' sole negligence or willful misconduct to the limited extent that the underlying Contract is subject to Civil Code Section 2782(a) or the City's active negligence to the limited extent that the underlying Contract is subject to Civil Code Section 2782(b), provided such sole negligence, willful misconduct or active negligence is determined by agreement between the parties or by the findings of a court of competent jurisdiction.

3. **Nonwaiver of Rights**. Indemnitees do not and shall not waive any rights that they may possess against Contractor because the acceptance by City or the deposit with City of any insurance policy or certificate required pursuant to this Contract. This indemnity provision is effective regardless of any prior, concurrent, or subsequent active or passive negligence by Indemnitees.

4. **Waiver of Right of Subrogation**. Contractor, on behalf of itself and all parties claiming under or through it, hereby waives all rights of subrogation and contribution against the Indemnitees while acting within the scope of their duties from all Claims arising out of or incident to the activities or operations performed by or on behalf of the Contractor, or lack or omission thereof, regardless of any prior, concurrent or subsequent active or passive negligence by Indemnitees.

5. **Survival**. The provisions of this Section 6(H) shall survive the term and termination of the Contract, are intended to be as broad and inclusive as is permitted by the law of the State, and are in addition to any other rights or remedies that Indemnitees may have under the law. Payment is not required as a condition precedent to an Indemnitee's right to recover under this indemnity provision, and an entry of judgment against a Contractor shall be conclusive in favor of the Indemnitee's right to recover under this indemnity provision.

I. **Dispute Resolution Meetings**. In the event of any damage or injury caused by Contractor or its subcontractors in the performance of the Contract, the Contractor shall attend dispute resolution meetings with the City and interested parties as required by the City.

J. **Resolution of Claims and Disputes.** Public Contract Code Sections 20104 *et seq.* apply to this Contract and are incorporated herein by this reference. In any arbitration to resolve a dispute relating to or arising out of this Contract, the arbitrator's award shall be supported by law and substantial evidence. The arbitrator shall file a written decision with the court and serve a copy of it on each of the parties. The written decision shall contain a summary of the evidence, reasons underlying the decision, and unless the parties otherwise agree, findings of fact and conclusions of law.

K. **Assignment of Unfair Business Practices.** In entering into this Contract, the Contractor offers and agrees to assign to the City all rights, title, and interest in and to all causes of action it may have under Section 4 of the Clayton Act (15 U.S.C. Sec. 15) or under the Cartwright Act (Chapter 2 (commencing with Section 16700) of Part 2 of Division 7 of the Business and Professions Code), arising from purchases of goods, services, or materials pursuant to this Contract. This assignment shall be made and become effective at the time the City tenders final payment to the Contractor, without further acknowledgment by the parties. Contractor shall include this provision in its contracts with all subcontractors such that they offer and agree to assign to the City all rights, title, and interest in and to all causes of action they may have under Section 4 of the Clayton Act (15 U.S.C. Sec. 15) or under the Cartwright Act (Chapter 2 (commencing with Section 16700) of Part 2 of Division 7 of the Business and Professions Code), arising from purchases of goods, services, or materials pursuant to their subcontracts.

Section 7. PROSECUTION AND PROGRESS OF THE WORK

A. **Subletting and Assignment**. The Contractor shall give personal attention to the fulfillment of this Contract and shall be in control of the work. The Contractor shall not assign, transfer nor sublet any part of the Work, nor shall the Contract be assigned, transferred, or sublet, in whole or in part, without the written consent of the City by the City Engineer and of all sureties of the Contractor's bonds. Such consent of the sureties, together with a copy of the subcontract, shall be filed with the City Engineer prior to his or her consent. Any assignment, transfer or subletting of the Contract in violation of this Subsection is null and void. No assignment, transfer or subletting, even though consented to, shall relieve the Contractor of liability under the Contract. This provision shall govern over Section 2-2 in the Standard Specifications.

B. **Subcontractors**. All persons engaged in the Work, including all subcontractors and their employees will be considered as employees of the Contractor, their work being subject to the provisions of the Contract and the specifications. Should any subcontractor fail to perform work to the satisfaction of the City Engineer, said subcontractor shall be removed immediately from the Work upon request by the City Engineer and shall not again be employed on the Work, and the Contractor shall be held liable for the deficient work. The Contractor shall list in Appendix H, which is attached hereto and incorporated herein by this reference, the names, California contractor license numbers, addresses, telephone numbers, types of work and percentages of the total Work of all subcontractors.

C. **Temporary Stoppage of Construction Activities.** In addition to the City Engineer's authority to suspend the Work for other reasons, the City Engineer shall have the authority to

issue an order suspending the Work wholly or in part for such a period of time as he may deem necessary due to unsuitable weather, such other conditions as he considers unfavorable for the proper prosecution of the work, or failure on the part of the Contractor to carry out orders or to perform any of the requirements of this Contract. The Contractor shall immediately comply with such an order from the City Engineer and shall not resume operations until so ordered in writing.

Section 8. CONTROL OF THE WORK.

A. **Authority of the City Engineer**. In addition to the City Engineer's responsibilities listed in Standard Specifications Section 2-10, the City Engineer shall decide any and all questions that may arise as to the quality and acceptability of materials furnished and work performed, as to the manner of performance and rate of progress of the Work, and any and all questions which may arise as to the interpretation of the plans and specifications. The City Engineer shall likewise decide any and all questions as to the acceptable fulfillment of the Contract on the part of the Contractor, and all questions as to claims and compensations. The decision of the City Engineer shall be final, and he shall have relative authority to enforce and make effective such decisions and actions as the Contractor fails to carry out promptly. Due to the nature of the Contract, any changes to the Work required by City must be approved by Contractor's energy engineers. If the change adversely affects savings, Contractor and City shall meet to agree in writing on the changes and any adjustments to the Savings Guarantee as defined in the Climatic Measurement and Verification Agreement with the City of Beverly Hill.

B. **Protection of the Work**. In addition to Standard Specifications Section 4-1.2, the Contractor shall continuously maintain adequate protection of the Work from damage, and the City will not be held responsible for the care or protection of any material, equipment, or parts of the Work, except as expressly provided for in the specifications.

C. **Access to Residents' Driveways**. In addition to Standard Specifications Section 7-10.1.1.1, sufficiently in advance of construction, the Contractor shall notify residents of property adjoining the location of the Work as of the date when such construction work will start. In case of work requiring excavation of the roadway which may interfere with the use by residents of their driveways, suitable provisions shall be made by the Contractor to make it possible for residents to gain access to their driveways until such time as the exigencies of construction may demand a temporary blocking of said driveways. Efforts shall be made by the Contractor to minimize the duration of said blocking and to notify the residents of this need well in advance, thus allowing them to make suitable arrangements to keep their automobiles elsewhere.

D. **Removal of Interfering Obstructions**. The Contractor shall remove and dispose of all debris, abandoned structures, tree roots, and obstructions of any character met during the process of excavation.

E. **Avoidance of Patchwork Appearance**. New PCC work shall conform in grade, finish and color to the adjoining portions. Any sections of said work having a patchwork appearance will be rejected by the City Engineer, and the Contractor shall replace them at the Contractor's expense. To insure a neat break line between existing and new portions of PCC work, the Contractor will be required to use a concrete cutting saw of a type approved by the City Engineer. Likewise, whenever adjoining PCC work is damaged during the process of new

construction, the damaged portions shall be removed in such a way that a neat, straight joint is provided between the new portions and existing work.

F. **Care of Gutters Adjacent To Areas to Be Paved**. During the process of resurfacing the roadways or construction of new pavement, the Contractor shall exercise particular care to remove all excess resurfacing material which may be deposited upon the PCC gutters. Whenever specifications call for the resurfacing material to overlap the existing gutters, the overlapping portions shall not exceed the dimensions shown on the plans and a wavy overlapping line shall be avoided. Any undulation of the overlapping line accidentally resulting from the application of the paving or resurfacing material shall be corrected by the Contractor before the work is accepted by the City Engineer.

G. **Depth of the Required Excavation**. When the Work requires excavation and removal of existing pavement and excess of underlying soil, these materials shall be removed to the depth specified by the City Engineer. Whenever the subgrade exposed after the removal of the excess underlying soil is found to be of the desirable kind, excavation need not proceed below the depth specified by the City Engineer. However, if the excavation discloses the fact that there is mud or any other soft material in the subgrade, said material shall be removed to a minimum depth of six inches (6"), at the discretion of the City Engineer. Backfill of the additional excavated portions shall be made with select material removed from other portions of the Work, provided said material is found suitable by the City Engineer. The volume in place of the additional soil excavation will be determined by the field representatives of the City Engineer, and the Contractor will be entitled in this case to extra payment in an amount agreed upon in advance by the Contractor and the City Engineer based on the additional number of cubic yards excavated. Should imported material be required for the backfill, the unit cost per cubic yard of said imported material shall be agreed in advance, in writing, between the Contractor and the City Engineer, and extra payment for said material will be made to the Contractor for the actual volume used, as verified in the field by representatives of the City Engineer.

H. **Sequence of the Work of Excavation**. Whenever the Work calls for excavation of existing pavement and excess soil and for construction of base material, the process of excavation shall be conducted by the Contractor so that, at the end of any working day, the area where excavation is proceeding shall not be more than three hundred feet (300') in advance of the area where the untreated rock base over sections already excavated is being laid, unless otherwise indicated in the specifications.

I. **Maintenance of Traffic and Safety Requirement**. If Contractor must perform work in a street right-of-way, Contractor shall conduct operations so as to cause the least possible obstruction and inconvenience to public traffic and safety, and Contractor shall take all necessary measures to maintain an adequate traffic flow, to prevent accidents, to protect the site of the Work and to keep streets open and in passable condition for emergency vehicles at all times. During construction the Contractor shall, as far as practicable, keep the Work area free of rubbish and debris and in as clean a condition as possible.

A suitable width of any intersecting street shall be kept in reasonably good condition for traffic, including the necessary provisions for proper drainage. Should the requirements of construction

demand closing the full width of an intersection, such closing shall be allowed only after the Contractor has secured permission from the City Engineer and the duration of the closing must be for the minimum length of time possible. After said permission is granted, the Contractor shall make the necessary arrangements to provide temporary crossings, or to reroute traffic away from said intersection and provide and maintain barriers, guards, directional signs, watchpersons, and lights at all detour points, in order to give adequate warning to the public at all times that the streets are under construction and of the dangerous conditions as a result thereof. The Contractor shall also erect and maintain such additional warning and directional signs as may be furnished by the City.

J. **Barriers, Lights, Etc**. The above-mentioned barriers, safety lights, warning and regulatory signs, guards, temporary crossovers, and watchpersons shall also be provided and maintained by the Contractor at the Contractor's expense over all portions of the Work during construction and until acceptance of the Work. Provisions shall be made by the Contractor to insure operation of the safety lights throughout the evenings without interruption. No safety lights using inflammable liquids shall be permitted during the progress of the Work, and only electric battery operated safety lamps will be approved for this purpose.

K. **Removal of Defective or Unauthorized Work**. It is the intent of the specifications that only first class work, materials, and workmanship will be acceptable. All work which is defective in its construction or deficient in any of the requirements of the specifications shall be remedied, or removed and replaced by the Contractor in an acceptable manner, and no compensation will be allowed for such correction. Any work done beyond the lines shown on the plans or established by the City Engineer or any extra work done without written authority will be considered as unauthorized and will not be paid for. Upon failure on the part of the Contractor to comply forthwith with any order of the City Engineer made under the provisions of this paragraph, the City Engineer shall have authority to cause defective work to be remedied or removed and replaced and unauthorized work to be removed, and to deduct the costs thereof from any monies due or to become due the Contractor. If the Work is found to be in compliance with this Contract and the specifications, the City Engineer will furnish the Contractor with a certificate to that effect.

L. **Supervision**. All manufactured products, materials, and appliances used and installed and all details of the work done shall at all times be subject to the supervision, test, and approval of the City Engineer or his authorized representatives. The City Engineer or his authorized representatives shall have access to the work at all times during construction, and shall be furnished with every reasonable facility for securing full knowledge with regard to the progress, workmanship and character of the materials used or employed in the Work.

M. **Inspectors**. All Contractor work must be approved by inspectors appointed by the City Engineer. If inspectors are required on site in order to properly inspect work as determined by City, the Contractor shall make a written application for an inspector at least twenty-four (24) hours before his services are required on the work. All instructions given to the Contractor by such inspectors shall be regarded as having been given directly by the City Engineer. Contractor's work is often done outside of normal construction hours and in areas that are occupied during the day so Contractor will try to minimize interference with the normal activity in the area. Whenever the cost of an improvement or the cost of any portion thereof is defrayed

from the Gas Tax Funds allocated to the City by the County of Los Angeles, or by the State of California, inspectors appointed by the State or County shall likewise be given full access to the site of the work in order that they may perform their inspection duties efficiently and without interference. The inspection of the Work shall not relieve the Contractor of any of his obligations to fulfill the Contract as prescribed. Defective work shall be made good and unsuitable materials rejected, notwithstanding the fact that such defective work and unsuitable materials may have been previously overlooked by the inspectors and accepted or estimated for payment.

N. **Final Cleaning Up**. Upon completion of the Work and before making application to the City Engineer for acceptance of the Work, the Contractor shall clean all the streets and grounds occupied by him in connection with the Work of all rubbish, debris, excess material, temporary structures and equipment, leaving the entire site of the Work in a neat, presentable condition.

O. **Loss or Damage**. Any loss or damage arising from any omission or act of the Contractor or any of his subcontractors, employees or agents or by any action which had not been authorized in the provisions of the specifications shall be sustained by the Contractor.

Section 9. SAFETY AND PROTECTION OF WORKERS.

Pursuant to Public Contract Code Section 7104, if any work under this Contract involves digging trenches or other excavations that extend deeper than four feet (4') below the surface, the Contractor shall promptly, and before the following conditions are disturbed, notify City in writing of any: material that the Contractor believes may be material that is hazardous waste, as defined in Section 25117 of the Health and Safety Code, that is required to be removed to a Class I, Class II, or Class III disposal site in accordance with provisions of existing law; subsurface or latent physical conditions at the site differing from those indicated; or unknown physical conditions at the site of any unusual nature, different materially from those ordinarily encountered and generally recognized as inherent in the work of the character provided for in the Contract. The City shall promptly investigate the conditions, and if it finds that the conditions do materially so differ or do involve hazardous waste and cause a decrease or increase in the Contractor's cost of or the time required for performance of any part of the Work, the City shall issue a change order under the procedures described in the Contract. In the event that a dispute arises between the City and the Contractor whether the conditions materially differ, involve hazardous waste, or cause a decrease or increase in the Contractor's cost of or time required for performance of any part of the Work, the Contractor shall not be excused from any scheduled completion date provided for by the Contract, but shall proceed with all work to be performed under the Contract. The Contractor shall retain any and all rights provided either by Contract or by law which pertain to the resolution of disputes and protests between the contracting parties.

Section 10. MISCELLANEOUS.

A. **Severability**. Whenever possible, each covenant, condition, restriction, or provision of this Contract shall be interpreted in such a manner as to be valid under applicable law. If any covenant, condition, restriction, or provision of this Contract or application thereof to any person or entity is determined by a court of competent jurisdiction to be invalid, void or unenforceable,

such judgment or court order shall in no way affect any of the other covenants, conditions, restrictions, or provisions hereof or the application thereof to any other person or entity, and the same shall remain in full force and effect.

B. **Audit**. The City or its representative shall have the option of inspecting, auditing, or inspecting and auditing all records and other written materials used by Contractor in preparing its billings to the City as a condition precedent to any payment to Contractor. Contractor shall promptly furnish documents requested by the City. Additionally, Contractor shall be subject to State Auditor examination and audit at the request of the City or as part of any audit of the City, for a period of three (3) years after final payment under this Contract.

C. **Notice**. Any notice, request, direction, demand, consent, waiver, approval or other communication required or permitted to be given hereunder shall not be effective unless it is given in writing and shall be delivered (1) in person, (2) by certified mail, postage prepaid, return receipt requested, (3) by facsimile, or (4) by a commercial overnight courier that guarantees next day delivery and provides a receipt. Such communication must be addressed to the parties at the addresses stated on the Cover Page of this Contract or at such other address as either Party may hereafter notify the other in writing as aforementioned.

Service of any such notice or other communications shall be deemed effective on the day of actual delivery, whether accepted or refused.

D. **Entire Contract**. This Contract including all attachments and appendices represents the entire integrated agreement between City and Contractor and supersedes all prior negotiations, representations or agreements, either written or oral. This Contract may be amended only by a written instrument signed by both City and Contractor.

E. **Interpretation of Contract Documents.** If there is any conflict between any of the Contract documents, the document highest in the order of precedence shall control, except that, in each case, where provisions of more than one Agreement Document address the same subject, the most stringent provisions shall prevail. The order of precedence, from highest to lowest, shall be as follows:

a) This Contract
b) Appendix A, and C through I to this Contract
c) Appendix B to this Contract (including Attachments)

F. **Governing Law**. This Contract shall in all respects be interpreted, enforced and governed by and under the laws of the State of California applicable to instruments, persons, transactions and subject matter which have legal contacts and relationships solely within the County of Los Angeles, State of California. Venue and jurisdiction with respect to any action, claim or other proceeding arising under or in relation to this Contract shall be exclusively in the State courts located within the County of Los Angeles, State of California.

G. **Waiver**. The waiver of any provision of this Contract must be in writing and signed by the party providing such waiver. The waiver of a breach of any provision of this Contract shall not be deemed to be a waiver of such provision or any subsequent breach of the same or any other provision of this Contract. Acceptance of performance after the due date of such

performance shall not be deemed to be a waiver of any preceding breach of any provision of this Contract, regardless of the accepting Party's knowledge of such preceding breach at the time of acceptance of such performance.

H. **Headings**. All Section headings and subheadings are inserted for convenience only and shall have no effect on the construction or interpretation of this Contract.

I. **Third-Party Claims**. The City shall have full authority to compromise or otherwise settle any claim relating to the Work at any time. The City shall timely notify the Contractor of the receipt of any third-party claim relating to the Work. City shall be entitled to recover its reasonable costs incurred in providing this notice.

J. **Contractor's Representations**. By signing the Contract, Contractor represents, covenants and agrees that: a) Contractor is licensed, qualified, and capable of furnishing the labor, materials, and expertise necessary to perform the services in accordance with the terms and conditions set forth in the Contract; b) there are no obligations, commitments, or impediments of any kind that will limit or prevent Contractor's full performance under the Contract; c) there is no litigation pending against Contractor, and Contractor is not the subject of any criminal investigation or proceeding; and d) to Contractor's actual knowledge, neither Contractor nor its personnel have been convicted of a felony.

K. **Conflicts of Interest**. Contractor agrees not to accept any employment or representation during the term of the Contract or within twelve (12) months after acceptance that is or may likely make Contractor "financially interested," as provided in Government Code Section 1090 and 87100, in any decisions made by City on any matter in connection with which Contractor has been retained pursuant to the Contract.

L. **Independent Contractor**. Contractor is and shall at all times remain, as to the City, a wholly independent contractor. Neither the City nor any of its employees or agents shall have control over the conduct of Contractor or any of the Contractor's employees, except as herein set forth, and Contractor is free to dispose of all portions of its time and activities which it is not obligated to devote to the City in such a manner and to such persons, firms, or corporations at the Contractor wishes except as expressly provided in this Contract. Contractor shall have no power to incur any debt, obligation, or liability on behalf of the City, bind the City in any manner, or otherwise act on behalf of the City as an agent. Contractor shall not, at any time or in any manner, represent that it or any of its agents, servants or employees are in any manner agents, servants or employees of City. Contractor agrees to pay all required taxes on amounts paid to Contractor under this Contract, and to indemnify and hold the City harmless from any and all taxes, assessments, penalties, and interest asserted against the City by reason of the independent contractor relationship created by this Contract. The City shall have the right to offset against the amount of any compensation due to Contractor under this Contract any amount due to the City from Contractor as a result of its failure to promptly pay to the City any reimbursement or indemnification arising under this Section.

M. **Construction**. In the event of any asserted ambiguity in, or dispute regarding the interpretation of any matter herein, the interpretation of this Contract or any incorporated documents shall not be resolved by any rules of interpretation providing for interpretation against

the party who causes the uncertainty to exist or against the party who drafted the entirety or a portion of the Contract or incorporated document.

IN WITNESS WHEREOF, the parties hereto have executed this instrument the day and year first above written.

CITY OF BEVERLY HILLS,
A Municipal Corporation

_____
JULIAN A. GOLD, M.D.
Mayor of the City of Beverly Hills, California

ATTEST:

_____ (SEAL)
BYRON POPE
City Clerk

CONTRACTOR: CLIMATEC, LLC

_____
STEVE SIVERSON
Vice President - Energy Services

_____
BOB MONAGHAN
Chief Financial Officer

APPROVED AS TO FORM:

_____
LAURENCE S. WIENER
City Attorney

APPROVED AS TO CONTENT:

_____
MAHDI ALUZRI
Interim City Manager

_____
GEORGE CHAVEZ
Director of Public Works Services

_____
CHAD LYNN
Assstant Director of Public Works Services

KARL KIRKMAN
Risk Manager

APPENDIX A

PAYMENT PROCEDURES AND PRICE BREAKDOWN

A. PAYMENT PROCEDURES

1.0 PROGRESS PAYMENTS

1.1 Based upon Applications for Payment submitted to the City, the City shall make progress payments on account of the Contract Amount as set forth on the Cover Page of the Contract to the Contractor as provided below.

1.2 City shall make payment to the Contractor within thirty (30) days after receipt of a proper Application for Payment.

1.3 Each Application for Payment shall be based upon the approved Schedule of Values submitted by the Contractor. The Schedule of Values shall allocate the entire Contract Amount among the various portions of the Work and be prepared in such form and supported by such data to substantiate its accuracy as may be required.

1.4 Applications for Payment shall indicate the percentage of completion of each portion of the Work as of the end of the period covered by the Application for payment.

1.5 The amount of each progress payment shall be computed as follows:

1.5.1 Take that portion of the Contract Amount properly allocable to completed and satisfactory work as determined by multiplying the percentage completion of each portion of the work by the share of the total Contract Amount allocated to that portion of the work in the Schedule of Values, less a retention of five percent (5%).

1.5.2 Add that portion of the Contract Amount properly allocable to materials and equipment delivered and suitably stored at the site for subsequent incorporation in the completed construction (or, if approved in advance by the City, suitably stored off the site at a location agreed upon in writing), less a retention of five percent (5%).

1.5.3 Subtract the aggregate of previous payments made by the City.

1.6 Pursuant to Section 22300 of the Public Contract Code, at the request and expense of the Contractor, securities equivalent to the retention amount withheld may be deposited with the City or with a state or federally chartered bank as the escrow agent, and City shall then pay such moneys to the Contractor. Alternatively, the Contractor may request and the City shall make payment of retentions earned directly to the escrow agent at the expense of the Contractor. If Contractor elects one of these options, Contractor shall execute an escrow agreement in a form approved by the City Attorney.

1.7 Reduction or limitation of retention, if any, shall be upon written request by the Contractor. The City, at its discretion, may reduce the total retention withheld or release retention for a specific item of work in accordance with the law.

2.0 FINAL PAYMENT

2.1 The final payment, constituting the entire unpaid balance of the Contract Amount, including the retention, shall be made by the City to the Contractor when (1) the Contract has been fully performed by the Contractor except for the Contractor's responsibility to correct nonconforming work as agreed to between the City and the Contractor; and (2) a final Certificate for Payment has been submitted by the Contractor and approved by the City; and (3) the Work has been accepted by the City Council of the City of Beverly Hills; and (4) a Notice of Completion has been filed. Final payment shall be made by the City not more than forty (40) days after completion of the above, but only to the extent that no stop payment notices or other requirements to withhold funds are then in effect.

B. PRICE BREAKDOWN

City shall compensate Contractor for the services required by this Agreement as described in Attachment 1 to this Appendix.

ATTACHMENT 1 TO APPENDIX A

City of Beverly Hills

	Fire Dept. HQ	Fire Station #2	Library	Police Dept.	Public Works Facility	Bedford Parking Structure	Beverly Dr. North Parking Structure	Camden Parking Structure	Crescent North Parking Structure	Crescent South Parking Structure	La Cienega Parking Structure	Montagal Gardens Parking Structure	Santa Monica B'a Parking Structure	Third St. Parking Structure	Beverly Gardens Park	Coldwater Canyon Park	La Cienega Park	Maltz Park	Will Rogers Park	Misc Parks & Medians	TOTAL
Mechanical Upgrades	$ -	$ -	$ -	$ -	$ -	$ 30,360	$ 25,912	$ -	$ 23,958	$ 42,042	$ 66,321	$ -	$ -	$ -	$ -	$ -	$ -	$ -	$ -	$ -	$188,593
Controls/kW Demand Management	$ -	$ -	$ 50,690	$ 168,055	$ 200,020	$ -	$ -	$ -	$ -	$ -	$ -	$ -	$ -	$ -	$ -	$ -	$ -	$ -	$ -	$ -	$418,765
Lighting Upgrades	$ 30,807	$ 11,875	$ -	$ 85,550	$ 60,247	$ -	$ -	$ 13,003	$ 213,434	$ 199,131	$ -	$ 210,004	$ 75,291	$ -	$ 13,498	$ 1,616	$ 12,112	$ 1,084	$ 23,370	$ -	$951,020
Irrigation Upgrades	$ -	$ -	$ -	$ -	$ -	$ -	$ -	$ -	$ -	$ -	$ -	$ -	$ -	$ -	$ -	$ -	$ -	$ -	$ -	$ 362,757	$362,757
Project Development	$ 2,465	$ 1,187	$ 5,089	$ 25,361	$ 26,027	$ 2,429	$ 2,073	$ 1,040	$ 18,991	$ 19,294	$ 6,475	$ 16,800	$ 6,023	$ -	$ 1,080	$ 129	$ 969	$ 87	$ 1,870	$ 29,021	$186,389
APME Engineering	$ -	$ -	$ -	$ -	$ -	$ 3,643	$ 3,109	$ -	$ 2,875	$ 5,045	$ 7,770	$ -	$ -	$ -	$ -	$ -	$ -	$ -	$ -	$ -	$22,445
Project Management	$ 3,081	$ 1,662	$ 7,097	$ 35,505	$ 36,437	$ 3,036	$ 2,501	$ 1,300	$ 23,739	$ 24,117	$ 9,065	$ 21,000	$ 7,529	$ -	$ 1,350	$ 162	$ 1,211	$ 106	$ 2,337	$ 36,276	$217,604
SITE SUBTOTALS	$ 36,352	$ 14,724	$ 62,876	$ 314,471	$ 322,731	$ 39,468	$ 33,595	$ 15,344	$ 282,998	$ 289,629	$ 89,631	$ 247,805	$ 88,843	$ -	$ 15,928	$ 1,907	$ 14,292	$ 1,279	$ 27,576	$ 428,053	$2,327,570

0	
Site Subtotal	$2,327,570
General Conditions	$113,014
Overhead Expense	$293,090
Gross Profit	$195,393
Project Total*	$2,929,068

Performance Bond	$50,790

*Excludes Bond

APPENDIX B**

CONTRACTOR SCOPE OF WORK

For purposes of this Appendix, Climatec, LLC, shall mean "Contractor" and Purchaser shall mean "City".

1. **INSTALLATION.** Climatec, LLC shall provide Purchaser with an Energy Efficiency Program, as identified in Attachment 1 to this Appendix B and incorporated herein by reference (hereinafter referred to as the "Work") at the total fixed price of $2,979,858 plus a contingency of $297,985, including required taxes and Performance Bond (if requested) (the "Contract Amount").

   Climatec, LLC is responsible for the design, engineering, permits, fees, approvals, project management, installation, startup, training, checkout, warranty, and insurance specifically associated with the Work to be performed. Climatec, LLC is not responsible for any equipment, systems, controls, comfort problems, balancing, duct cleaning, existing deficient conditions, etc. not specifically included in this Contract. Climatec, LLC shall provide submittals and engineered drawings (if required), for Purchaser's technical review and written approval, prior to initiating construction. All construction and associated cleanup shall be performed and scheduled so as to minimize any disruption with any ongoing Purchaser activities. Climatec, LLC requires all underground conduits between buildings to be clear of obstruction, of sufficient size to accommodate new wire and cable, and easily accessible. The Purchaser is responsible for Ethernet drops at each location for Energy Management System communication.

2. **SCOPE OF WORK.** Once this Contract is executed by the Purchaser and Climatec, LLC, Climatec, LLC may not revise the Contract in any way except by mutual written agreement with the Purchaser.

   This Contract is based upon the use of straight time labor only unless stated otherwise in this Contract. Purchaser agrees to provide Climatec, LLC with required field utilities (electricity, toilets, drinking water, etc.) without charge. Climatec, LLC agrees to keep the jobsite clean of debris arising out of its own operations. Purchaser shall not back charge Climatec, LLC for any cost or expenses without Climatec, LLC's written consent. Unless specifically noted in the statement of the scope of the work or services undertaken by Climatec, LLC under this Contract, Climatec, LLC's obligations under this Contract expressly exclude any work or service of any nature associated or connected with the identification, abatement, clean up, control, removal or disposal of environment Hazards or dangerous substances, to include but not to be limited to asbestos, PCBs, or mold discovered in or on the premises. Any language or provision of the Contract contained which may authorize or empower the Purchaser to change, modify or alter the scope of work or services to be performed by Climatec, LLC shall not operate to compel Climatec, LLC to perform any work relating to Hazards without Climatec, LLC's express written consent.

3. **WARRANTY.** Climatec, LLC warrants that the equipment and systems provided under this Contract shall be free from defects in material and workmanship arising from normal usage for a period of one year from the date of beneficial use or eighteen months from delivery of said equipment or systems. Within the warranty period, if Purchaser provides written notice to Climatec, LLC of any such defects within thirty (30) days after the appearance or discovery of such defect, Climatec, LLC shall, at its option, repair or replace the defective equipment and return said equipment to Purchaser. All transportation charges incurred in connection with the warranty for equipment shall be borne by Purchaser, unless otherwise provided for in manufacturer warranties. These warranties do not extend to any equipment which has been repaired by others, abused, altered or misused, or which has not been properly and reasonably maintained. All transferrable manufacturer warranties associated with the equipment will be transferred to the Purchaser. These warranties are in lieu of all other warranties, expressed or implied, including but not limited to those of merchantability and fitness for a specific purpose.

4. **REBATES, UTILITY INCENTIVES, AND GRANTS** Unless otherwise stated in the project scope-of-work, or cash flow analysis, any and all rebates, incentives, grants that are earned through the course of this project from public or private utilities, municipalities, development districts or state funding are 100% the property of Climatec, LLC or their designee. The paperwork, inspections and verification required to collect these monies are the sole responsibility of Climatec, LLC. The Purchaser agrees to assist Climatec, LLC where required by the jurisdiction in the form of data required for the application and authorizing signatures. In the event the Purchaser incurs expenses related to the processing of the applications, Climatec, LLC shall reimburse these direct costs.

5. **TAX CREDITS, TAX DEDUCTIONS AND 179d QUALIFYING CREDITS** Unless otherwise stated in the contract, any and all eligible tax credits or incentives that can be earned through the course of this project from State, Local or Federal agencies for energy efficient design are 100% the property of Climatec, LLC or their designee. The paperwork, inspections and verification required to collect these credits are the sole responsibility of Climatec, LLC. The Purchaser agrees to assist Climatec, LLC where required by the jurisdiction in the form of data required for the application and authorizing signatures and/or transfers. In the event the Purchaser incurs expenses related to the processing of the applications, Climatec, LLC shall reimburse these direct costs.

6. **DESCRIPTION OF SCOPE BY SITE**

a. **STREET LIGHTING.**

1. **<u>City Wide</u>**
Design / Engineering / Testing

Perform engineering analysis to retrofit existing city owned standard efficiency high-intensity discharge (HID) street pole lighting fixtures with new LED fixtures to ensure project feasibility. Retrofit a test sample of existing city owned standard efficiency HID street pole lighting fixtures with new proposed LED fixtures to ensure both the aesthetics and performance meet City expectations.

b. **Facilities**

1. **<u>Civic Center Central Plant</u>**
   Chilled Water Storage Tank
   Drain the chilled water (CHW) storage tank and evaluate the existing conditions to determine the source of the leak. Findings will be compiled into a report and presented to the City to determine further action.

2. **<u>Fire Department Headquarters</u>**
   Lighting
   Retrofit existing standard efficiency T8 fluorescent lighting systems with new high efficiency LED lighting systems which will provide exceptional light quality, long life and instant start capability. Refer to the lighting inventory for specific locations and applications.

   Replace existing exterior building and/or pole mounted HID lighting systems with high efficiency LED lighting systems that provide exceptional light quality, long life and instant start capability. Refer to the lighting inventory for specific locations and applications.

3. **<u>Fire Station #2</u>**
   Lighting
   Retrofit existing standard efficiency T8 fluorescent lighting systems with new high efficiency LED lighting systems which will provide exceptional light quality, long life and instant start capability. Refer to the lighting inventory for specific locations and applications.

   Replace existing exterior building and/or pole mounted HID lighting systems with high efficiency LED lighting systems that provide exceptional light quality, long life and instant start capability. Refer to the lighting inventory for specific locations and applications.

   Install fixture mounted occupancy sensors on appropriate lighting fixtures to automatically dim lighting levels during periods of inactivity. The system will automatically return to full brightness when movement is sensed in the area. Refer to the lighting inventory for specific locations and applications.

4. **<u>Library</u>**
   Other
   Install an Electric Battery Storage system capable of providing electrical power storage for peak demand reduction and off-peak charging to maximize utility bill savings. Scope includes installation of battery equipment and control system, connection to existing electrical infrastructure, necessary equipment pads and start-up/testing of equipment and controls.

5. **Police Department**

Controls

Replace areas with existing pneumatic controls with a new Building Automation System (BAS) and integrate into the site's current BAS system. The new BAS will be a non-proprietary, networked energy management system tied to the heating/cooling units that will provide substantial temperature control improvements and ease of schedule changes. During occupied periods, heating and cooling set points will be maintained with the user able to change set points within a preprogrammed amount. Along with providing the facility with additional scheduling and monitoring capabilities, this energy conservation measure will also generate substantial energy savings, reduce M&O expenditures and improve occupant comfort.

Lighting

Retrofit existing standard efficiency T8 fluorescent lighting systems with new high efficiency LED lighting systems which will provide exceptional light quality, long life and instant start capability. Refer to the lighting inventory for specific locations and applications.

Retrofit existing interior HID lighting systems with new high efficiency LED lighting systems which will provide exceptional light quality, long life and instant start capability. Refer to the lighting inventory for specific locations and applications.

Replace existing exterior building and/or pole mounted HID lighting systems with high efficiency LED lighting systems that provide exceptional light quality, long life and instant start capability. Refer to the lighting inventory for specific locations and applications.

Install fixture mounted occupancy sensors on appropriate exterior building and/or pole mounted lighting fixtures to automatically dim lighting levels during periods of inactivity. The system will automatically return to full brightness when movement is sensed in the area. Refer to the lighting inventory for specific locations and applications.

6. **Other**

Install an Electric Battery Storage system capable of providing electrical power storage for peak demand reduction and off-peak charging to maximize utility bill savings. Scope includes installation of battery equipment and control system, connection to existing electrical infrastructure, necessary equipment pads and start-up/testing of equipment and controls.

7. **Public Works Facility**

Lighting

Retrofit existing interior HID lighting systems with new high efficiency LED lighting systems which will provide exceptional light quality, long life and instant

start capability. Refer to the lighting inventory for specific locations and applications.

Replace existing exterior building and/or pole mounted HID lighting systems with high efficiency LED lighting systems that provide exceptional light quality, long life and instant start capability. Refer to the lighting inventory for specific locations and applications.

Other
Install an Electric Battery Storage system capable of providing electrical power storage for peak demand reduction and off-peak charging to maximize utility bill savings. Scope includes installation of battery equipment and control system, connection to existing electrical infrastructure, necessary equipment pads and start-up/testing of equipment and controls.

c. **PARKING STRUCTURES**

1. **Bedford Parking Structure**
HVAC
Install a new Carbon Monoxide (CO) monitoring and control system. The CO System will continuously measure the carbon monoxide levels in the parking structure and will activate the existing exhaust fans when the CO level reaches the required threshold levels. Scope will include installation and start-up of the new system.

2. **Beverly Dr North Parking Structure**
HVAC
Install a new Carbon Monoxide (CO) monitoring and control system. The CO System will continuously measure the carbon monoxide levels in the parking structure and will activate the existing exhaust fans when the CO level reaches the required threshold levels. Scope will include installation and start-up of the new system.

3. **Camden Parking Structure**
Lighting
Retrofit existing standard efficiency T8 fluorescent lighting systems with new high efficiency LED lighting systems which will provide exceptional light quality, long life and instant start capability. Refer to the lighting inventory for specific locations and applications.

Retrofit existing interior HID lighting systems with new high efficiency LED lighting systems which will provide exceptional light quality, long life and instant start capability. Refer to the lighting inventory for specific locations and applications.

Replace existing exterior building and/or pole mounted HID lighting systems with high efficiency LED lighting systems that provide exceptional light quality, long

life and instant start capability. Refer to the lighting inventory for specific locations and applications.

Install fixture mounted occupancy sensors on appropriate lighting fixtures to automatically dim lighting levels during periods of inactivity. The system will automatically return to full brightness when movement is sensed in the area. Refer to the lighting inventory for specific locations and applications.

4. **Crescent North Parking Structure**

HVAC

Install a new Carbon Monoxide (CO) monitoring and control system. The CO System will continuously measure the carbon monoxide levels in the parking structure and will activate the existing exhaust fans when the CO level reaches the required threshold levels. Scope will include installation and start-up of the new system.

Lighting

Retrofit existing standard efficiency T8 fluorescent lighting systems with new high efficiency LED lighting systems which will provide exceptional light quality, long life and instant start capability. Refer to the lighting inventory for specific locations and applications.

Replace existing exterior building and/or pole mounted HID lighting systems with high efficiency LED lighting systems that provide exceptional light quality, long life and instant start capability. Refer to the lighting inventory for specific locations and applications.

Install fixture mounted occupancy sensors on appropriate lighting fixtures to automatically dim lighting levels during periods of inactivity. The system will automatically return to full brightness when movement is sensed in the area. Refer to the lighting inventory for specific locations and applications.

5. **Crescent South Parking Structure**

HVAC

Install a new Carbon Monoxide (CO) monitoring and control system. The CO System will continuously measure the carbon monoxide levels in the parking structure and will activate the existing exhaust fans when the CO level reaches the required threshold levels. Scope will include installation and start-up of the new system.

Lighting

Retrofit existing standard efficiency T8 fluorescent lighting systems with new high efficiency LED lighting systems which will provide exceptional light quality, long life and instant start capability. Refer to the lighting inventory for specific locations and applications.

Install fixture mounted occupancy sensors on appropriate lighting fixtures to automatically dim lighting levels during periods of inactivity. The system will

automatically return to full brightness when movement is sensed in the area. Refer to the lighting inventory for specific locations and applications.

6. **Montage / Gardens Parking Structure**

Lighting

Retrofit existing standard efficiency T8 fluorescent lighting systems with new high efficiency LED lighting systems which will provide exceptional light quality, long life and instant start capability. Refer to the lighting inventory for specific locations and applications.

Retrofit existing incandescent lighting with new high efficiency LED lighting systems which will provide exceptional light quality, long life and instant start capability. Refer to the lighting inventory for specific locations and applications.

Install fixture mounted occupancy sensors on appropriate lighting fixtures to automatically dim lighting levels during periods of inactivity. The system will automatically return to full brightness when movement is sensed in the area. Refer to the lighting inventory for specific locations and applications.

7. **Santa Monica 5's Parking Structure**

Lighting

Retrofit existing standard efficiency T8 fluorescent lighting systems with new high efficiency LED lighting systems which will provide exceptional light quality, long life and instant start capability. Refer to the lighting inventory for specific locations and applications.

Retrofit existing incandescent lighting with new high efficiency LED lighting systems which will provide exceptional light quality, long life and instant start capability. Refer to the lighting inventory for specific locations and applications.

Replace existing exterior building and/or pole mounted HID lighting systems with high efficiency LED lighting systems that provide exceptional light quality, long life and instant start capability. Refer to the lighting inventory for specific locations and applications.

Install fixture mounted occupancy sensors on appropriate lighting fixtures to automatically dim lighting levels during periods of inactivity. The system will automatically return to full brightness when movement is sensed in the area. Refer to the lighting inventory for specific locations and applications.

d. **PARKS / MEDIANS**

1. **Beverly Gardens / Santa Monica Medians**

Lighting

Retrofit existing standard efficiency T8 fluorescent lighting systems with new high efficiency LED lighting systems which will provide exceptional light quality, long life and instant start capability. Refer to the lighting inventory for specific locations and applications.

Retrofit existing incandescent lighting systems with new high efficiency LED lighting systems which will provide exceptional light quality, long life and instant start capability. Refer to the lighting inventory for specific locations and applications.

Replace existing exterior building and/or pole mounted HID lighting systems with high efficiency LED lighting systems that provide exceptional light quality, long life and instant start capability. Refer to the lighting inventory for specific locations and applications.

Irrigation
Install a weather based smart irrigation control system. The controllers will have a wide range of communication options, including radio frequency, cellular, Ethernet, dial-up, and hardwired cable. This will allow each station to use the most reliable, cost effective means of communication based on what is available at each individual site. The system will monitor local weather on a daily basis and automatically adjust controller's irrigation schedules based upon plant watering needs and with the ET (Evapo-transpiration rate).

2. **Burton Way Medians**

Irrigation
Install a weather based smart irrigation control system. The controllers will have a wide range of communication options, including radio frequency, cellular, Ethernet, dial-up, and hardwired cable. This will allow each station to use the most reliable, cost effective means of communication based on what is available at each individual site. The system will monitor local weather on a daily basis and automatically adjust controller's irrigation schedules based upon plant watering needs and with the ET (Evapo-transpiration rate).

Install a flow sensor / master valve assembly capable of detecting an unexpected high flow event (ruptured pipe) and responding by shutting off the water supply. Scope includes the installation of the flow sensor, interlock to the master valve, typical trenching requirements and start-up/testing of the new system. If any major issues are discovered during the construction phase while uncovering the existing system, the issues will be compiled in a brief report and submitted to the City for further action.

3. **Cold Water Canyon Park**

Lighting
Replace existing exterior building and/or pole mounted HID lighting systems with high efficiency LED lighting systems that provide exceptional light quality, long life and instant start capability. Refer to the lighting inventory for specific locations and applications.

Irrigation
Install a weather based smart irrigation control system. The controllers will have a wide range of communication options, including radio frequency, cellular,

Ethernet, dial-up, and hardwired cable. This will allow each station to use the most reliable, cost effective means of communication based on what is available at each individual site. The system will monitor local weather on a daily basis and automatically adjust controller's irrigation schedules based upon plant watering needs and with the ET (Evapo-transpiration rate).

Install a flow sensor / master valve assembly capable of detecting an unexpected high flow event (ruptured pipe) and responding by shutting off the water supply. Scope includes the installation of the flow sensor, interlock to the master valve, typical trenching requirements and start-up/testing of the new system. If any major issues are discovered during the construction phase while uncovering the existing system, the issues will be compiled in a brief report and submitted to the City for further action.

4. **La Cienega Park and Tennis Center**

HVAC

Replace (6) split system heat pumps ranging from 2-5 tons with new high efficiency units of similar size and capacity. Scope will include installation of the new units, duct/curb modifications, disconnection/reconnections of the existing electrical lines, condensate connections, control connections, and start-up/testing of the new units. Refer to the replacement mechanical inventory for details on quantities, type and locations.

Lighting

Retrofit existing standard efficiency T8 fluorescent lighting systems with new high efficiency LED lighting systems which will provide exceptional light quality, long life and instant start capability. Refer to the lighting inventory for specific locations and applications.

Replace existing exterior building and/or pole mounted HID lighting systems with high efficiency LED lighting systems that provide exceptional light quality, long life and instant start capability. Refer to the lighting inventory for specific locations and applications.

Irrigation

Install a weather based smart irrigation control system. The controllers will have a wide range of communication options, including radio frequency, cellular, Ethernet, dial-up, and hardwired cable. This will allow each station to use the most reliable, cost effective means of communication based on what is available at each individual site. The system will monitor local weather on a daily basis and automatically adjust controller's irrigation schedules based upon plant watering needs and with the ET (Evapo-transpiration rate).

Install a flow sensor / master valve assembly capable of detecting an unexpected high flow event (ruptured pipe) and responding by shutting off the water supply. Scope includes the installation of the flow sensor, interlock to the master valve, typical trenching requirements and start-up/testing of the new system. If any

major issues are discovered during the construction phase while uncovering the existing system, the issues will be compiled in a brief report and submitted to the City for further action.

5. **Roxbury Park**

Irrigation

Install a weather based smart irrigation control system. The controllers will have a wide range of communication options, including radio frequency, cellular, Ethernet, dial-up, and hardwired cable. This will allow each station to use the most reliable, cost effective means of communication based on what is available at each individual site. The system will monitor local weather on a daily basis and automatically adjust controller's irrigation schedules based upon plant watering needs and with the ET (Evapo-transpiration rate).

6. **Sunset Median**

Irrigation

Install a weather based smart irrigation control system. The controllers will have a wide range of communication options, including radio frequency, cellular, Ethernet, dial-up, and hardwired cable. This will allow each station to use the most reliable, cost effective means of communication based on what is available at each individual site. The system will monitor local weather on a daily basis and automatically adjust controller's irrigation schedules based upon plant watering needs and with the ET (Evapo-transpiration rate).

Install a flow sensor / master valve assembly capable of detecting an unexpected high flow event (ruptured pipe) and responding by shutting off the water supply. Scope includes the installation of the flow sensor, interlock to the master valve, typical trenching requirements and start-up/testing of the new system. If any major issues are discovered during the construction phase while uncovering the existing system, the issues will be compiled in a brief report and submitted to the City for further action.

7. **Whittier Median**

Irrigation

Install a weather based smart irrigation control system. The controllers will have a wide range of communication options, including radio frequency, cellular, Ethernet, dial-up, and hardwired cable. This will allow each station to use the most reliable, cost effective means of communication based on what is available at each individual site. The system will monitor local weather on a daily basis and automatically adjust controller's irrigation schedules based upon plant watering needs and with the ET (Evapo-transpiration rate).

Install a flow sensor / master valve assembly capable of detecting an unexpected high flow event (ruptured pipe) and responding by shutting off the water supply. Scope includes the installation of the flow sensor, interlock to the master valve, typical trenching requirements and start-up/testing of the new system. If any major issues are discovered during the construction phase while uncovering the

existing system, the issues will be compiled in a brief report and submitted to the City for further action.

8. **Will Rodgers Park**

Lighting

Retrofit existing compact fluorescent (CFL) lighting systems with new high efficiency LED lighting systems which will provide exceptional light quality, long life and instant start capability. Refer to the lighting inventory for specific locations and applications.

Replace existing exterior building and/or pole mounted HID lighting systems with high efficiency LED lighting systems that provide exceptional light quality, long life and instant start capability. Refer to the lighting inventory for specific locations and applications.

Irrigation

Install a weather based smart irrigation control system. The controllers will have a wide range of communication options, including radio frequency, cellular, Ethernet, dial-up, and hardwired cable. This will allow each station to use the most reliable, cost effective means of communication based on what is available at each individual site. The system will monitor local weather on a daily basis and automatically adjust controller's irrigation schedules based upon plant watering needs and with the ET (Evapo-transpiration rate).

Install a flow sensor / master valve assembly capable of detecting an unexpected high flow event (ruptured pipe) and responding by shutting off the water supply. Scope includes the installation of the flow sensor, interlock to the master valve, typical trenching requirements and start-up/testing of the new system. If any major issues are discovered during the construction phase while uncovering the existing system, the issues will be compiled in a brief report and submitted to the City for further action.

9. **Arnaz Mini Park**

Irrigation

Install a weather based smart irrigation control system. The controllers will have a wide range of communication options, including radio frequency, cellular, Ethernet, dial-up, and hardwired cable. This will allow each station to use the most reliable, cost effective means of communication based on what is available at each individual site. The system will monitor local weather on a daily basis and automatically adjust controller's irrigation schedules based upon plant watering needs and with the ET (Evapo-transpiration rate).

10. **Hamel Mini Park**

Irrigation

Install a weather based smart irrigation control system. The controllers will have a wide range of communication options, including radio frequency, cellular, Ethernet, dial-up, and hardwired cable. This will allow each station to use the

most reliable, cost effective means of communication based on what is available at each individual site. The system will monitor local weather on a daily basis and automatically adjust controller's irrigation schedules based upon plant watering needs and with the ET (Evapo-transpiration rate).

11. **Maltz Mini Park**

Lighting

Replace existing exterior building and/or pole mounted HID lighting systems with high efficiency LED lighting systems that provide exceptional light quality, long life and instant start capability. Refer to the lighting inventory for specific locations and applications.

Irrigation

Install a weather based smart irrigation control system. The controllers will have a wide range of communication options, including radio frequency, cellular, Ethernet, dial-up, and hardwired cable. This will allow each station to use the most reliable, cost effective means of communication based on what is available at each individual site. The system will monitor local weather on a daily basis and automatically adjust controller's irrigation schedules based upon plant watering needs and with the ET (Evapo-transpiration rate).

12. **Oakhurst Mini Park**

Irrigation

Install a weather based smart irrigation control system. The controllers will have a wide range of communication options, including radio frequency, cellular, Ethernet, dial-up, and hardwired cable. This will allow each station to use the most reliable, cost effective means of communication based on what is available at each individual site. The system will monitor local weather on a daily basis and automatically adjust controller's irrigation schedules based upon plant watering needs and with the ET (Evapo-transpiration rate).

Install a flow sensor / master valve assembly capable of detecting an unexpected high flow event (ruptured pipe) and responding by shutting off the water supply. Scope includes the installation of the flow sensor, interlock to the master valve, typical trenching requirements and start-up/testing of the new system. If any major issues are discovered during the construction phase while uncovering the existing system, the issues will be compiled in a brief report and submitted to the City for further action.

13. **Reeves Mini Park**

Irrigation

Install a weather based smart irrigation control system. The controllers will have a wide range of communication options, including radio frequency, cellular, Ethernet, dial-up, and hardwired cable. This will allow each station to use the most reliable, cost effective means of communication based on what is available at each individual site. The system will monitor local weather on a daily basis

and automatically adjust controller's irrigation schedules based upon plant watering needs and with the ET (Evapo-transpiration rate).

Install a flow sensor / master valve assembly capable of detecting an unexpected high flow event (ruptured pipe) and responding by shutting off the water supply. Scope includes the installation of the flow sensor, interlock to the master valve, typical trenching requirements and start-up/testing of the new system. If any major issues are discovered during the construction phase while uncovering the existing system, the issues will be compiled in a brief report and submitted to the City for further action.

14. **Rexford Mini Park**

Irrigation

Install a weather based smart irrigation control system. The controllers will have a wide range of communication options, including radio frequency, cellular, Ethernet, dial-up, and hardwired cable. This will allow each station to use the most reliable, cost effective means of communication based on what is available at each individual site. The system will monitor local weather on a daily basis and automatically adjust controller's irrigation schedules based upon plant watering needs and with the ET (Evapo-transpiration rate).

6. OPTIONAL SCOPE

The following scope is optional and is not included in the contract price. Should the Purchaser elect to proceed with this scope, all terms and conditions of this contract will apply. Election to proceed with this scope must be made within 60 days of execution of the main contract.

Irrigation

Replace 39 irrigation controllers at the sites and in the quantities noted in the table that follows. The replacement controllers will be new "smart" controllers capable of communicating with a central irrigation management and monitoring system. The central irrigation control system will have visual maps with controller information, station level programming capabilities, and the ability to use current and historic evapotranspiration (ET) rates to create a water-savings program. The proposed controllers will have a wide range of communication option capabilities including radio frequency, cellular, Ethernet, dial-up, and hardwired cable. This will allow each station to use the most reliable, cost effective means of communication. This amendment assumes using radio via the existing radio frequency owned by the City.

CONTROLLER REPLACEMENT MATRIX

Site Name	Controller Quantity
Greystone	6
Trousdale Estates	1
Rexford Reservoir	1
North Rodeo	1
City Hall	3
Public Works	2
Third St Parking Garage	1
New PW Bldg. on 3rd	1
Fuel Pump Bamboo Planter	1
La Cienega Picnic Area	1
Olympic/Beverly Island	1
Santa Monica 5 Parking Structure	1
Wilshire Islands	10
Business Triangles	4
Beverlywil & Smithwood	1
Doheny Fire Station	2
Spaulding/Moreno Median	1
San Vicente/Wilshire Median	1

The addition of this optional scope will continue to allow the overall Energy Performance Project to comply with the guaranteed savings requirements as delineated in the associated Measurement and Verification Agreement dated August 18, 2015 and CA Gov. Code 4217.

Price: $217,778.00 (Includes equipment, labor, taxes and bonds. Assumes reuse of existing controller enclosures.)

The price of this optional scope, if selected, will be added to the main contract price.

ATTACHMENT 1 TO APPENDIX B

Lighting Detail

City of Beverly Hills - Lighting Detail Report

(sorted by building, floor, area)

CLIMATEC BUILDING TECHNOLOGIES GROUP

Beverly Gardens Park -

PRE-RETROFIT							POST RETROFIT							
Location	Existing Fixture Description	Qty	Wt/Fxt	kW	Hours	kWh	Qty	Retrofit Code Description (Sensor in RED)	Wt/Fxt	kW	Hours	kWh	kW Svd	kWh Svd
Building/Area: Main Building														
1st Floor														
Rf#-1 Rm - SM Blvd @ Foothill	MH 1L deco bollard, MH 70w, HID ballast	12	95	1.14	4,380	4,993	12	RL035/s - (1) LED 35w screw in lamp multivolt driver	35	0.42	4,380	1,840	0.72	3,154
Rf#-2 Rm - SM Blvd @ Foothill - Pergola	Inc. 1L flood, knuckle, Inc. 1L 75w hal, n/a	2	75	0.15	4,380	657	2	NL040/fld - New LED area flood, 60,000+ hour L70 rated life, 40w	40	0.08	4,380	350	0.07	307
Rf#-3 Rm - SM Blvd @ Foothill - Trellis	Inc. 1L flood, knuckle, Inc. 1L 75w hal, n/a	2	75	0.15	4,380	657	2	NL040/fld - New LED area flood, 60,000+ hour L70 rated life, 40w	40	0.08	4,380	350	0.07	307
Rf#-4 Rm - SM Blvd @ Canon MRR	1x4 2L troffer, F32T8 28w, electronic ballast	4	48	0.192	4,380	841	4	RL040/tkit - (1) LED 40w linear recessed troffer retrofit kit, 50,000 hour life at L70	40	0.16	4,380	701	0.032	140
Rf#-5 Rm - SM Blvd @ Canon WRR	1x4 2L troffer, F32T8 28w, electronic ballast	4	48	0.192	4,380	841	4	RL040/tkit - (1) LED 40w linear recessed troffer retrofit kit, 50,000 hour life at L70	40	0.16	4,380	701	0.032	140
Rf#-6 Rm - SM Blvd @ Canon Exterior	MH 1L wm wall pack small, MH 70w, HID ballast	2	95	0.19	4,380	832	2	NL020/wp/fc - New LED wall pack full cut off, 50,000 hour L70 rated life, 20w	20	0.04	4,380	175	0.15	657
Rf#-7 Rm - SM Blvd @ Canon Exterior	CF 1L wm vandal, CFL 15w, CFL ballast	2	15	0.03	4,380	131	2	DND - DND: (do not do, fixtures left as is)	15	0.03	4,380	131	0	0
Rf#-8 Rm - SM Blvd @ Canon Fountain	MH 1L post top deco globe, MH 175w, HID ballast	12	215	2.58	4,380	11,300	12	RL045/s - (1) LED 45w screw in lamp multivolt driver	45	0.54	4,380	2,365	2.04	8,935
Rf#-9 Rm - SM Blvd @ Wilshire Pump Bldg	CF 1L flood, knuckle, CFL 15w, CFL ballast	2	15	0.03	4,380	131	2	DND - DND: (do not do, fixtures left as is)	15	0.03	4,380	131	0	0
Qty and kW for Beverly Gardens Park :		**42**		**4.7**			**42**			**1.5**			**3.1**	
kWh for Beverly Gardens Park :						**20,385**						**6,744**		**13,640**

W* = wall switch sensor; C* = ceiling sensor; E* = existing sensor, L* Dimming Control

City of Beverly Hills - Lighting Detail Report

(sorted by building, floor, area)

CLIMATEC
BUILDING TECHNOLOGIES GROUP

Camden Parking Structure -

PRE-RETROFIT							POST RETROFIT							
Location	Existing Fixture Description	Qty	Wt/Fxt	kW	Hours	kWh	Qty	Retrofit Code Description (Sensor in RED)	Wt/Fxt	kW	Hours	kWh	kW Svd	kWh Svd
Building/Area: Main Building														
1st Floor														
Rf#-15 Rm - Elevator Lobby	HPS 1L wm wall pack small, HPS 50w, HID ballast	1	68	0.068	8,760	596	1	NL020/wp/fc - New LED wall pack full cut off, 50,000 hour L70 rated life, 20w	20	0.02	8,760	175	0.048	420
Rf#-16 Rm - Parking & Entry	1x4 1L strip w/sensors, LED 15w, n/a	32	15	0.48	8,760	4,205	32	DND - DND: (do not do, fixtures left as is)	15	0.48	8,760	4,205	0	0
Rf#-18 Rm - MRR	1x4 2L wrap, F32T8 28w, electronic ballast	1	48	0.048	8,760	420	1	NL040/4wp/s - New LED surface mounted radial wrap, 4' (1) LED dimming driver, on board occupancy comb	40	0.04	3,504	140	0.008	280
Rf#-19 Rm - WRR	1x4 2L wrap, F32T8 28w, electronic ballast	1	48	0.048	8,760	420	1	NL040/4wp/s - New LED surface mounted radial wrap, 4' (1) LED dimming driver, on board occupancy comb	40	0.04	3,504	140	0.008	280
2nd Floor														
Rf#-13 Rm - Elevator Lobby	HPS 1L wm wall pack small, HPS 50w, HID ballast	1	68	0.068	8,760	596	1	NL020/wp/fc - New LED wall pack full cut off, 50,000 hour L70 rated life, 20w	20	0.02	8,760	175	0.048	420
Rf#-14 Rm - Parking	1x4 1L strip w/sensors, LED 15w, n/a	30	15	0.45	8,760	3,942	30	DND - DND: (do not do, fixtures left as is)	15	0.45	8,760	3,942	0	0
3rd Floor														
Rf#-11 Rm - Elevator Lobby	HPS 1L wm wall pack small, HPS 50w, HID ballast	1	68	0.068	8,760	596	1	NL020/wp/fc - New LED wall pack full cut off, 50,000 hour L70 rated life, 20w	20	0.02	8,760	175	0.048	420
Rf#-12 Rm - Parking	1x4 1L strip w/sensors, LED 15w, n/a	30	15	0.45	8,760	3,942	30	DND - DND: (do not do, fixtures left as is)	15	0.45	8,760	3,942	0	0
4th Floor														
Rf#-9 Rm - Elevator Lobby	HPS 1L wm wall pack small, HPS 50w, HID ballast	1	68	0.068	8,760	596	1	NL020/wp/fc - New LED wall pack full cut off, 50,000 hour L70 rated life, 20w	20	0.02	8,760	175	0.048	420
Rf#-10 Rm - Parking	1x4 1L strip w/sensors, LED 15w, n/a	30	15	0.45	8,760	3,942	30	DND - DND: (do not do, fixtures left as is)	15	0.45	8,760	3,942	0	0
5th Floor														
Rf#-7 Rm - Elevator Lobby	HPS 1L wm wall pack small, HPS 50w, HID ballast	1	68	0.068	8,760	596	1	NL020/wp/fc - New LED wall pack full cut off, 50,000 hour L70 rated life, 20w	20	0.02	8,760	175	0.048	420
Rf#-8 Rm - Parking	1x4 1L strip w/sensors, LED 15w, n/a	30	15	0.45	8,760	3,942	30	DND - DND: (do not do, fixtures left as is)	15	0.45	8,760	3,942	0	0
6th Floor														
Rf#-1 Rm - Elevator 1	LED 1L rec can small, LED 5w, n/a	6	5	0.03	8,760	263	6	DND - DND: (do not do, fixtures left as is)	5	0.03	8,760	263	0	0
Rf#-2 Rm - Elevator 2	LED 1L rec can small, LED 5w, n/a	6	5	0.03	8,760	263	6	DND - DND: (do not do, fixtures left as is)	5	0.03	8,760	263	0	0
Rf#-3 Rm - Stairs @ Elevator - All Levels	HPS 1L wm wall pack small, HPS 50w, HID ballast	14	68	0.952	8,760	8,340	14	NL020/wp/fc - New LED wall pack full cut off, 50,000 hour L70 rated life, 20w	20	0.28	8,760	2,453	0.672	5,887
Rf#-4 Rm - Stairs @ Other - All Levels	HPS 1L wm wall pack small, HPS 50w, HID ballast	14	68	0.952	8,760	8,340	14	NL020/wp/fc - New LED wall pack full cut off, 50,000 hour L70 rated life, 20w	20	0.28	8,760	2,453	0.672	5,887
Rf#-5 Rm - Elevator Lobby	HPS 1L wm wall pack small, HPS 50w, HID ballast	1	68	0.068	8,760	596	1	NL020/wp/fc - New LED wall pack full cut off, 50,000 hour L70 rated life, 20w	20	0.02	8,760	175	0.048	420
Rf#-6 Rm - Parking - Top Deck	HPS 1L post top china hat, HPS 100w, HID ballast	2	130	0.26	4,380	1,139	2	RL045/s - (1) LED 45w screw in lamp multivolt driver	45	0.09	4,380	394	0.17	745

W* = wall switch sensor; C* = ceiling sensor; E* = existing sensor, L* Dimming Control

City of Beverly Hills - Lighting Detail Report

(sorted by building, floor, area)

CLIMATEC
BUILDING TECHNOLOGIES GROUP

Camden Parking Structure -

PRE-RETROFIT							POST RETROFIT							
Location	Existing Fixture Description	Qty	Wt/Fxt	kW	Hours	kWh	Qty	Retrofit Code Description (Sensor in RED)	Wt/Fxt	kW	Hours	kWh	kW Svd	kWh Svd
All														
Rf#-17 Rm - Pay Booth	2x2x 2L rec trf, F17T8 17w, electronic ballast	2	31	0.062	8,760	543	2	RL020/tkit - (1) LED 20w linear recessed troffer retrofit kit with new lens face cover, 70,000 hour life at	20	0.04	8,760	350	0.022	193
Qty and kW for Camden Parking Structure :		**204**		**5.1**			**204**			**3.2**			**1.8**	
kWh for Camden Parking Structure :						**43,274**						**27,479**		**15,792**

W* = wall switch sensor; C* = ceiling sensor; E* = existing sensor, L* Dimming Control

City of Beverly Hills - Lighting Detail Report

(sorted by building, floor, area)

CLIMATEC BUILDING TECHNOLOGIES GROUP

Coldwater Canyon Park -

PRE-RETROFIT							POST RETROFIT							
Location	Existing Fixture Description	Qty	Wt/Fxt	kW	Hours	kWh	Qty	Retrofit Code Description (Sensor in RED)	Wt/Fxt	kW	Hours	kWh	kW Svd	kWh Svd
Building/Area: Park														
1st Floor														
Rf#-1 Rm - Track	CF 1L bollard, CFL 42w, CFL ballast	12	45	0.54	4,380	2,365	12	DND - DND: (do not do, fixtures left as is)	45	0.54	4,380	2,365	0	0
Rf#-2 Rm - Near Park Bldg	MH 1L post top ACORN, MH 175w, HID ballast	3	215	0.645	4,380	2,825	3	RL045/s - (1) LED 45w screw in lamp multivolt driver	45	0.135	4,380	591	0.51	2,234
Rf#-3 Rm - MRR	1x4x 2L sm vapor tight, F32T8 28w, electronic ballast	2	48	0.096	8,760	841	2	DND - DND: (do not do, fixtures left as is)	48	0.096	8,760	841	0	0
Rf#-4 Rm - WRR	1x4x 2L sm vapor tight, F32T8 28w, electronic ballast	2	48	0.096	8,760	841	2	DND - DND: (do not do, fixtures left as is)	48	0.096	8,760	841	0	0
Rf#-5 Rm - Building Exterior	CF 1L wm wall pack small V, CFL 42w, CFL ballast	11	45	0.495	4,380	2,168	11	DND - DND: (do not do, fixtures left as is)	45	0.495	4,380	2,168	0	0
Rf#-6 Rm - Building Interior	1x4x 2L sm vapor tight, F32T8 28w, electronic ballast	6	48	0.288	2,000	576	6	DND - DND: (do not do, fixtures left as is)	48	0.288	2,000	576	0	0
Qty and kW for Coldwater Canyon Park :		**36**		**2.2**			**36**			**1.7**			**0.5**	
kWh for Coldwater Canyon Park :						**9,616**						**7,382**		**2,234**

W* = wall switch sensor; C* = ceiling sensor; E* = existing sensor, L* Dimming Control

City of Beverly Hills - Lighting Detail Report

(sorted by building, floor, area)

CLIMATEC BUILDING TECHNOLOGIES GROUP

Crescent North Parking Structure -

PRE-RETROFIT							POST RETROFIT								
Location	Existing Fixture Description	Qty	Wt/Fxt	kW	Hours	kWh	Qty	Retrofit Code Description (Sensor in RED)	Wt/Fxt	kW	Hours	kWh	kW Svd	kWh Svd
Building/Area: Main Building														
2nd Floor														
Rf#-13 Rm - Elevator Lobby	2x2x 2L rec trf, F17T8 17w, electronic ballast	2	31	0.062	8,760	543	2	RL020/tkit - (1) LED 20w linear recessed troffer retrofit kit with new lens face cover, 70,000 hour life at	20	0.04	8,760	350	0.022	193
Rf#-14 Rm - Parking	1x4 4L strip, F32T8 28w, electronic ballast	66	96	6.336	8,760	55,503	66	RL040/skit/s - (1) LED 40w linear strip retrofit kit, 50,000 hour life at L70 oemb	33	2.178	3,504	7,632	4.158	47,872
3rd Floor														
Rf#-11 Rm - Elevator Lobby	2x2x 2L rec trf, F17T8 17w, electronic ballast	2	31	0.062	8,760	543	2	RL020/tkit - (1) LED 20w linear recessed troffer retrofit kit with new lens face cover, 70,000 hour life at	20	0.04	8,760	350	0.022	193
Rf#-12 Rm - Parking	1x4 4L strip, F32T8 28w, electronic ballast	66	96	6.336	8,760	55,503	66	RL040/skit/s - (1) LED 40w linear strip retrofit kit, 50,000 hour life at L70 oemb	33	2.178	3,504	7,632	4.158	47,872
4th Floor														
Rf#-9 Rm - Elevator Lobby	2x2x 2L rec trf, F17T8 17w, electronic ballast	2	31	0.062	8,760	543	2	RL020/tkit - (1) LED 20w linear recessed troffer retrofit kit with new lens face cover, 70,000 hour life at	20	0.04	8,760	350	0.022	193
Rf#-10 Rm - Parking	1x4 4L strip, F32T8 28w, electronic ballast	66	96	6.336	8,760	55,503	66	RL040/skit/s - (1) LED 40w linear strip retrofit kit, 50,000 hour life at L70 oemb	33	2.178	3,504	7,632	4.158	47,872
B1														
Rf#-17 Rm - Elevator Lobby	2x2x 2L rec trf, F17T8 17w, electronic ballast	2	31	0.062	8,760	543	2	RL020/tkit - (1) LED 20w linear recessed troffer retrofit kit with new lens face cover, 70,000 hour life at	20	0.04	8,760	350	0.022	193
Rf#-18 Rm - Parking	1x4 4L strip, F32T8 28w, electronic ballast	66	96	6.336	8,760	55,503	66	RL040/skit/s - (1) LED 40w linear strip retrofit kit, 50,000 hour life at L70 oemb	33	2.178	3,504	7,632	4.158	47,872
B2														
Rf#-19 Rm - Elevator Lobby	2x2x 2L rec trf, F17T8 17w, electronic ballast	2	31	0.062	8,760	543	2	RL020/tkit - (1) LED 20w linear recessed troffer retrofit kit with new lens face cover, 70,000 hour life at	20	0.04	8,760	350	0.022	193
Rf#-20 Rm - Parking	1x4 4L strip, F32T8 28w, electronic ballast	66	96	6.336	8,760	55,503	66	RL040/skit/s - (1) LED 40w linear strip retrofit kit, 50,000 hour life at L70 oemb	33	2.178	3,504	7,632	4.158	47,872
G														
Rf#-15 Rm - Elevator Lobby	2x2x 2L rec trf, F17T8 17w, electronic ballast	2	31	0.062	8,760	543	2	RL020/tkit - (1) LED 20w linear recessed troffer retrofit kit with new lens face cover, 70,000 hour life at	20	0.04	8,760	350	0.022	193
Rf#-16 Rm - Parking	1x4 4L strip, F32T8 28w, electronic ballast	66	96	6.336	8,760	55,503	66	RL040/skit/s - (1) LED 40w linear strip retrofit kit, 50,000 hour life at L70 oemb	33	2.178	3,504	7,632	4.158	47,872
R														
Rf#-1 Rm - Elevator 1	LED 1L rec can small, LED 5w, n/a	6	5	0.03	8,760	263	6	DND - DND: (do not do, fixtures left as is)	5	0.03	8,760	263	0	0
Rf#-2 Rm - Elevator 2	LED 1L rec can small, LED 5w, n/a	6	5	0.03	8,760	263	6	DND - DND: (do not do, fixtures left as is)	5	0.03	8,760	263	0	0
Rf#-3 Rm - Stairs @ Elevator - All Levels	1x4 2L strip, F32T8 28w, electronic ballast	6	48	0.288	8,760	2,523	6	RL040/skit/s - (1) LED 40w linear strip retrofit kit, 50,000 hour life at L70 oemb	33	0.198	3,504	694	0.09	1,829
Rf#-4 Rm - Stairs @ Elevator - All Levels	1x4 1L strip, F32T8 28w, electronic ballast	6	25	0.15	8,760	1,314	6	RL040/skit/s - (1) LED 40w linear strip retrofit kit, 50,000 hour life at L70 oemb	33	0.198	3,504	694	-0.048	620
Rf#-5 Rm - Stairs @ Other - All Levels	1x4 2L strip, F32T8 28w, electronic ballast	6	48	0.288	8,760	2,523	6	RL040/skit/s - (1) LED 40w linear strip retrofit kit, 50,000 hour life at L70 oemb	33	0.198	3,504	694	0.09	1,829

W* = wall switch sensor; C* = ceiling sensor; E* = existing sensor, L* Dimming Control

City of Beverly Hills - Lighting Detail Report

(sorted by building, floor, area)

CLIMATEC
BUILDING TECHNOLOGIES GROUP

Crescent North Parking Structure -

PRE-RETROFIT							POST RETROFIT							
Location	Existing Fixture Description	Qty	Wt/Fxt	kW	Hours	kWh	Qty	Retrofit Code Description (Sensor in RED)	Wt/Fxt	kW	Hours	kWh	kW Svd	kWh Svd
Rf#-6 Rm - Stairs @ Other - All Levels	1x4 1L strip, F32T8 28w, electronic ballast	6	25	0.15	8,760	1,314	6	RL040/skit/s - (1) LED 40w linear strip retrofit kit, 50,000 hour life at L70 oemb	33	0.198	3,504	694	-0.048	620
Rf#-7 Rm - Elevator Lobby	1x4 2L strip, F32T8 28w, electronic ballast	1	48	0.048	8,760	420	1	RL040/skit/s - (1) LED 40w linear strip retrofit kit, 50,000 hour life at L70 oemb	33	0.033	3,504	116	0.015	305
Rf#-8 Rm - Parking - Top Deck	MH 1L shoe box, SqP, DB, MH 175w, HID ballast	12	215	2.58	4,380	11,300	12	NL060/p8e - New LED area light pole mount, 60,000+ hour L70 rated life, 60w	60	0.72	4,380	3,154	1.86	8,147
Qty and kW for Crescent North Parking Structure :		**457**		**42.0**			**457**			**14.9**			**27.0**	
kWh for Crescent North Parking Structure :						**356,199**						**54,464**		**301,740**

W* = wall switch sensor; C* = ceiling sensor; E* = existing sensor, L* Dimming Control

City of Beverly Hills - Lighting Detail Report

(sorted by building, floor, area)

CLIMATEC BUILDING TECHNOLOGIES GROUP

Crescent South Parking Structure -

PRE-RETROFIT							POST RETROFIT							
Location	Existing Fixture Description	Qty	Wt/Fxt	kW	Hours	kWh	Qty	Retrofit Code Description (Sensor in RED)	Wt/Fxt	kW	Hours	kWh	kW Svd	kWh Svd
Building/Area: Main Building														
1st Floor														
Rf#-1 Rm - RR	1x4 1L wrap, F32T8 28w, electronic ballast	1	25	0.025	8,760	219	1	RL040/skit/s - (1) LED 40w linear strip retrofit kit, 50,000 hour life at L70 oemb	33	0.033	3,504	116	-0.008	103
Rf#-2 Rm - Entry	1x8 1L ind hood, F96T8 59w, electronic ballast	78	59	4.602	8,760	40,314	78	RL040/skit/s - (1) LED 40w linear strip retrofit kit, 50,000 hour life at L70 oemb	33	2.574	3,504	9,019	2.028	31,294
Rf#-3 Rm - Pay Booth	1x4 2L wrap, F32T8 28w, electronic ballast	2	48	0.096	8,760	841	2	RL040/skit/s - (1) LED 40w linear strip retrofit kit, 50,000 hour life at L70 oemb	33	0.066	3,504	231	0.03	610
Rf#-4 Rm - Elevator 1	1x3 1L strip, F025T8 25w, electronic ballast	4	24	0.096	8,760	841	4	RL040/skit/s - (1) LED 40w linear strip retrofit kit, 50,000 hour life at L70 oemb	33	0.132	3,504	463	-0.036	378
Rf#-5 Rm - Elevator 2	1x3 1L strip, F025T8 25w, electronic ballast	4	24	0.096	8,760	841	4	RL040/skit/s - (1) LED 40w linear strip retrofit kit, 50,000 hour life at L70 oemb	33	0.132	3,504	463	-0.036	378
Rf#-6 Rm - Elevator 3	1x3 1L strip, F025T8 25w, electronic ballast	4	24	0.096	8,760	841	4	RL040/skit/s - (1) LED 40w linear strip retrofit kit, 50,000 hour life at L70 oemb	33	0.132	3,504	463	-0.036	378
Rf#-7 Rm - Elevator 4	1x3 1L strip, F025T8 25w, electronic ballast	4	24	0.096	8,760	841	4	RL040/skit/s - (1) LED 40w linear strip retrofit kit, 50,000 hour life at L70 oemb	33	0.132	3,504	463	-0.036	378
Rf#-8 Rm - Stair 1 - All Levels	1x4 2L wrap, F32T8 28w, electronic ballast	12	48	0.576	8,760	5,046	12	RL040/skit/s - (1) LED 40w linear strip retrofit kit, 50,000 hour life at L70 oemb	33	0.396	3,504	1,388	0.18	3,658
Rf#-9 Rm - Stair 2 - All Levels	1x4 2L wrap, F32T8 28w, electronic ballast	12	48	0.576	8,760	5,046	12	RL040/skit/s - (1) LED 40w linear strip retrofit kit, 50,000 hour life at L70 oemb	33	0.396	3,504	1,388	0.18	3,658
Rf#-10 Rm - Elevator Lobby A - All Levels	1x4 2L wrap, F32T8 28w, electronic ballast	12	48	0.576	8,760	5,046	12	RL040/skit/s - (1) LED 40w linear strip retrofit kit, 50,000 hour life at L70 oemb	33	0.396	3,504	1,388	0.18	3,658
Rf#-11 Rm - Elevator Lobby B - All Levels	1x4 2L wrap, F32T8 28w, electronic ballast	12	48	0.576	8,760	5,046	12	RL040/skit/s - (1) LED 40w linear strip retrofit kit, 50,000 hour life at L70 oemb	33	0.396	3,504	1,388	0.18	3,658
Rf#-12 Rm - Parking 1	1x8 4L strip, F32T8 28w, electronic ballast	50	96	4.8	8,760	42,048	50	RL080/skit/s - (1) LED 80w linear strip retrofit kit, 50,000 hour life at L70 oemb	66	3.3	3,504	11,563	1.5	30,485
2nd Floor														
Rf#-13 Rm - Parking 2	1x8 4L strip, F32T8 28w, electronic ballast	120	96	11.52	8,760	100,915	120	RL080/skit/s - (1) LED 80w linear strip retrofit kit, 50,000 hour life at L70 oemb	66	7.92	3,504	27,752	3.6	73,164
3rd Floor														
Rf#-14 Rm - Parking 3	1x8 4L strip, F32T8 28w, electronic ballast	120	96	11.52	8,760	100,915	120	RL080/skit/s - (1) LED 80w linear strip retrofit kit, 50,000 hour life at L70 oemb	66	7.92	3,504	27,752	3.6	73,164
4th Floor														
Rf#-15 Rm - Parking 4	1x8 4L strip, F32T8 28w, electronic ballast	120	96	11.52	8,760	100,915	120	RL080/skit/s - (1) LED 80w linear strip retrofit kit, 50,000 hour life at L70 oemb	66	7.92	3,504	27,752	3.6	73,164
5th Floor														
Rf#-16 Rm - Parking 5	1x8 4L strip, F32T8 28w, electronic ballast	120	96	11.52	8,760	100,915	120	RL080/skit/s - (1) LED 80w linear strip retrofit kit, 50,000 hour life at L70 oemb	66	7.92	3,504	27,752	3.6	73,164
6th Floor														
Rf#-17 Rm - Parking 6	1x8 4L strip, F32T8 28w, electronic ballast	120	96	11.52	8,760	100,915	120	RL080/skit/s - (1) LED 80w linear strip retrofit kit, 50,000 hour life at L70 oemb	66	7.92	3,504	27,752	3.6	73,164

W* = wall switch sensor; C* = ceiling sensor; E* = existing sensor, L* Dimming Control

City of Beverly Hills - Lighting Detail Report

(sorted by building, floor, area)

CLIMATEC
BUILDING TECHNOLOGIES GROUP

Crescent South Parking Structure -

PRE-RETROFIT							POST RETROFIT							
Location	Existing Fixture Description	Qty	Wt/Fxt	kW	Hours	kWh	Qty	Retrofit Code Description (Sensor in RED)	Wt/Fxt	kW	Hours	kWh	kW Svd	kWh Svd
Qty and kW for Crescent South Parking Structure :		795		69.8			795			47.7			22.1	
kWh for Crescent South Parking Structure :						611,544						167,093		444,456

W* = wall switch sensor; C* = ceiling sensor; E* = existing sensor, L* Dimming Control

City of Beverly Hills - Lighting Detail Report

(sorted by building, floor, area)

CLIMATEC BUILDING TECHNOLOGIES GROUP

Fire Dept. Headquarters -

PRE-RETROFIT							POST RETROFIT							
Location	Existing Fixture Description	Qty	Wt/Fxt	kW	Hours	kWh	Qty	Retrofit Code Description (Sensor in RED)	Wt/Fxt	kW	Hours	kWh	kW Svd	kWh Svd
Building/Area: Main Building														
1st Floor														
Rf#-1 Rm - Garage Bay	2x4x 3L rec trf, F32T8 32w, electronic ballast	98	90	8.82	3,500	30,870	98	RL040/tkit - (1) LED 40w linear recessed troffer retrofit kit, 50,000 hour life at L70	33	3.234	3,500	11,319	5.586	19,551
Rf#-2 Rm - All Other Interior Space	DND (do not do, left as is), n/a, n/a		0	0	3,000	0	0	DND - DND: (do not do, fixtures left as is)	0	0	3,000	0	0	0
Rf#-4 Rm - Ext-Bldg Mount	MH 1L flood, yoke, MH 175w, HID ballast	13	215	2.795	4,380	12,242	13	RL050/kit - (1) LED 50w retrofit kit, 50,000 hour life at L70	50	0.65	4,380	2,847	2.145	9,395
2nd Floor														
Rf#-3 Rm - Game Room/Hallway	2x4x 2L rec trf, F32T8 32w, electronic ballast	20	59	1.18	8,760	10,337	20	RL040/tkit - (1) LED 40w linear recessed troffer retrofit kit, 50,000 hour life at L70	33	0.66	8,760	5,782	0.52	4,555
Qty and kW for Fire Dept. Headquarters :		**131**		**12.8**			**131**			**4.5**			**8.3**	
kWh for Fire Dept. Headquarters :						**53,449**						**19,948**		**33,501**

W* = wall switch sensor; C* = ceiling sensor; E* = existing sensor, L* Dimming Control

City of Beverly Hills - Lighting Detail Report

(sorted by building, floor, area)

CLIMATEC
BUILDING TECHNOLOGIES GROUP

Fire Station #2 -

PRE-RETROFIT							POST RETROFIT							
Location	Existing Fixture Description	Qty	Wt/Fxt	kW	Hours	kWh	Qty	Retrofit Code Description (Sensor in RED)	Wt/Fxt	kW	Hours	kWh	kW Svd	kWh Svd
Building/Area: Main Building														
1st Floor														
Rf#-1 Rm - All Other Interior Space	DND (do not do, left as is), n/a, n/a		0	0	3,000	0	0	DND - DND: (do not do, fixtures left as is)	0	0	3,000	0	0	0
Rf#-1 Rm - Ext-Bldg Mount	MH 1L wm wall pack large FT, HPS 150w, HID ballast	1	195	0.195	4,380	854	1	RL025/kit - (1) LED 25w retrofit kit, 50,000 hour life at L70	25	0.025	4,380	110	0.17	745
Rf#-1 Rm - Ext-Bldg Mount	HPS 1L rec can, HPS 70w, HID ballast	11	95	1.045	4,380	4,577	11	RL025/kit - (1) LED 25w retrofit kit, 50,000 hour life at L70	25	0.275	4,380	1,204	0.77	3,373
Rf#-1 Rm - Ext Pole Mount	MH 1L flood, adj, 1QH, MH 250w, HID ballast	4	295	1.18	4,380	5,168	4	NL060/p8e - New LED area light pole mount, 60,000+ hour L70 rated life, 60w	60	0.24	4,380	1,051	0.94	4,117
Rf#-1 Rm - Ext-Bldg Mount	MH 1L wm wall pack medium FT, MH 100w, HID ballast	1	130	0.13	4,380	569	1	NL020/wp/fc - New LED wall pack full cut off, 50,000 hour L70 rated life, 20w	20	0.02	4,380	88	0.11	482
Rf#-1 Rm - Garage Bay	1x8x 2L sm ind hood, F96T8 59w, electronic ballast	15	115	1.725	3,500	6,038	15	RL080/skit/s - (1) LED 80w linear strip retrofit kit, 50,000 hour life at L70 oemb	80	1.2	1,400	1,680	0.525	4,358
Building/Area: Outer Bldg														
1st Floor														
Rf#-1 Rm - All Other Interior Space	DND (do not do, left as is), n/a, n/a		0	0	3,000	0	0	DND - DND: (do not do, fixtures left as is)	0	0	3,000	0	0	0
Rf#-1 Rm - Ext-Bldg Mount	MH 1L wm wall pack large FT, HPS 150w, HID ballast	1	195	0.195	4,380	854	1	RL025/kit - (1) LED 25w retrofit kit, 50,000 hour life at L70	25	0.025	4,380	110	0.17	745
Qty and kW for Fire Station #2 :		**33**		**4.5**			**33**			**1.8**			**2.7**	
kWh for Fire Station #2 :						**18,061**						**4,243**		**13,820**

W* = wall switch sensor; C* = ceiling sensor; E* = existing sensor, L* Dimming Control

City of Beverly Hills - Lighting Detail Report

(sorted by building, floor, area)

CLIMATEC
BUILDING TECHNOLOGIES GROUP

La Cienega Park -

PRE-RETROFIT							POST RETROFIT							
Location	Existing Fixture Description	Qty	Wt/Fxt	kW	Hours	kWh	Qty	Retrofit Code Description (Sensor in RED)	Wt/Fxt	kW	Hours	kWh	kW Svd	kWh Svd
Building/Area: Community Center														
All														
Rf#-1 Rm - All Interior Space	DND (do not do, left as is), n/a, n/a		0	0	3,000	0	0	DND - DND: (do not do, fixtures left as is)	0	0	3,000	0	0	0
Rf#-2 Rm - Ext-Bldg Mount	1x4x 1L wm vapor tight, F32T8 28w, electronic ballast	8	25	0.2	4,380	876	8	RL020/ukit - (1) LED 25w retrofit kit, 50,000 hour life at L70	20	0.16	4,380	701	0.04	175
Rf#-3 Rm - Ext-Bld Mnted	HPS 1L rec can, HPS 70w, HID ballast	8	95	0.76	4,380	3,329	8	RL025/kit - (1) LED 25w retrofit kit, 50,000 hour life at L70	25	0.2	4,380	876	0.56	2,453
Rf#-4 Rm - Ext-Pole Monted	HPS 1L post top ACORN, HPS 150w, HID ballast	2	195	0.39	4,380	1,708	2	RL045/s - (1) LED 45w screw in lamp multivolt driver	45	0.09	4,380	394	0.3	1,314
Building/Area: Park														
All														
Rf#-5 Rm - Ext-Pole Monted	MH 1L shoe box (wood pole), MH 175w, HID ballast	1	215	0.215	4,380	942	1	NL060/p8e - New LED area light pole mount, 60,000+ hour L70 rated life, 60w	60	0.06	4,380	263	0.155	679
Rf#-6 Rm - Ext-Pole Monted	HPS 1L post top ACORN, HPS 150w, HID ballast	13	195	2.535	4,380	11,103	13	RL045/s - (1) LED 45w screw in lamp multivolt driver	45	0.585	4,380	2,562	1.95	8,541
	Qty and kW for La Cienega Park :	**32**		**4.1**			**32**			**1.1**			**3.0**	
	kWh for La Cienega Park :					**17,958**						**4,796**		**13,162**

W* = wall switch sensor; C* = ceiling sensor; E* = existing sensor, L* Dimming Control

City of Beverly Hills - Lighting Detail Report

(sorted by building, floor, area)

CLIMATEC
BUILDING TECHNOLOGIES GROUP

Maltz Park -

PRE-RETROFIT							POST RETROFIT							
Location	Existing Fixture Description	Qty	Wt/Fxt	kW	Hours	kWh	Qty	Retrofit Code Description (Sensor in RED)	Wt/Fxt	kW	Hours	kWh	kW Svd	kWh Svd
Building/Area: Park														
1st Floor														
Rf#-1 Rm - Pathway	MH 1L traditional bollard, MH 70w, HID ballast	4	95	0.38	4,380	1,664	4	RL035/s - (1) LED 35w screw in lamp multivolt driver	35	0.14	4,380	613	0.24	1,051
Rf#-2 Rm - Sculpture	CF 1L flood, knuckle, CFL 26w, CFL ballast	2	30	0.06	4,380	263	2	DND - DND: (do not do, fixtures left as is)	30	0.06	4,380	263	0	0
	Qty and kW for Maltz Park :	**6**		**0.4**			**6**			**0.2**			**0.2**	
					kWh for Maltz Park :	**1,927**						**876**		**1,051**

W* = wall switch sensor; C* = ceiling sensor; E* = existing sensor, L* Dimming Control

City of Beverly Hills - Lighting Detail Report

(sorted by building, floor, area)

CLIMATEC BUILDING TECHNOLOGIES GROUP

Montage / Gardens Parking Structure -

PRE-RETROFIT							POST RETROFIT							
Location	Existing Fixture Description	Qty	Wt/Fxt	kW	Hours	kWh	Qty	Retrofit Code Description (Sensor in RED)	Wt/Fxt	kW	Hours	kWh	kW Svd	kWh Svd
Building/Area: Main Building														
1st Floor														
Rf#-1 Rm - Entry Ramp	1x4 1L wrap, F32T8 28w, electronic ballast	10	25	0.25	8,760	2,190	10	RL040/skit/s - (1) LED 40w linear strip retrofit kit, 50,000 hour life at L70 oemb	33	0.33	3,504	1,156	-0.08	1,034
Rf#-2 Rm - Entry Ramp	1x8 4L strip, F32T8 28w, electronic ballast	10	96	0.96	8,760	8,410	10	RL080/skit/s - (1) LED 80w linear strip retrofit kit, 50,000 hour life at L70 oemb	66	0.66	3,504	2,313	0.3	6,097
Rf#-3 Rm - Elevator 1	Inc. 1L rec can small, Inc. 35w MR16, n/a	6	35	0.21	8,760	1,840	6	RL081/s/mr16 - (1) LED 8w MR16 lamp	8	0.048	8,760	420	0.162	1,419
Rf#-4 Rm - Elevator 2	Inc. 1L rec can small, Inc. 35w MR16, n/a	6	35	0.21	8,760	1,840	6	RL081/s/mr16 - (1) LED 8w MR16 lamp	8	0.048	8,760	420	0.162	1,419
Rf#-5 Rm - Elevator 3	Inc. 1L rec can small, Inc. 35w MR16, n/a	6	35	0.21	8,760	1,840	6	RL081/s/mr16 - (1) LED 8w MR16 lamp	8	0.048	8,760	420	0.162	1,419
Rf#-6 Rm - Elevator 4	Inc. 1L rec can small, Inc. 35w MR16, n/a	6	35	0.21	8,760	1,840	6	RL081/s/mr16 - (1) LED 8w MR16 lamp	8	0.048	8,760	420	0.162	1,419
Rf#-7 Rm - Elevator 5	Inc. 1L rec can small, Inc. 35w MR16, n/a	6	35	0.21	8,760	1,840	6	RL081/s/mr16 - (1) LED 8w MR16 lamp	8	0.048	8,760	420	0.162	1,419
Rf#-8 Rm - Stair 1 - All Levels	1x4 2L strip, F32T8 28w, electronic ballast	18	48	0.864	8,760	7,569	18	RL040/skit/s - (1) LED 40w linear strip retrofit kit, 50,000 hour life at L70 oemb	33	0.594	3,504	2,081	0.27	5,487
Rf#-9 Rm - Stair 2 - All Levels	1x4 2L strip, F32T8 28w, electronic ballast	18	48	0.864	8,760	7,569	18	RL040/skit/s - (1) LED 40w linear strip retrofit kit, 50,000 hour life at L70 oemb	33	0.594	3,504	2,081	0.27	5,487
Rf#-10 Rm - Stair 3 - All Levels	1x4 2L strip, F32T8 28w, electronic ballast	18	48	0.864	8,760	7,569	18	RL040/skit/s - (1) LED 40w linear strip retrofit kit, 50,000 hour life at L70 oemb	33	0.594	3,504	2,081	0.27	5,487
Rf#-11 Rm - Elevator Lobby 1	Inc. 1L rec can small, Inc. 35w MR16, n/a	6	35	0.21	8,760	1,840	6	RL081/s/mr16 - (1) LED 8w MR16 lamp	8	0.048	8,760	420	0.162	1,419
Rf#-12 Rm - Elevator Lobby 1	1x4 2L strip, F32T8 28w, electronic ballast	5	48	0.24	8,760	2,102	5	RL040/skit/s - (1) LED 40w linear strip retrofit kit, 50,000 hour life at L70 oemb	33	0.165	3,504	578	0.075	1,524
Rf#-13 Rm - Elevator Lobby 2	Inc. 1L rec can small, Inc. 35w MR16, n/a	6	35	0.21	8,760	1,840	6	RL081/s/mr16 - (1) LED 8w MR16 lamp	8	0.048	8,760	420	0.162	1,419
Rf#-14 Rm - Elevator Lobby 2	1x4 2L strip, F32T8 28w, electronic ballast	5	48	0.24	8,760	2,102	5	RL040/skit/s - (1) LED 40w linear strip retrofit kit, 50,000 hour life at L70 oemb	33	0.165	3,504	578	0.075	1,524
Rf#-15 Rm - Elevator Lobby 3	Inc. 1L rec can small, Inc. 35w MR16, n/a	4	35	0.14	8,760	1,226	4	RL081/s/mr16 - (1) LED 8w MR16 lamp	8	0.032	8,760	280	0.108	946
Rf#-16 Rm - Parking - Private Not Counted	1x8 4L strip, F32T8 28w, electronic ballast		96	0	8,760	0	0	DND - DND: (do not do, fixtures left as is)	96	0	8,760	0	0	0
Rf#-17 Rm - Parking - Private Not Counted	1x4 2L strip, F32T8 28w, electronic ballast		48	0	8,760	0	0	DND - DND: (do not do, fixtures left as is)	48	0	8,760	0	0	0
2nd Floor														
Rf#-18 Rm - Ramp	1x8 4L strip, F32T8 28w, electronic ballast	10	96	0.96	8,760	8,410	10	RL080/skit/s - (1) LED 80w linear strip retrofit kit, 50,000 hour life at L70 oemb	66	0.66	3,504	2,313	0.3	6,097
Rf#-19 Rm - Parking	1x8 4L strip, F32T8 28w, electronic ballast	170	96	16.32	8,760	142,963	170	RL080/skit/s - (1) LED 80w linear strip retrofit kit, 50,000 hour life at L70 oemb	66	11.22	3,504	39,315	5.1	103,648
Rf#-20 Rm - Parking	1x4 2L strip, F32T8 28w, electronic ballast	5	48	0.24	8,760	2,102	5	RL040/skit/s - (1) LED 40w linear strip retrofit kit, 50,000 hour life at L70 oemb	33	0.165	3,504	578	0.075	1,524
3rd Floor														

W* = wall switch sensor; C* = ceiling sensor; E* = existing sensor, L* Dimming Control

City of Beverly Hills - Lighting Detail Report

(sorted by building, floor, area)

CLIMATEC BUILDING TECHNOLOGIES GROUP

Montage / Gardens Parking Structure -

PRE-RETROFIT							POST RETROFIT							
Location	Existing Fixture Description	Qty	Wt/Fxt	kW	Hours	kWh	Qty	Retrofit Code Description (Sensor in RED)	Wt/Fxt	kW	Hours	kWh	kW Svd	kWh Svd
Rf#-21 Rm - Ramp	1x8 4L strip, F32T8 28w, electronic ballast	10	96	0.96	8,760	8,410	10	RL080/skit/s - (1) LED 80w linear strip retrofit kit, 50,000 hour life at L70 oemb	66	0.66	3,504	2,313	0.3	6,097
Rf#-22 Rm - Parking	1x8 4L strip, F32T8 28w, electronic ballast	135	96	12.96	8,760	113,530	135	RL080/skit/s - (1) LED 80w linear strip retrofit kit, 50,000 hour life at L70 oemb	66	8.91	3,504	31,221	4.05	82,309
Rf#-23 Rm - Parking	1x4 2L strip, F32T8 28w, electronic ballast	5	48	0.24	8,760	2,102	5	RL040/skit/s - (1) LED 40w linear strip retrofit kit, 50,000 hour life at L70 oemb	33	0.165	3,504	578	0.075	1,524
4th Floor														
Rf#-24 Rm - Ramp	1x8 4L strip, F32T8 28w, electronic ballast	10	96	0.96	8,760	8,410	10	RL080/skit/s - (1) LED 80w linear strip retrofit kit, 50,000 hour life at L70 oemb	66	0.66	3,504	2,313	0.3	6,097
Rf#-25 Rm - Parking	1x8 4L strip, F32T8 28w, electronic ballast	60	96	5.76	8,760	50,458	60	RL080/skit/s - (1) LED 80w linear strip retrofit kit, 50,000 hour life at L70 oemb	66	3.96	3,504	13,876	1.8	36,582
Rf#-26 Rm - Parking	1x4 2L strip, F32T8 28w, electronic ballast	5	48	0.24	8,760	2,102	5	RL040/skit/s - (1) LED 40w linear strip retrofit kit, 50,000 hour life at L70 oemb	33	0.165	3,504	578	0.075	1,524
Qty and kW for Montage / Gardens Parking Structure :		**540**		**44.5**			**540**			**30.0**			**14.5**	
	kWh for Montage / Gardens Parking Structure :					**390,100**						**107,173**		**282,921**

W* = wall switch sensor; C* = ceiling sensor; E* = existing sensor, L* Dimming Control

City of Beverly Hills - Lighting Detail Report

(sorted by building, floor, area)

CLIMATEC
BUILDING TECHNOLOGIES GROUP

Police Dept. -

PRE-RETROFIT							POST RETROFIT							
Location	Existing Fixture Description	Qty	Wt/Fxt	kW	Hours	kWh	Qty	Retrofit Code Description (Sensor in RED)	Wt/Fxt	kW	Hours	kWh	kW Svd	kWh Svd
Building/Area: Main Building														
1st Floor														
Rf#-3 Rm - hallway	1x4x 2L cove light, F32T8 32w, electronic ballast	7	59	0.413	8,760	3,618	7	RL040/tkit - (1) LED 40w linear recessed troffer retrofit kit, 50,000 hour life at L70	33	0.231	8,760	2,024	0.182	1,594
Rf#-4 Rm - hallway	2x4x 2L rec trf, F32T8 32w, electronic ballast	24	59	1.416	8,760	12,404	24	RL040/tkit - (1) LED 40w linear recessed troffer retrofit kit, 50,000 hour life at L70	33	0.792	8,760	6,938	0.624	5,466
Rf#-5 Rm - hallway	MH 1L rec can, MH 100w, HID ballast	1	130	0.13	8,760	1,139	1	RL025/kit - (1) LED 25w retrofit kit, 50,000 hour life at L70	25	0.025	8,760	219	0.105	920
Rf#-6 Rm - Lunch room	2x4x 2L rec trf, F32T8 32w, electronic ballast	4	59	0.236	8,760	2,067	4	RL040/tkit - (1) LED 40w linear recessed troffer retrofit kit, 50,000 hour life at L70	33	0.132	8,760	1,156	0.104	911
Rf#-7 Rm - Roll Call	2x4x 2L rec trf, F32T8 32w, electronic ballast	10	59	0.59	8,760	5,168	10	RL040/tkit - (1) LED 40w linear recessed troffer retrofit kit, 50,000 hour life at L70	33	0.33	8,760	2,891	0.26	2,278
Rf#-8 Rm - physical fitness room	2x4x 2L rec trf, F32T8 32w, electronic ballast	15	59	0.885	8,760	7,753	15	RL040/tkit - (1) LED 40w linear recessed troffer retrofit kit, 50,000 hour life at L70	33	0.495	8,760	4,336	0.39	3,416
Rf#-9 Rm - stairwell	MH 1L wm square, MH 100w, HID ballast	3	130	0.39	8,760	3,416	3	NL040/4wp/s - New LED surface mounted radial wrap, 4' (1) LED dimming driver, on board occupancy oemb	40	0.12	3,504	420	0.27	2,996
2nd Floor														
Rf#-10 Rm - hallway	2x4x 2L rec trf, F32T8 32w, electronic ballast	16	59	0.944	8,760	8,269	16	RL040/tkit - (1) LED 40w linear recessed troffer retrofit kit, 50,000 hour life at L70	33	0.528	8,760	4,625	0.416	3,644
3rd Floor														
Rf#-9 Rm - Columns around PD Courtyard	MH 1L flood, adj, MH 175w, HID ballast	14	215	3.01	4,380	13,184	14	NL020/wp/fc - New LED wall pack full cut off, 50,000 hour L70 rated life, 20w	20	0.28	4,380	1,226	2.73	11,957
Rf#-11 Rm - hallway	2x4x 2L rec trf, F32T8 32w, electronic ballast	15	59	0.885	8,760	7,753	15	RL040/tkit - (1) LED 40w linear recessed troffer retrofit kit, 50,000 hour life at L70	33	0.495	8,760	4,336	0.39	3,416
Rf#-12 Rm - hallway (stairwell)	MH 1L rec can, MH 100w, HID ballast	1	130	0.13	8,760	1,139	1	RL025/kit - (1) LED 25w retrofit kit, 50,000 hour life at L70	25	0.025	8,760	219	0.105	920
Rf#-12 Rm - hallway (stairwell)	MH 1L rec can, MH 100w, HID ballast	1	130	0.13	8,760	1,139	1	RL025/kit - (1) LED 25w retrofit kit, 50,000 hour life at L70	25	0.025	8,760	219	0.105	920
Lower Level														
Rf#-1 Rm - Chiller Equipent Room	MH 1L pm high bay, MH 400w, HID ballast	4	458	1.832	3,500	6,412	4	NL240/hb - New LED area interior high bay, 75,000 hour L70 rated life, 240w	240	0.96	3,500	3,360	0.872	3,052
Rf#-2 Rm - Parking (underground)	1x8x 2L sm strip, F32T8 32w, electronic ballast	137	59	8.083	8,760	70,807	137	RL040/skit/s - (1) LED 40w linear strip retrofit kit, 50,000 hour life at L70 oemb	33	4.521	3,504	15,842	3.562	54,965
Rf#-10 Rm - underpass Rexford to parking garage	HPS 1L rec can, HPS 70w, HID ballast	4	95	0.38	4,380	1,664	4	RL025/kit - (1) LED 25w retrofit kit, 50,000 hour life at L70	25	0.1	4,380	438	0.28	1,226
	Qty and kW for Police Dept. :	**256**		**19.5**			**256**			**9.1**			**10.4**	
	kWh for Police Dept. :					**145,933**						**48,249**		**97,681**

W* = wall switch sensor; C* = ceiling sensor; E* = existing sensor, L* Dimming Control

City of Beverly Hills - Lighting Detail Report

(sorted by building, floor, area)

CLIMATEC
BUILDING TECHNOLOGIES GROUP

Public Works Facility -

PRE-RETROFIT							POST RETROFIT							
Location	Existing Fixture Description	Qty	Wt/Fxt	kW	Hours	kWh	Qty	Retrofit Code Description (Sensor in RED)	Wt/Fxt	kW	Hours	kWh	kW Svd	kWh Svd
Building/Area: Vehicle Building														
All														
Rf#-5 Rm - Shop Floor	MH 1L pm high bay, MH 400w, HID ballast	42	458	19.24	3,500	67,326	42	NL240/hb - New LED area interior high bay, 75,000 hour L70 rated life, 240w	240	10.08	3,500	35,280	9.156	32,046
Rf#-6 Rm - Central Storage	MH 1L pm high bay, MH 400w, HID ballast	7	458	3.206	3,500	11,221	7	NL240/hb - New LED area interior high bay, 75,000 hour L70 rated life, 240w	240	1.68	3,500	5,880	1.526	5,341
Rf#-7 Rm - Mezzanine in above room	MH 1L pm low bay, MH 400w, HID ballast	6	458	2.748	3,500	9,618	6	NL240/hb - New LED area interior high bay, 75,000 hour L70 rated life, 240w	240	1.44	3,500	5,040	1.308	4,578
Rf#-8 Rm - Tire Storage	MH 1L pm high bay, MH 400w, HID ballast	4	458	1.832	3,500	6,412	4	NL240/hb - New LED area interior high bay, 75,000 hour L70 rated life, 240w	240	0.96	3,500	3,360	0.872	3,052
Rf#-9 Rm - Shop Bay Area #2	MH 1L pm high bay, MH 400w, HID ballast	8	458	3.664	3,500	12,824	8	NL240/hb - New LED area interior high bay, 75,000 hour L70 rated life, 240w	240	1.92	3,500	6,720	1.744	6,104
Rf#-10 Rm - Gas pump Canopy	MH 1L rec square (drop lens), MH 400w, HID ballast	6	458	2.748	4,380	12,036	6	NL200/sm - New LED canopy fixture, 75,000 hour L70 rated life, 240w	200	1.2	4,380	5,256	1.548	6,780
Building/Area: Water Building														
All														
Rf#-1 Rm - Ext-Bldg Mounted	MH 1L wm wall pack FCO (director), MH 100w, HID ballast	10	130	1.3	4,380	5,694	10	NL020/wp/fc - New LED wall pack full cut off, 50,000 hour L70 rated life, 20w	20	0.2	4,380	876	1.1	4,818
Rf#-2 Rm - Ext-Pole Mounted (northend	MH 1L wm shoe box, MH 250w, HID ballast	3	295	0.885	4,380	3,876	3	NL060/p8e - New LED area light pole mount, 60,000+ hour L70 rated life, 60w	60	0.18	4,380	788	0.705	3,088
Rf#-3 Rm - Ext-Pole Mounted (westside	MH 1L gullwing , MH 250w, HID ballast	5	295	1.475	4,380	6,461	5	NL060/p8e - New LED area light pole mount, 60,000+ hour L70 rated life, 60w	60	0.3	4,380	1,314	1.175	5,146
Rf#-4 Rm - All Interior Space	DND (do not do, left as is), n/a, n/a		0	0	3,000	0	0	DND - DND: (do not do, fixtures left as is)	0	0	3,000	0	0	0
Qty and kW for Public Works Facility :		**91**		**37.1**			**91**			**18.0**			**19.1**	
kWh for Public Works Facility :						**135,468**						**64,514**		**70,953**

W* = wall switch sensor; C* = ceiling sensor; E* = existing sensor, L* Dimming Control

City of Beverly Hills - Lighting Detail Report

(sorted by building, floor, area)

CLIMATEC BUILDING TECHNOLOGIES GROUP

Santa Monica 5's Parking Structure -

PRE-RETROFIT							POST RETROFIT							
Location	Existing Fixture Description	Qty	Wt/Fxt	kW	Hours	kWh	Qty	Retrofit Code Description (Sensor in RED)	Wt/Fxt	kW	Hours	kWh	kW Svd	kWh Svd
Building/Area: SM1-West of Beverly														
1st Floor														
Rf#-5 Rm - Lower Parking	1x4x 2L sm vapor tight, F32T8 32w, electronic ballast	22	59	1.298	8,760	11,370	22	NL040/4wp/s - New LED surface mounted radial wrap, 4' (1) LED dimming driver, on board occupancy cmb	40	0.88	3,504	3,084	0.418	8,287
Rf#-6 Rm - Lower Parking	CF 1L wm wal pack, CFL 26w, CFL ballast	2	30	0.06	4,380	263	2	DND - DND: (do not do, fixtures left as is)	30	0.06	4,380	263	0	0
2nd Floor														
Rf#-1 Rm - Upper Parking	MH 1L shoe box, SqP, DB, MH 250w, HID ballast	4	295	1.18	4,380	5,168	4	NL060/p8e - New LED area light pole mount, 60,000+ hour L70 rated life, 60w	60	0.24	4,380	1,051	0.94	4,117
Rf#-2 Rm - Upper Parking	LED 1L wm wall washer, LED 7w, n/a	17	7	0.119	4,380	521	17	DND - DND: (do not do, fixtures left as is)	7	0.119	4,380	521	0	0
Rf#-3 Rm - Upper Parking	MH 1L post top bollard gumdrop, MH 70w, HID ballast	3	95	0.285	4,380	1,248	3	NL040/4wp/s - New LED surface mounted radial wrap, 4' (1) LED dimming driver, on board occupancy cmb	40	0.12	1,752	210	0.165	1,038
Rf#-4 Rm - Upper Parking	Inc. 2L wm sconce, Inc. 30w, n/a	12	60	0.72	4,380	3,154	12	RL051/s - (1) LED 5w screw in lamp	5	0.06	4,380	263	0.66	2,891
Building/Area: SM2-West of Rodeo														
1st Floor														
Rf#-11 Rm - Lower Parking	1x4x 2L sm vapor tight, F32T8 32w, electronic ballast	17	59	1.003	8,760	8,786	17	NL040/4wp/s - New LED surface mounted radial wrap, 4' (1) LED dimming driver, on board occupancy cmb	40	0.68	3,504	2,383	0.323	6,404
Rf#-12 Rm - Lower Parking	CF 1L wm wal pack, CFL 26w, CFL ballast	2	30	0.06	4,380	263	2	DND - DND: (do not do, fixtures left as is)	30	0.06	4,380	263	0	0
2nd Floor														
Rf#-7 Rm - Upper Parking	MH 1L shoe box, SqP, DB, MH 250w, HID ballast	4	295	1.18	4,380	5,168	4	NL060/p8e - New LED area light pole mount, 60,000+ hour L70 rated life, 60w	60	0.24	4,380	1,051	0.94	4,117
Rf#-8 Rm - Upper Parking	LED 1L wm wall washer, LED 7w, n/a	17	7	0.119	4,380	521	17	DND - DND: (do not do, fixtures left as is)	7	0.119	4,380	521	0	0
Rf#-9 Rm - Upper Parking	MH 1L post top bollard gumdrop, MH 70w, HID ballast	3	95	0.285	4,380	1,248	3	NL040/4wp/s - New LED surface mounted radial wrap, 4' (1) LED dimming driver, on board occupancy cmb	40	0.12	1,752	210	0.165	1,038
Rf#-10 Rm - Upper Parking	Inc. 2L wm sconce, Inc. 30w, n/a	12	60	0.72	4,380	3,154	12	RL051/s - (1) LED 5w screw in lamp	5	0.06	4,380	263	0.66	2,891
Building/Area: SM3-West of Camden														
1st Floor														
Rf#-17 Rm - Lower Parking	1x4x 2L sm vapor tight, F32T8 32w, electronic ballast	17	59	1.003	8,760	8,786	17	NL040/4wp/s - New LED surface mounted radial wrap, 4' (1) LED dimming driver, on board occupancy cmb	40	0.68	3,504	2,383	0.323	6,404
Rf#-18 Rm - Lower Parking	CF 1L wm wal pack, CFL 26w, CFL ballast	2	30	0.06	4,380	263	2	DND - DND: (do not do, fixtures left as is)	30	0.06	4,380	263	0	0
2nd Floor														
Rf#-13 Rm - Upper Parking	MH 1L shoe box, SqP, DB, MH 250w, HID ballast	4	295	1.18	4,380	5,168	4	NL060/p8e - New LED area light pole mount, 60,000+ hour L70 rated life, 60w	60	0.24	4,380	1,051	0.94	4,117
Rf#-14 Rm - Upper Parking	LED 1L wm wall washer, LED 7w, n/a	17	7	0.119	4,380	521	17	DND - DND: (do not do, fixtures left as is)	7	0.119	4,380	521	0	0

W* = wall switch sensor; C* = ceiling sensor; E* = existing sensor, L* Dimming Control

City of Beverly Hills - Lighting Detail Report

(sorted by building, floor, area)

CLIMATEC BUILDING TECHNOLOGIES GROUP

Santa Monica 5's Parking Structure -

PRE-RETROFIT							POST RETROFIT							
Location	Existing Fixture Description	Qty	Wt/Fxt	kW	Hours	kWh	Qty	Retrofit Code Description (Sensor in RED)	Wt/Fxt	kW	Hours	kWh	kW Svd	kWh Svd
Rf#-15 Rm - Upper Parking	MH 1L post top bollard gumdrop, MH 70w, HID ballast	3	95	0.285	4,380	1,248	3	NL040/4wp/s - New LED surface mounted radial wrap, 4' (1) LED dimming driver, on board occupancy	40	0.12	1,752	210	0.165	1,038
Rf#-16 Rm - Upper Parking	Inc. 2L wm sconce, Inc. 30w, n/a	12	60	0.72	4,380	3,154	12	RL051/s - (1) LED 5w screw in lamp	5	0.06	4,380	263	0.66	2,891
Building/Area: SM4-West of Bedford														
1st Floor														
Rf#-23 Rm - Lower Parking	1x4x 2L sm vapor tight, F32T8 32w, electronic ballast	15	59	0.885	8,760	7,753	15	NL040/4wp/s - New LED surface mounted radial wrap, 4' (1) LED dimming driver, on board occupancy	40	0.6	3,504	2,102	0.285	5,650
Rf#-24 Rm - Lower Parking	CF 1L wm wal pack, CFL 26w, CFL ballast	2	30	0.06	4,380	263	2	DND - DND: (do not do, fixtures left as is)	30	0.06	4,380	263	0	0
2nd Floor														
Rf#-19 Rm - Upper Parking	MH 1L shoe box, SqP, DB, MH 250w, HID ballast	4	295	1.18	4,380	5,168	4	NL060/p8e - New LED area light pole mount, 60,000+ hour L70 rated life, 60w	60	0.24	4,380	1,051	0.94	4,117
Rf#-20 Rm - Upper Parking	LED 1L wm wall washer, LED 7w, n/a	17	7	0.119	4,380	521	17	DND - DND: (do not do, fixtures left as is)	7	0.119	4,380	521	0	0
Rf#-21 Rm - Upper Parking	MH 1L post top bollard gumdrop, MH 70w, HID ballast	4	95	0.38	4,380	1,664	4	NL040/4wp/s - New LED surface mounted radial wrap, 4' (1) LED dimming driver, on board occupancy	40	0.16	1,752	280	0.22	1,384
Rf#-22 Rm - Upper Parking	Inc. 2L wm sconce, Inc. 30w, n/a	12	60	0.72	4,380	3,154	12	RL051/s - (1) LED 5w screw in lamp	5	0.06	4,380	263	0.66	2,891
Building/Area: SM5-West of Roxbury														
1st Floor														
Rf#-29 Rm - Lower Parking	1x4x 2L sm vapor tight, F32T8 32w, electronic ballast	22	59	1.298	8,760	11,370	22	NL040/4wp/s - New LED surface mounted radial wrap, 4' (1) LED dimming driver, on board occupancy	40	0.88	3,504	3,084	0.418	8,287
Rf#-30 Rm - Lower Parking	CF 1L wm wal pack, CFL 26w, CFL ballast	2	30	0.06	4,380	263	2	DND - DND: (do not do, fixtures left as is)	30	0.06	4,380	263	0	0
2nd Floor														
Rf#-25 Rm - Upper Parking	MH 1L shoe box, SqP, DB, MH 250w, HID ballast	6	295	1.77	4,380	7,753	6	NL060/p8e - New LED area light pole mount, 60,000+ hour L70 rated life, 60w	60	0.36	4,380	1,577	1.41	6,176
Rf#-26 Rm - Upper Parking	LED 1L wm wall washer, LED 7w, n/a	17	7	0.119	4,380	521	17	DND - DND: (do not do, fixtures left as is)	7	0.119	4,380	521	0	0
Rf#-27 Rm - Upper Parking	MH 1L post top bollard gumdrop, MH 70w, HID ballast	3	95	0.285	4,380	1,248	3	NL040/4wp/s - New LED surface mounted radial wrap, 4' (1) LED dimming driver, on board occupancy	40	0.12	1,752	210	0.165	1,038
Rf#-28 Rm - Upper Parking	Inc. 2L wm sconce, Inc. 30w, n/a	12	60	0.72	4,380	3,154	12	RL051/s - (1) LED 5w screw in lamp	5	0.06	4,380	263	0.66	2,891
Qty and kW for Santa Monica 5's Parking Structure :		**286**		**18.0**			**286**			**6.9**			**11.1**	
kWh for Santa Monica 5's Parking Structure :						**102,838**						**25,172**		**77,667**

W* = wall switch sensor; C* = ceiling sensor; E* = existing sensor, L* Dimming Control

City of Beverly Hills - Lighting Detail Report

(sorted by building, floor, area)

CLIMATEC
BUILDING TECHNOLOGIES GROUP

Will Rogers Park -

PRE-RETROFIT							POST RETROFIT							
Location	Existing Fixture Description	Qty	Wt/Fxt	kW	Hours	kWh	Qty	Retrofit Code Description (Sensor in RED)	Wt/Fxt	kW	Hours	kWh	kW Svd	kWh Svd
Building/Area: Park														
1st Floor														
Rf#-1 Rm - Pathways	MH 1L post top globe, MH 175w, HID ballast	40	215	8.6	4,380	37,668	40	RL045/s - (1) LED 45w screw in lamp multivolt driver	45	1.8	4,380	7,884	6.8	29,784
Rf#-2 Rm - MRR	CF 2L wm square (dome lens), CFL 26w, CFL ballast	3	60	0.18	600	108	3	RL025/kit - (1) LED 25w retrofit kit, 50,000 hour life at L70	25	0.075	600	45	0.105	63
Rf#-3 Rm - WRR	CF 2L wm square (dome lens), CFL 26w, CFL ballast	3	60	0.18	600	108	3	RL025/kit - (1) LED 25w retrofit kit, 50,000 hour life at L70	25	0.075	600	45	0.105	63
Rf#-4 Rm - RR Exterior	CF 2L wm square (dome lens), CFL 26w, CFL ballast	2	60	0.12	4,380	526	2	RL025/kit - (1) LED 25w retrofit kit, 50,000 hour life at L70	25	0.05	4,380	219	0.07	307
Qty and kW for Will Rogers Park :		**48**		**9.1**			**48**			**2.0**			**7.1**	
kWh for Will Rogers Park :						**38,410**						**8,193**		**30,217**

W* = wall switch sensor; C* = ceiling sensor; E* = existing sensor, L* Dimming Control

Mechanical Equipment Schedule

La Cienega Tennis Center - HVAC Replacement Inventory

	Existing Equipment							Proposed Equipment				
Equipment	Manuf.	Model No.	Serial No.	Capactiy / Size	Year	Electrical	*Additional Notes*	Manuf.	Model No.	Capacity (tons)	Min EER / SEER	Electrical
Split Sys Heat Pump	Carrier	24ABB330W310	2710E02127	2	2010	208/230V-1ph						
Split Sys Heat Pump	Carrier	24ABB330W310		2	2010	208/230V-1ph						
Split Sys Heat Pump	Trane	4TWB3024C1000AA	12312H0E4F	2	2012	208/230V-1ph						
Split Sys Heat Pump	ICP	N4H324AKE100	E111013150	2	2011	208/230V-1ph						
Split Sys Heat Pump	York	E2HB060S06A	MNWM596936	5	1989	208/230V-1ph	*Replace*	Carrier	25VNA060	5	17 SEER	208/230V-1ph
Split Sys Heat Pump	York	HP060X1021A	WCNM056332	5	1983	208/230V-1ph	*Replace*	Carrier	25VNA060	5	17 SEER	208/230V-1ph
Split Sys Heat Pump	York	HP024X1021A	WMMM036280	2	1982	208/230V-1ph	*Replace*	Carrier	25HBC524	2	14 SEER	208/230V-1ph
Split Sys Heat Pump	York	E2CS024A06A	MKWM457923	2	1989	208/230V-1ph	*Replace*	Carrier	25HBC524	2	14 SEER	208/230V-1ph
Split Sys Heat Pump	York	E2CS024A06A	MKWM457950	2	1989	208/230V-1ph	*Replace*	Carrier	25HBC524	2	14 SEER	208/230V-1ph
Split Sys Heat Pump	York	E2CS024A06A	MKWM457949	2	1989	208/230V-1ph	*Replace*	Carrier	25HBC524	2	14 SEER	208/230V-1ph

Technical Appendix

Carbon Monoxide (CO) Detecting Ventilation Fan Controller

Save lives, money and energy

by activating ventilation systems only when needed.

Installing a COSTAR® 24VC-e CO Ventilation Fan Controller (VC) will save you all three, while adhering to the strictest NIOSH requirements. 12 year end of life.

Model 24VC-e

Industrial Applications

Parking Garages (underground or enclosed)
Warehouses, Service Bays, Tunnels, Factories,
Aircraft Hangars, Fire Stations and More...

Listings and Approvals

Listing Pending
NIOSH Compliant

2 Year Limited Warranty

Special Features

Monitors up to 10,000 ft^2
Easy Installation - No Field Calibration
Temperature Compensation

Warranty Backed by U.S. Manufacturer

2 Year Limited Warranty on Detector
2 Year Limited Warranty on Replaceable Sensor
5 Year Limited Warranty on Steel Case

COSTAR®
VC Series

COSTAR®
VC Series

Model 24VC-e
CO Detecting Ventillation Fan Controller

Model 24VC-e
#905-0000-09

- 24 VAC at 60 Hz, 0.08A
- 16 Gauge Galvanized Steel with hinged, lockable cover, ETL Listed
- 5 A Relay
- ~6"w x ~8"h x ~4"d
- 6 lbs

Temperature and Humidity: Minus 20°C to 55°C (- 4°F to 131°F)
7.5% to 95% Relative Humidity

Fan Level: Turns on with CO at 25 PPM within 30 minutes

Alarm Level: CO at 150 PPM within 15 minutes

Alarm Reset: Automatic reset in clean air

Sensor Life: 3 Year replacement sensor (part # 905-0001-04)

Sensor Technology: Electrochemical

Relay Contact: Single pole, normally open

Power Requirements: Relay off (fan on), 40 milliamps at 24 volts ~1.00 Watt
Relay on (fan off), 60 milliamps ~ 1.44 watts

Sound Output (Alarm): 85 dB piezo-alarm from 3 meters (10 ft)

2 Year Limited Warranty

ETL Listed Intertek

QUANTUM GROUP INC.
6827 Nancy Ridge Drive San Diego, CA 92121-2233 USA
Phone: (858) 566-9959, Fax: (858) 566-9974, Toll Free: (800) 432-5599
Web: www.QGinc.com, www.PRO.QGinc.com
Email: cs@QGinc.com

SUBMITTAL

Project

Climatec Energy - La Cienega Tennis Center

Table Of Contents

Project: Climatec Energy - La Cienega Tennis Center 05/13/2015
Prepared By:

5T Split HP **3**
Unit Report 4
Performance Summary 5
System Parameters 5
Electrical Data 5
Acoustic Summary 6
Certified Drawing 7
2T Split HP **11**
Unit Report 12
Performance Summary 13
System Parameters 13
Electrical Data 13
Acoustic Summary 14
Certified Drawing 15
5T Split HP Option 2 **19**
Unit Report 20
Performance Summary 21
System Parameters 21
Electrical Data 21
Acoustic Summary 22
Certified Drawing 23

5T Split HP

Submittal Cover Sheet
Unit Report
Performance Summary Report
Acoustic Summary
Certified Drawings

Unit Report For 5T Split HP

Project: Climatec Energy - La Cienega Tennis Center 05/13/2015
Prepared By:

Outdoor Unit Parameters

Unit Model:	**25VNA**	
Unit Size:	**5 Tons**	
Voltage:	**208/230-1-60**	V-Ph-Hz

Indoor Unit Parameters

Unit Model:	**FE4A**	
Unit Size:	**36-60,000 Btuh**	
Cabinet Insulation:	**Modular cabinet**	
Voltage:	**208/230-1-60**	V-Ph-Hz
Heating Size:	**No Heat**	

Outdoor Unit Dimensions and Weight

Unit Length:	**31.1875**	in
Unit Width:	**31.1875**	in
Unit Height:	**43.1875**	in
Unit Shipping Weight:	**286.**	lb

Indoor Unit Dimensions and Weight

Unit Length:	**22.0625**	in
Unit Width:	**24.6875**	in
Unit Height:	**53.4375**	in
Unit Shipping Weight:	**207.**	lb

Limited Warranty (Years)		
Item	**Original Owner**	**Subsequent Owner**
Parts	10* (or 5)	5

***When registered within 90 days of installation to the original owner.**

Ordering Information

Part Number	Description	Quantity
Outdoor Unit		
25VNA860A003	25VNA Infinity Varible Speed Heat Pump 5 Tons Cooling	1
	18 SEER @ ARI Conditions	1
Accessories		
SYSTXCCITC01-A	Infinity Touch Wi-Fi Control for Outdoor Unit	1
Indoor Unit		
FE4ANB006L00	Infinity Series Fan Coil with Puron 6 Tons Cooling	1
	Modular cabinet	1
	Aluminum	1

The Product and Ratings Data in this program is subject to change at any time and without notice. Please refer to the latest product literature and the AHRI directory at www.ahridirectory.org for the most up-to-date information.

Performance Summary For 5T Split HP

Project: Climatec Energy - La Cienega Tennis Center 05/13/2015
Prepared By:

System Performance

System:	**25VNA/FE4A**	
System Quantity:	**1**	
Altitude:	**0.0**	ft
Linear Pipe Length:	**0.0**	ft
COP @ 47 F:	**3.10**	
COP @ 17 F:	**2.48**	
SEER @ ARI Conditions:	**17.0**	
EER @ ARI Conditions:	**10.0**	
HSPF @ ARI Conditions:	**10.0**	

Actual Airflow:	**1600.0**	CFM
Standard Airflow:	**1600.0**	CFM
Total Net Clg Capacity:	**56.50**	MBH
Net Sensible Clg Capacity:	**39.99**	MBH
Htg HP Capacity:	**73.27**	MBH
Htg HP Integrated Capacity:	**73.27**	MBH
Heating HP Compressor Power:	**7.50**	kW
Total System Power:	**5.65**	kW

System Parameters

Outdoor Unit Parameters

Unit Model:	**25VNA860A003**	
Unit Size (Nominal):	**5 Tons**	
Voltage:	**208/230-1-60**	V-Ph-Hz
Htg Ent Air DB:	**70.0**	°F
Htg Lvg Air DB:	**112.4**	°F
Clg Ent Air DB Ambient:	**95.0**	°F
Htg Ent Air DB Ambient:	**47.0**	°F

Indoor Unit Parameters

Unit Model:	**FE4ANB006L00**	
Unit Size (Nominal):	**36-60,000 Btuh**	
Voltage:	**208/230-1-60**	V-Ph-Hz
Ent Air DB:	**80.00**	°F
Ent Air WB:	**67.00**	°F
Ent Enthalpy:	**31.44**	BTU/lb
Lvg Air DB:	**56.86**	°F
Lvg Air WB:	**55.71**	°F
Lvg Enthalpy:	**23.59**	BTU/lb
Heating Size (Nominal):	**No Heat**	
Indoor Unit External Static:	**0.50**	in wg

Electrical Data

Outdoor Electrical Data

Unit Voltage:	**208/230-1-60**	V-Ph-Hz
Fan Motor FLA:	**1.40**	Amps
MCA:	**40.8**	Amps
Max Fuse:	**60**	Amps
Operating Range Min:	**197**	V
Operating Range Max:	**253**	V
Compressor RLA:	**31.3**	Amps

Indoor Electrical Data:

(For units with no factory installed electric heaters)

Unit Voltage:	**208/230-1-60**	V-Ph-Hz
Unit FLA:	**6.8**	Amps
Unit MCA:	**8.5**	Amps
Unit Min Wire Size:	**14.0**	
Unit Fuse/Ckt Bkr Amps:	**15.0**	Amps
Motor HP:	**3/4**	HP

Notice: Indoor Elect. data is for 208/230-1-60 voltage

The Product and Ratings Data in this program is subject to change at any time and without notice. Please refer to the latest product literature and the AHRI directory at www.ahridirectory.org for the most up-to-date information.

Acoustic Summary For 5T Split HP

Project: Climatec Energy - La Cienega Tennis Center 05/13/2015
Prepared By:

Outdoor Unit Parameters:

Unit Model: **25VNA**
Unit Size: **5 Tons**
Variations: **Standard**

Octave Band Center Frequency, Hz	63	125	250	500	1k	2k	4k	8k	dBA
Sound Power,dB	0.0	39.0	48.0	46.5	45.5	39.5	36.5	35.5	
A-Weighted Sound Power, dBA									57.0

Indoor Unit Parameters:

Unit Model: **FE4A**
Unit Size: **36-60,000 Btuh**
Cabinet Insulation: **Modular cabinet**

Octave Band Center Frequency, Hz	63	125	250	500	1k	2k	4k	8k	dBA
Sound Power,dB	62.7	58.7	56.7	51.7	59.7	47.7	43.7	0.0	
A-Weighted Sound Power, dBA									0.0

The Product and Ratings Data in this program is subject to change at any time and without notice. Please refer to the latest product literature and the AHRI directory at www.ahridirectory.org for the most up-to-date information.

Certified Drawing For 5T Split HP

Project: Climatec Energy - La Cienega Tennis Center
Prepared By:

05/13/2015

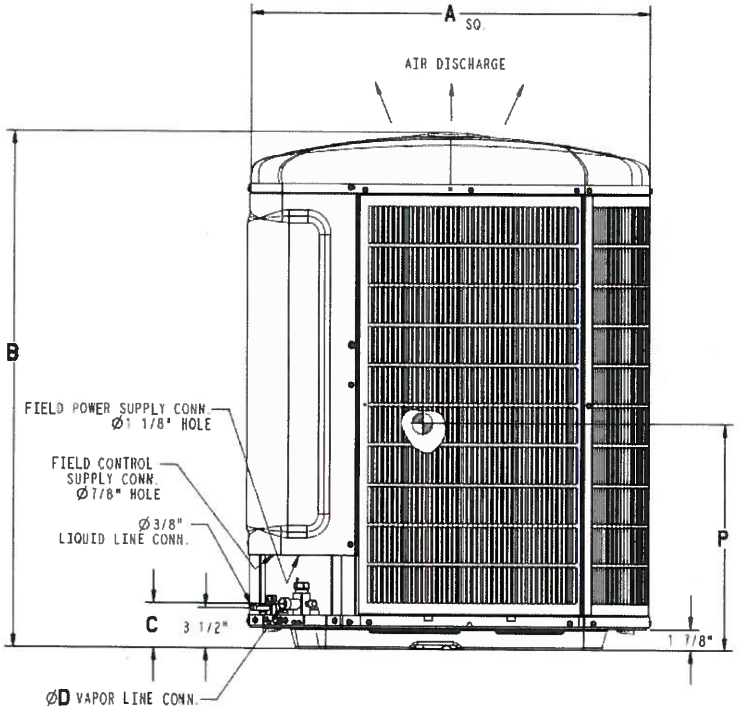

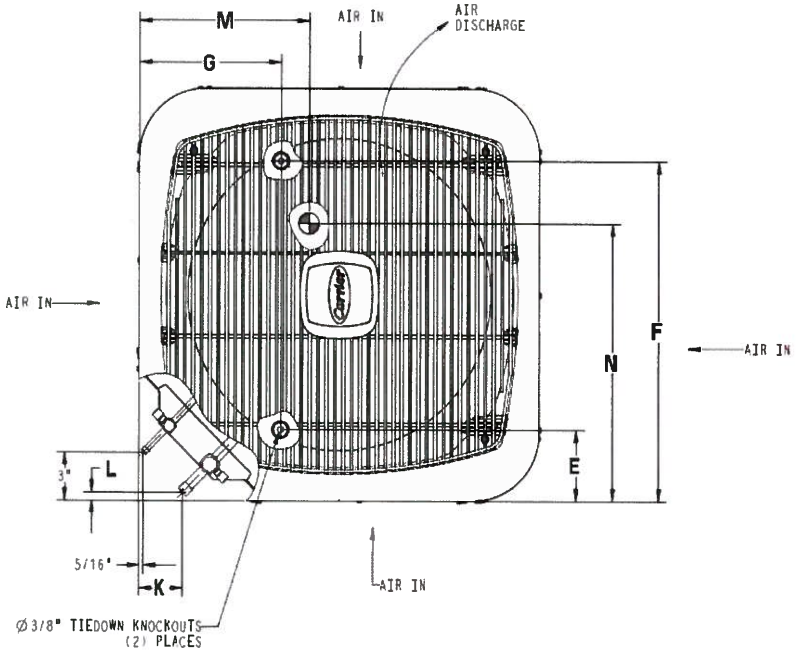

Outdoor Model

Unit Model:	**25VNA**	
Unit Size:	**5 Tons**	
Voltage:	**208/230-1-60**	V-Ph-Hz
SEER:	**18**	
PartNumber:	**25VNA860A003**	

Shipping Dimensions and Weights	Outdoor Unit
Height	49.56 in
Width	33.38 in
Length	33.38 in
Operating Weight	245. lb
Shipping Weight	286. lb

Dimensions											
A	B	C	D	E	F	G	K	L	M	N	P
31.19 in	43.19 in	3.88 in	0.88 in	6.56 in	24.69 in	9.13 in	2.94 in	0.63 in	16.50 in	15.00 in	20.00 in

The Product and Ratings Data in this program is subject to change at any time and without notice. Please refer to the latest product literature and the AHRI directory at www.ahridirectory.org for the most up-to-date information.

Certified Drawing For 5T Split HP

Project: Climatec Energy - La Cienega Tennis Center
Prepared By:

05/13/2015

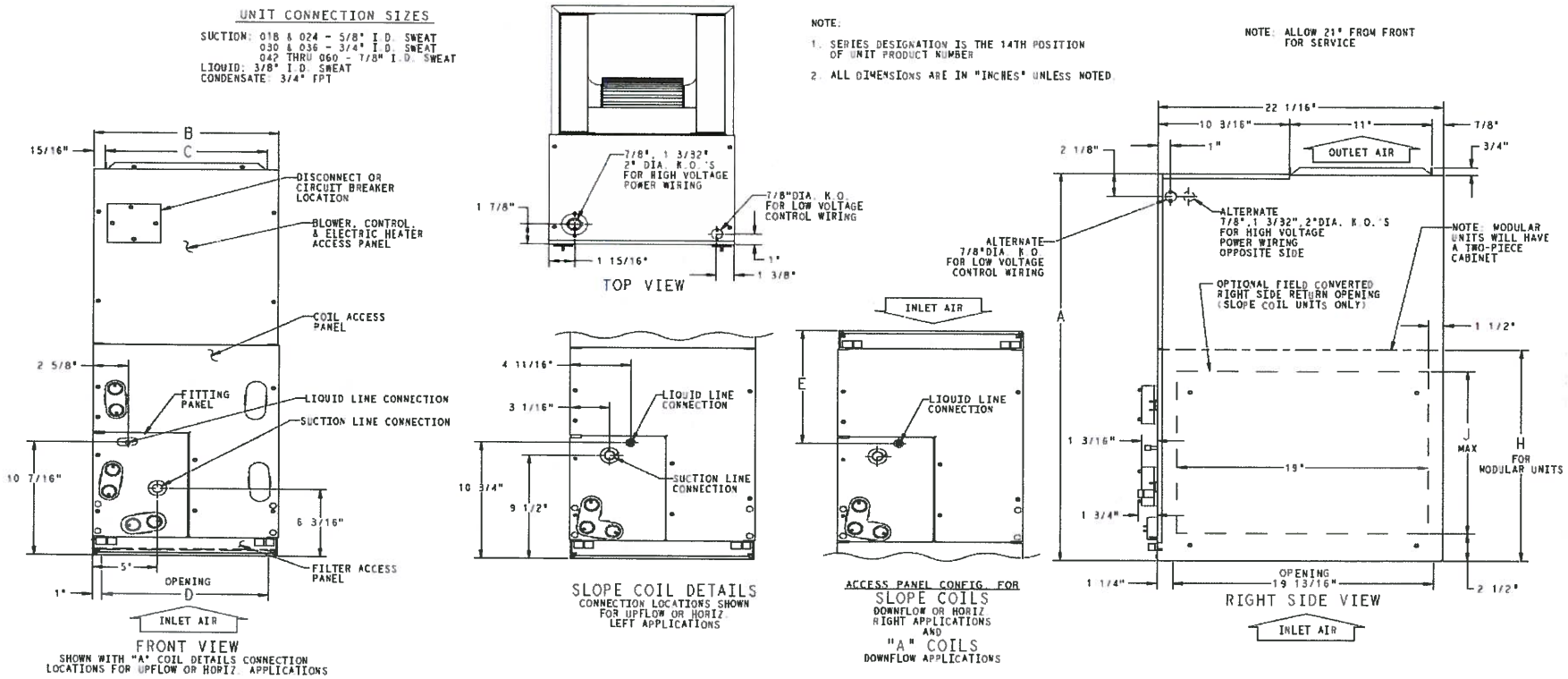

Indoor Model

Unit Model: **FE4A**
Unit Size: **36-60,000 Btuh**
Voltage: **208/230-1-60** V-Ph-Hz
Cabinet Insulation: **Modular cabinet**

Dimensions and Weights	Indoor Unit
Height	59.19 in
Width	24.69 in
Length	22.06 in
Shipping Weight	207. lb

Dimensions								
A	B	C	D	E	F	G	H	J
53.44 in	24.69 in	22.75 in	22.69 in	25.25 in	32.94 in	32.63 in	34.06 in	--

The Product and Ratings Data in this program is subject to change at any time and without notice. Please refer to the latest product literature and the AHRI directory at www.ahridirectory.org for the most up-to-date information.

Certified Drawing For 5T Split HP

Project: Climatec Energy - La Cienega Tennis Center
Prepared By:

05/13/2015

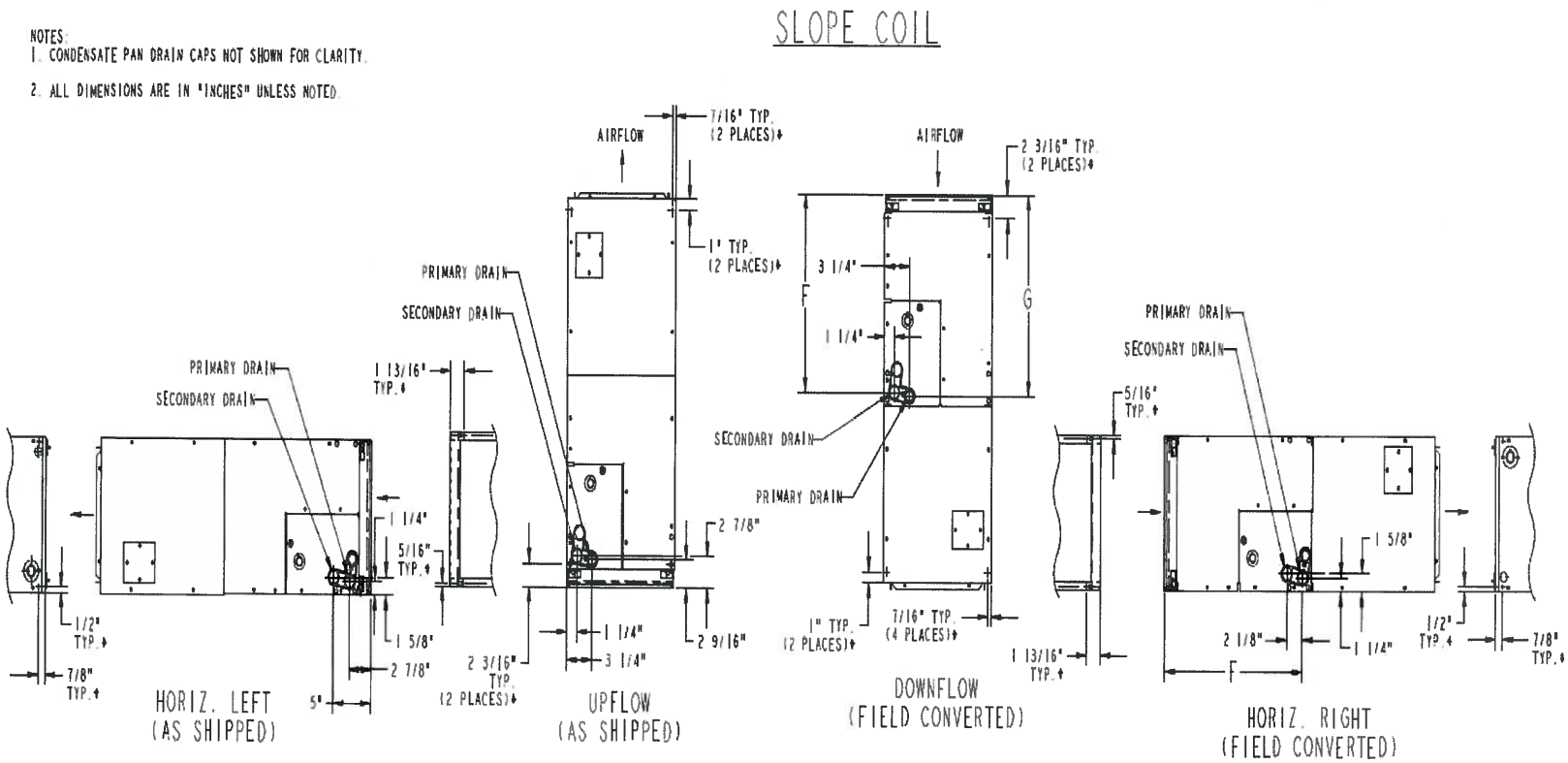

Indoor Model

Unit Model:	**FE4A**
Unit Size:	**36-60,000 Btuh**
Voltage:	**208/230-1-60** V-Ph-Hz

The Product and Ratings Data in this program is subject to change at any time and without notice. Please refer to the latest product literature and the AHRI directory at www.ahridirectory.org for the most up-to-date information.

Certified Drawing For 5T Split HP

Project: Climatec Energy - La Cienega Tennis Center
Prepared By:

05/13/2015

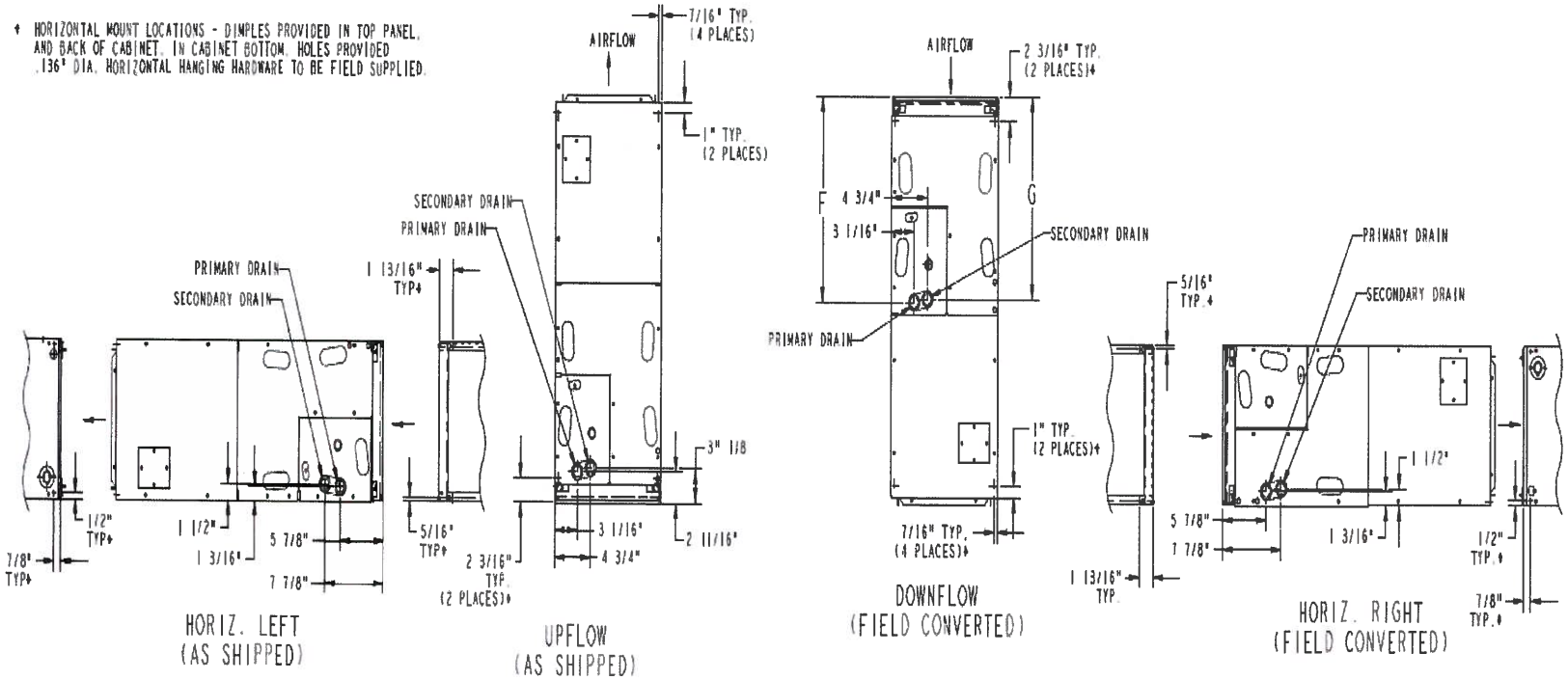

A-COIL

Indoor Model

Unit Model:	**FE4A**
Unit Size:	**36-60,000 Btuh**
Voltage:	**208/230-1-60** V-Ph-Hz

The Product and Ratings Data in this program is subject to change at any time and without notice. Please refer to the latest product literature and the AHRI directory at www.ahridirectory.org for the most up-to-date information.

2T Split HP

Submittal Cover Sheet
Unit Report
Performance Summary Report
Acoustic Summary
Certified Drawings

Unit Report For 2T Split HP

Project: Climatec Energy - La Cienega Tennis Center 05/13/2015
Prepared By:

Outdoor Unit Parameters

Unit Model: **25HCE**
Unit Size: **2 Tons**
Voltage: **208/230-1-60** V-Ph-Hz

Indoor Unit Parameters

Unit Model: **FX4D**
Unit Size: **24,000 Btuh**
Cabinet Insulation: **Single-piece cabinet with 1-in. super thick insulation**
Voltage: **208/230-1-60** V-Ph-Hz
Heating Size: **No Heat**

Outdoor Unit Dimensions and Weight

Unit Length: **25.75** in
Unit Width: **25.75** in
Unit Height: **35.25** in
Unit Shipping Weight: **175.** lb

Indoor Unit Dimensions and Weight

Unit Length: **22.0625** in
Unit Width: **17.625** in
Unit Height: **49.625** in
Unit Shipping Weight: **122.** lb

Limited Warranty (Years)		
Item	**Original Owner**	**Subsequent Owner**
Parts	10* (or 5)	5

***When registered within 90 days of installation to the original owner.**

Ordering Information

Part Number	Description	Quantity
Outdoor Unit		
25HCE424A003	Comfort Series Heat Pump with Puron 2 Tons Cooling	1
	14 SEER @ ARI Conditions	1
Indoor Unit		
FX4DNF025L00	FX4D Comfort Series Fan Coil with Puron 24000 BTU Cooling	1
	Single-piece cabinet with 1-in. super thick insulation	1
	Aluminum	1

The Product and Ratings Data in this program is subject to change at any time and without notice. Please refer to the latest product literature and the AHRI directory at www.ahridirectory.org for the most up-to-date information.

Performance Summary For 2T Split HP

Project: Climatec Energy - La Cienega Tennis Center 05/13/2015
Prepared By:

System Performance

System:	**25HCE/FX4D**	
System Quantity:	**1**	
Altitude:	**0.0**	ft
Linear Pipe Length:	**0.0**	ft
COP @ 47 F:	**3.88**	
COP @ 17 F:	**2.56**	
SEER @ ARI Conditions:	**14.0**	
EER @ ARI Conditions:	**11.5**	
HSPF @ ARI Conditions:	**8.2**	

Actual Airflow:	**800.0**	CFM
Standard Airflow:	**800.0**	CFM
Total Net Clg Capacity:	**21.98**	MBH
Net Sensible Clg Capacity:	**16.70**	MBH
Htg HP Capacity:	**21.76**	MBH
Htg HP Integrated Capacity:	**21.76**	MBH
Heating HP Compressor Power:	**1.87**	kW
Total System Power:	**1.91**	kW

System Parameters

Outdoor Unit Parameters

Unit Model:	**25HCE424A003**	
Unit Size (Nominal):	**2 Tons**	
Voltage:	**208/230-1-60**	V-Ph-Hz
Htg Ent Air DB:	**70.0**	°F
Htg Lvg Air DB:	**95.2**	°F
Clg Ent Air DB Ambient:	**95.0**	°F
Htg Ent Air DB Ambient:	**47.0**	°F

Indoor Unit Parameters

Unit Model:	**FX4DNF025L00**	
Unit Size (Nominal):	**24,000 Btuh**	
Voltage:	**208/230-1-60**	V-Ph-Hz
Ent Air DB:	**80.00**	°F
Ent Air WB:	**67.00**	°F
Ent Enthalpy:	**31.44**	BTU/lb
Lvg Air DB:	**60.67**	°F
Lvg Air WB:	**58.47**	°F
Lvg Enthalpy:	**25.33**	BTU/lb
Heating Size (Nominal):	**No Heat**	
Indoor Unit External Static:	**0.50**	in wg

Electrical Data

Outdoor Electrical Data

Unit Voltage:	**208/230-1-60**	V-Ph-Hz
Fan Motor FLA:	**0.60**	Amps
MCA:	**14.2**	Amps
Max Fuse:	**25**	Amps
Operating Range Min:	**197**	V
Operating Range Max:	**253**	V
Compressor RLA:	**10.9**	Amps
Compressor LRA:	**62.9**	Amps

Indoor Electrical Data:

(For units with no factory installed electric heaters)

Unit Voltage:	**208/230-1-60**	V-Ph-Hz
Unit FLA:	**2.8**	Amps
Unit MCA:	**3.5**	Amps
Unit MOCP:	**15.0**	Amps
Unit Min Wire Size:	**14.0**	
Motor HP:	**1/3**	HP

Notice: Indoor Elect. data is for 208/230-1-60 voltage

The Product and Ratings Data in this program is subject to change at any time and without notice. Please refer to the latest product literature and the AHRI directory at www.ahridirectory.org for the most up-to-date information.

Acoustic Summary For 2T Split HP

Project: Climatec Energy - La Cienega Tennis Center 05/13/2015
Prepared By:

Outdoor Unit Parameters:

Unit Model: **25HCE**
Unit Size: **2 Tons**
Variations: **Standard**

Octave Band Center Frequency, Hz	63	125	250	500	1k	2k	4k	8k	dBA
Sound Power,dB	0.0	46.0	56.0	59.0	63.0	63.0	60.0	55.0	
A-Weighted Sound Power, dBA									76.0

Indoor Unit Parameters:

Unit Model: **FX4D**
Unit Size: **24,000 Btuh**
Cabinet Insulation: **Single-piece cabinet with 1-in. super thick insulation**

Octave Band Center Frequency, Hz	63	125	250	500	1k	2k	4k	8k	dBA
Sound Power,dB	66.0	62.0	58.0	55.0	53.0	51.0	47.0	0.0	
A-Weighted Sound Power, dBA									0.0

The Product and Ratings Data in this program is subject to change at any time and without notice. Please refer to the latest product literature and the AHRI directory at www.ahridirectory.org for the most up-to-date information.

Certified Drawing For 2T Split HP

Project: Climatec Energy - La Cienega Tennis Center
Prepared By:

05/13/2015

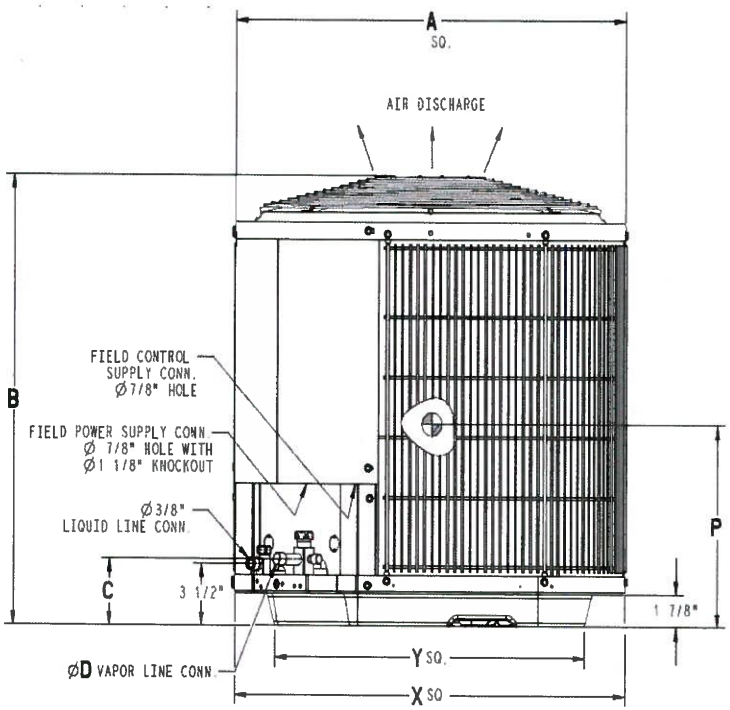

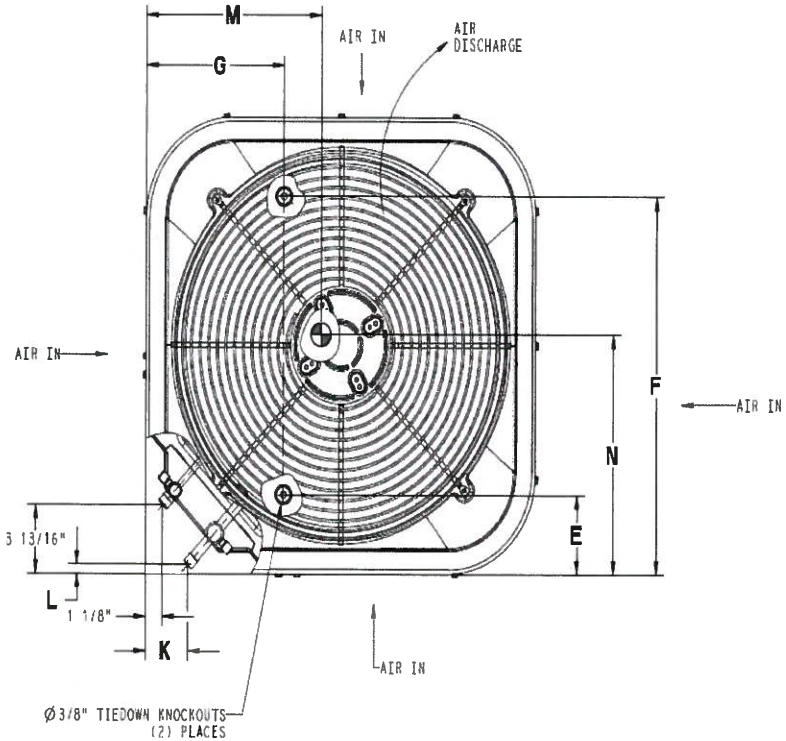

Outdoor Model

Unit Model:	**25HCE**	
Unit Size:	**2 Tons**	
Voltage:	**208/230-1-60**	V-Ph-Hz
SEER:	**14**	
PartNumber:	**25HCE424A003**	

Shipping Dimensions and Weights	Outdoor Unit
Height	40.00 in
Width	27.88 in
Length	27.88 in
Operating Weight	144. lb
Shipping Weight	175. lb

Dimensions											
A	B	C	D	E	F	G	K	L	M	N	P
25.75 in	35.25 in	3.75 in	0.63 in	4.44 in	21.25 in	9.13 in	2.81 in	0.50 in	12.00 in	13.25 in	13.50 in

The Product and Ratings Data in this program is subject to change at any time and without notice. Please refer to the latest product literature and the AHRI directory at www.ahridirectory.org for the most up-to-date information.

Certified Drawing For 2T Split HP

Project: Climatec Energy - La Cienega Tennis Center
Prepared By:

05/13/2015

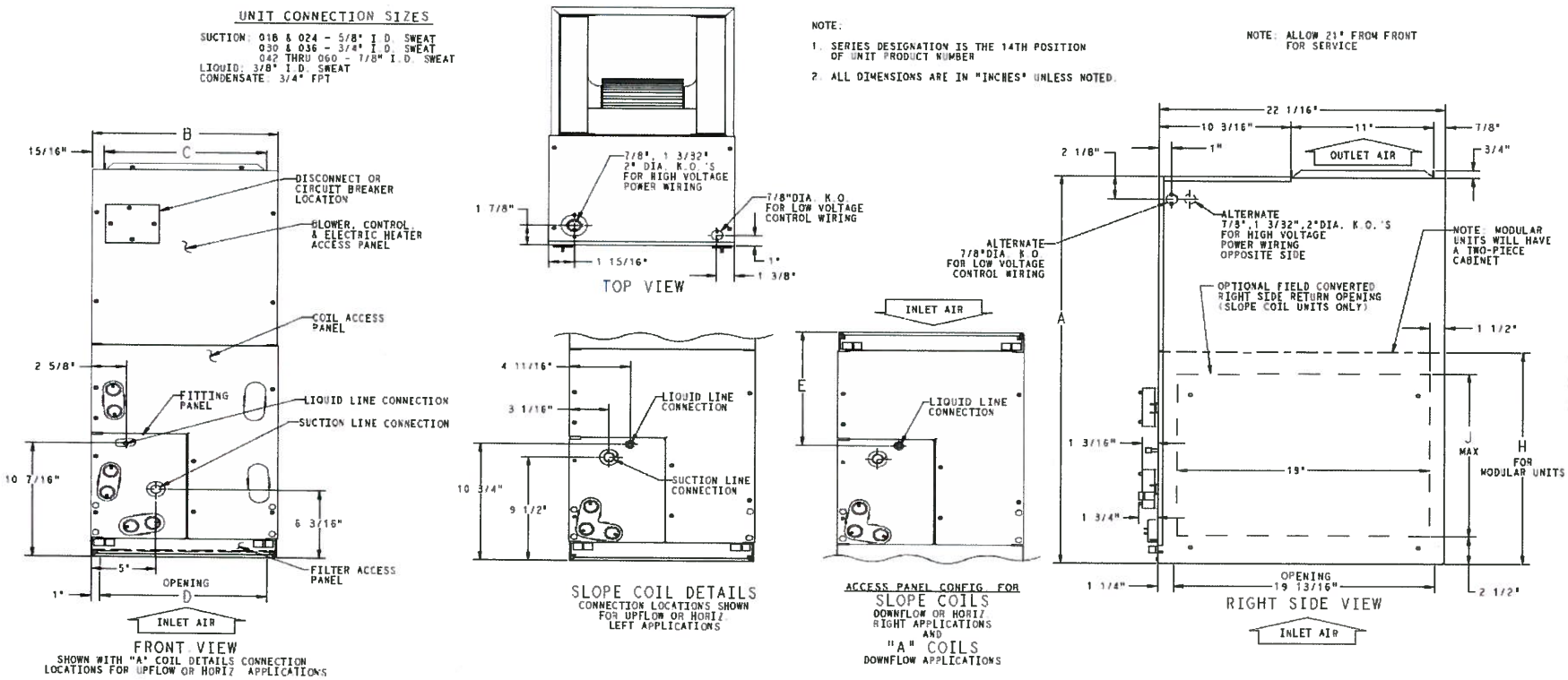

Indoor Model

Unit Model: **FX4D**
Unit Size: **24,000 Btuh**
Voltage: **208/230-1-60** V-Ph-Hz
Cabinet Insulation: **Single-piece cabinet with 1-in. super thick insulation**

Dimensions and Weights	Indoor Unit
Height	49.63 in
Width	17.63 in
Length	22.06 in
Shipping Weight	122. lb

Dimensions								
A	B	C	D	E	F	G	H	J
49.63 in	17.63 in	15.75 in	15.63 in	15.38 in	23.13 in	23.63 in	--	17.00 in

The Product and Ratings Data in this program is subject to change at any time and without notice. Please refer to the latest product literature and the AHRI directory at www.ahridirectory.org for the most up-to-date information.

Certified Drawing For 2T Split HP

Project: Climatec Energy - La Cienega Tennis Center
Prepared By:

05/13/2015

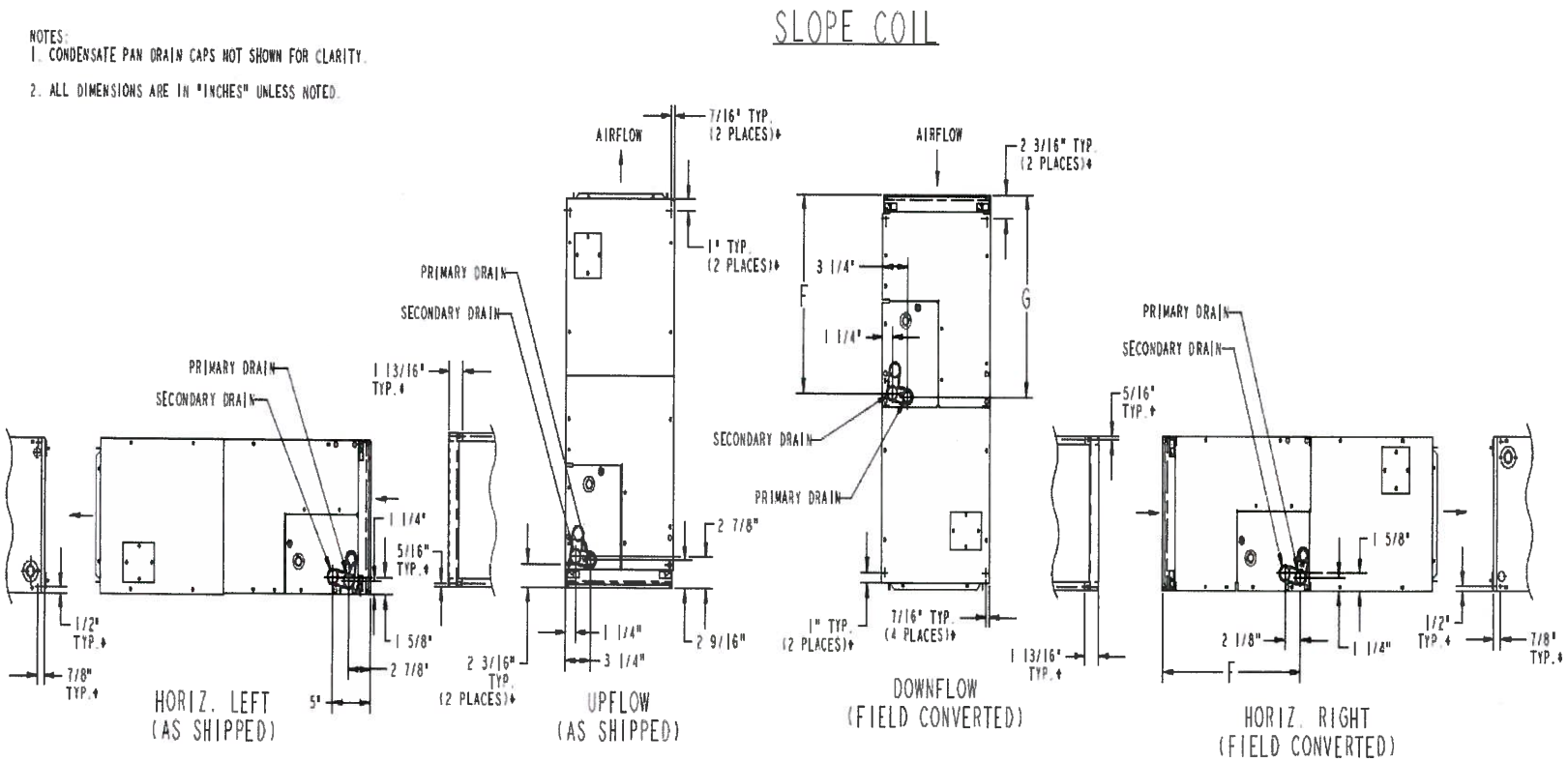

Indoor Model

Unit Model:	**FX4D**
Unit Size:	**24,000 Btuh**
Voltage:	**208/230-1-60** V-Ph-Hz

The Product and Ratings Data in this program is subject to change at any time and without notice. Please refer to the latest product literature and the AHRI directory at www.ahridirectory.org for the most up-to-date information.

Certified Drawing For 2T Split HP

Project: Climatec Energy - La Cienega Tennis Center
Prepared By:

05/13/2015

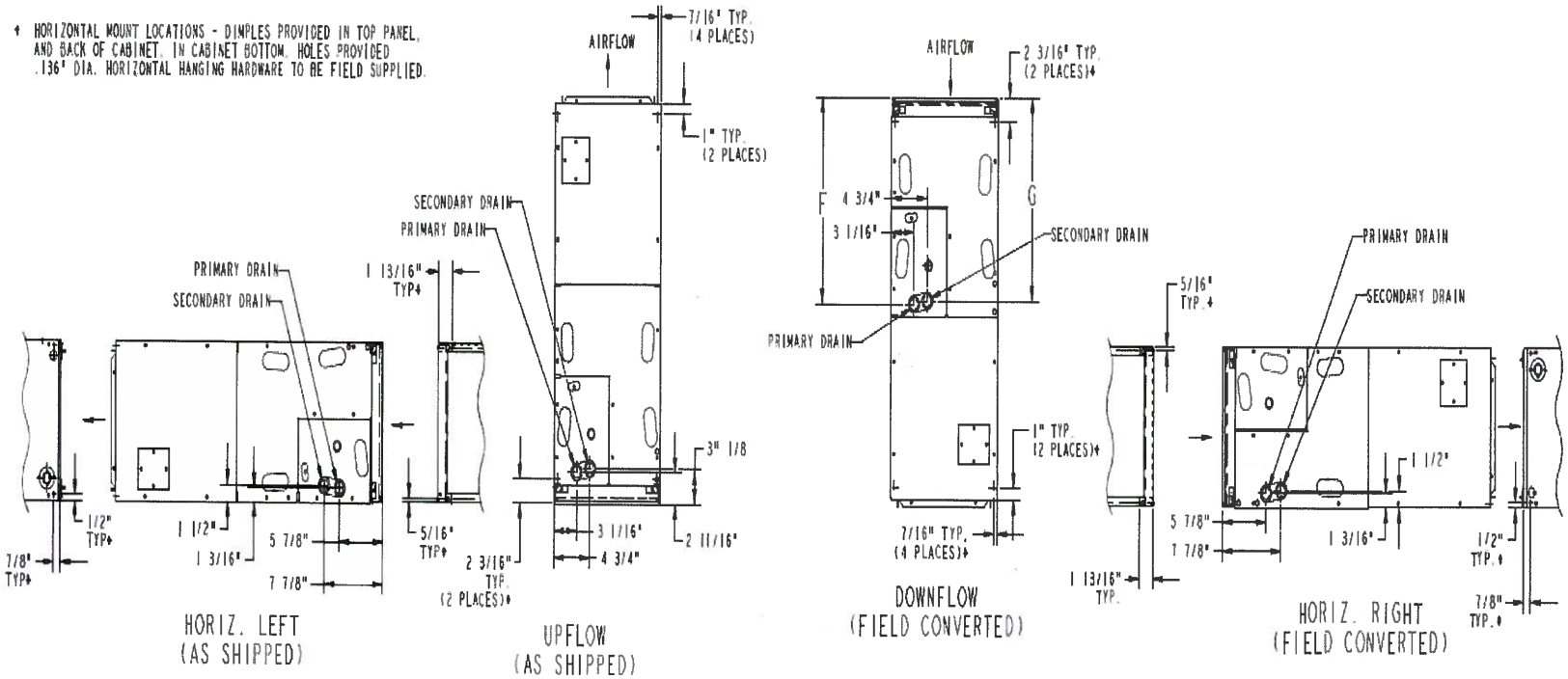

A-COIL

Indoor Model

Unit Model:	**FX4D**
Unit Size:	**24,000 Btuh**
Voltage:	**208/230-1-60** V-Ph-Hz

The Product and Ratings Data in this program is subject to change at any time and without notice. Please refer to the latest product literature and the AHRI directory at www.ahridirectory.org for the most up-to-date information.

5T Split HP Option 2

Submittal Cover Sheet
Unit Report
Performance Summary Report
Acoustic Summary
Certified Drawings

Unit Report For 5T Split HP Option 2

Project: Climatec Energy - La Cienega Tennis Center 05/13/2015
Prepared By:

Outdoor Unit Parameters

Unit Model: **25HCE**
Unit Size: **5 Tons**
Voltage: **208/230-1-60** V-Ph-Hz

Indoor Unit Parameters

Unit Model: **FX4D**
Unit Size: **60,000 Btuh**
Cabinet Insulation: **Single-piece cabinet with 1-in. super thick insulation**
Voltage: **208/230-1-60** V-Ph-Hz
Heating Size: **No Heat**

Outdoor Unit Dimensions and Weight

Unit Length: **31.1875** in
Unit Width: **31.1875** in
Unit Height: **31.8125** in
Unit Shipping Weight: **248.** lb

Indoor Unit Dimensions and Weight

Unit Length: **22.0625** in
Unit Width: **24.6875** in
Unit Height: **59.1875** in
Unit Shipping Weight: **201.** lb

Limited Warranty (Years)		
Item	**Original Owner**	**Subsequent Owner**
Parts	10* (or 5)	5

***When registered within 90 days of installation to the original owner.**

Ordering Information

Part Number	Description	Quantity
Outdoor Unit		
25HCE460A003	Comfort Series Heat Pump with Puron 5 Tons Cooling	1
	14 SEER @ ARI Conditions	1
Indoor Unit		
FX4DNF061L00	FX4D Comfort Series Fan Coil with Puron 60000 BTU Cooling	1
	Single-piece cabinet with 1-in. super thick insulation	1
	Aluminum	1

The Product and Ratings Data in this program is subject to change at any time and without notice. Please refer to the latest product literature and the AHRI directory at www.ahridirectory.org for the most up-to-date information.

Performance Summary For 5T Split HP Option 2

Project: Climatec Energy - La Cienega Tennis Center 05/13/2015
Prepared By:

System Performance

System:	**25HCE/FX4D**	
System Quantity:	**1**	
Altitude:	**0.0**	ft
Linear Pipe Length:	**0.0**	ft
COP @ 47 F:	**3.70**	
COP @ 17 F:	**2.56**	
SEER @ ARI Conditions:	**14.0**	
EER @ ARI Conditions:	**11.7**	
HSPF @ ARI Conditions:	**8.2**	

Actual Airflow:	**1888.0**	CFM
Standard Airflow:	**1888.0**	CFM
Total Net Clg Capacity:	**54.05**	MBH
Net Sensible Clg Capacity:	**44.19**	MBH
Htg HP Capacity:	**54.86**	MBH
Htg HP Integrated Capacity:	**54.86**	MBH
Heating HP Compressor Power:	**4.29**	kW
Total System Power:	**4.31**	kW

System Parameters

Outdoor Unit Parameters

Unit Model:	**25HCE460A003**	
Unit Size (Nominal):	**5 Tons**	
Voltage:	**208/230-1-60**	V-Ph-Hz
Htg Ent Air DB:	**70.0**	°F
Htg Lvg Air DB:	**96.9**	°F
Clg Ent Air DB Ambient:	**95.0**	°F
Htg Ent Air DB Ambient:	**47.0**	°F

Indoor Unit Parameters

Unit Model:	**FX4DNF061L00**	
Unit Size (Nominal):	**60,000 Btuh**	
Voltage:	**208/230-1-60**	V-Ph-Hz
Ent Air DB:	**80.00**	°F
Ent Air WB:	**67.00**	°F
Ent Enthalpy:	**31.44**	BTU/lb
Lvg Air DB:	**58.33**	°F
Lvg Air WB:	**58.06**	°F
Lvg Enthalpy:	**25.08**	BTU/lb
Heating Size (Nominal):	**No Heat**	
Indoor Unit External Static:	**0.50**	in wg

Electrical Data

Outdoor Electrical Data

Unit Voltage:	**208/230-1-60**	V-Ph-Hz
Fan Motor FLA:	**1.52**	Amps
MCA:	**32**	Amps
Max Fuse:	**50**	Amps
Operating Range Min:	**197**	V
Operating Range Max:	**253**	V
Compressor RLA:	**24.4**	Amps
Compressor LRA:	**144.2**	Amps

Indoor Electrical Data:

(For units with no factory installed electric heaters)

Unit Voltage:	**208/230-1-60**	V-Ph-Hz
Unit FLA:	**6.0**	Amps
Unit MCA:	**7.5**	Amps
Unit MOCP:	**15.0**	Amps
Unit Min Wire Size:	**14.0**	
Motor HP:	**3/4**	HP

Notice: Indoor Elect. data is for 208/230-1-60 voltage

The Product and Ratings Data in this program is subject to change at any time and without notice. Please refer to the latest product literature and the AHRI directory at www.ahridirectory.org for the most up-to-date information.

Acoustic Summary For 5T Split HP Option 2

Project: Climatec Energy - La Cienega Tennis Center 05/13/2015
Prepared By:

Outdoor Unit Parameters:

Unit Model: **25HCE**
Unit Size: **5 Tons**
Variations: **Standard**

Octave Band Center Frequency, Hz	63	125	250	500	1k	2k	4k	8k	dBA
Sound Power,dB	0.0	50.0	63.0	62.0	63.0	60.0	58.0	52.0	
A-Weighted Sound Power, dBA									73.0

Indoor Unit Parameters:

Unit Model: **FX4D**
Unit Size: **60,000 Btuh**
Cabinet Insulation: **Single-piece cabinet with 1-in. super thick insulation**

Octave Band Center Frequency, Hz	63	125	250	500	1k	2k	4k	8k	dBA
Sound Power,dB	70.0	66.0	62.0	59.0	57.0	55.0	51.0	0.0	
A-Weighted Sound Power, dBA									0.0

The Product and Ratings Data in this program is subject to change at any time and without notice. Please refer to the latest product literature and the AHRI directory at www.ahridirectory.org for the most up-to-date information.

Certified Drawing For 5T Split HP Option 2

Project: Climatec Energy - La Cienega Tennis Center
Prepared By:

05/13/2015

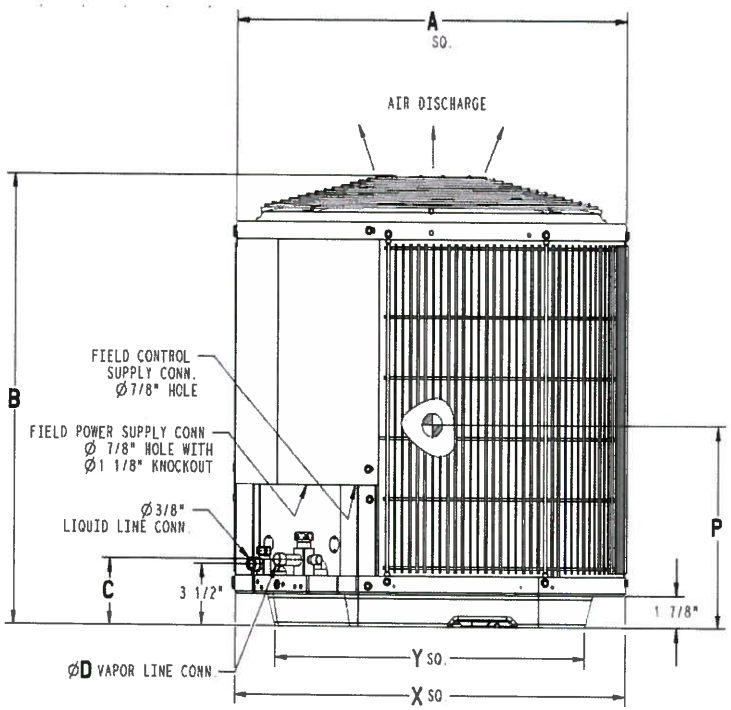

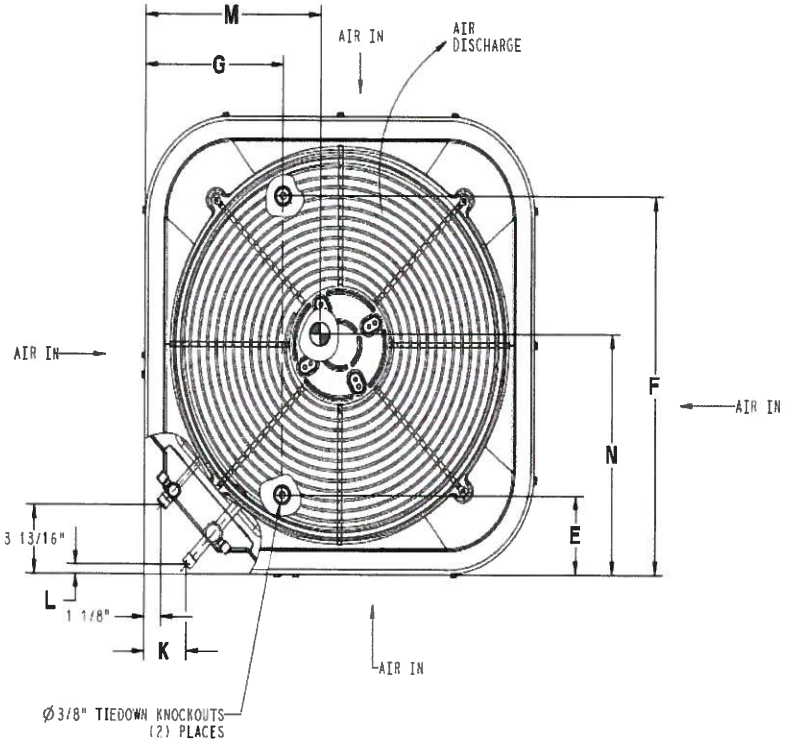

Outdoor Model

Unit Model:	**25HCE**	
Unit Size:	**5 Tons**	
Voltage:	**208/230-1-60**	V-Ph-Hz
SEER:	**14**	
PartNumber:	**25HCE460A003**	

Shipping Dimensions and Weights	Outdoor Unit
Height	36.63 in
Width	33.38 in
Length	33.38 in
Operating Weight	212. lb
Shipping Weight	248. lb

Dimensions											
A	B	C	D	E	F	G	K	L	M	N	P
31.19 in	31.81 in	3.88 in	0.88 in	6.56 in	24.69 in	9.13 in	2.94 in	0.63 in	14.75 in	15.75 in	16.25 in

The Product and Ratings Data in this program is subject to change at any time and without notice. Please refer to the latest product literature and the AHRI directory at www.ahridirectory.org for the most up-to-date information.

Certified Drawing For 5T Split HP Option 2

Project: Climatec Energy - La Cienega Tennis Center
Prepared By:

05/13/2015

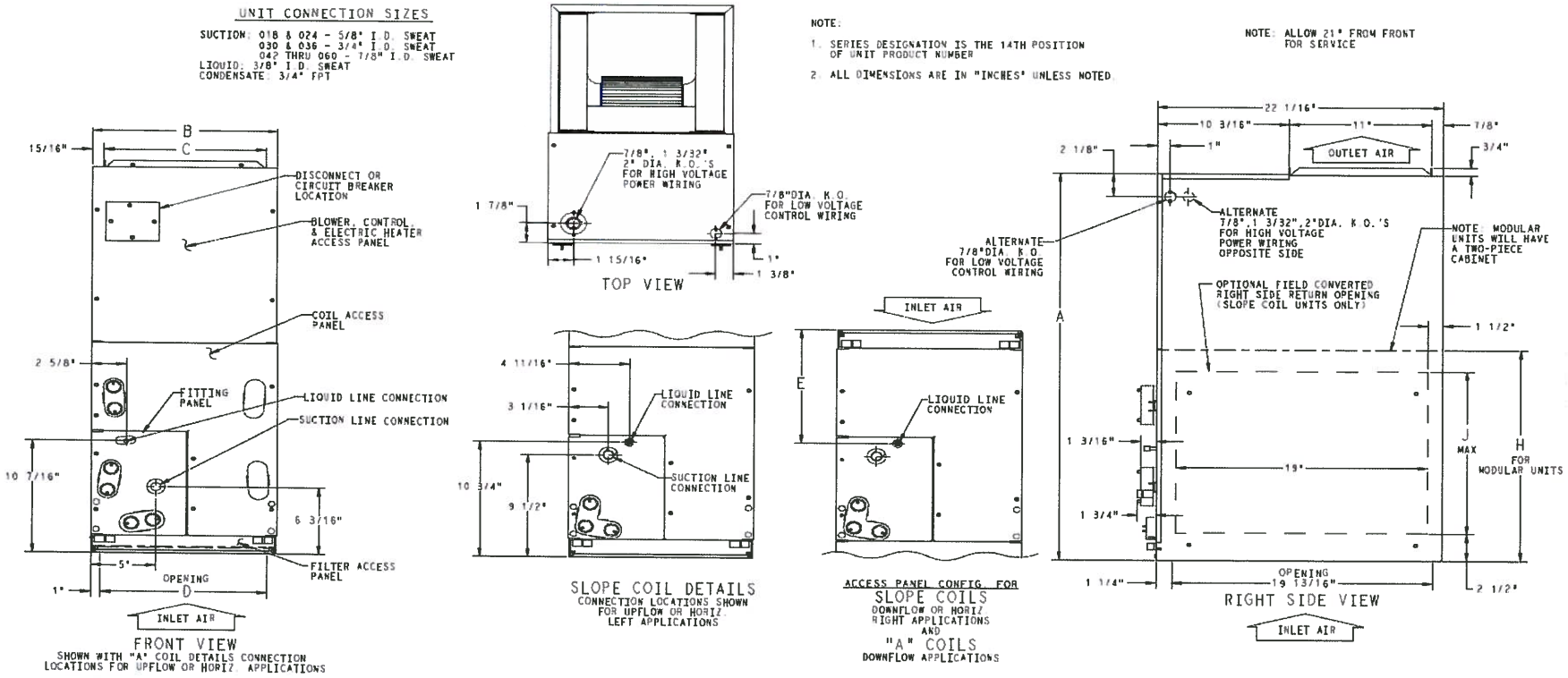

Indoor Model

Unit Model: **FX4D**
Unit Size: **60,000 Btuh**
Voltage: **208/230-1-60** V-Ph-Hz
Cabinet Insulation: **Single-piece cabinet with 1-in. super thick insulation**

Dimensions and Weights	Indoor Unit
Height	59.19 in
Width	24.69 in
Length	22.06 in
Shipping Weight	201. lb

Dimensions								
A	B	C	D	E	F	G	H	J
59.19 in	24.69 in	22.75 in	22.69 in	25.25 in	32.94 in	32.63 in	34.06 in	--

The Product and Ratings Data in this program is subject to change at any time and without notice. Please refer to the latest product literature and the AHRI directory at www.ahridirectory.org for the most up-to-date information.

Certified Drawing For 5T Split HP Option 2

Project: Climatec Energy - La Cienega Tennis Center
Prepared By:

05/13/2015

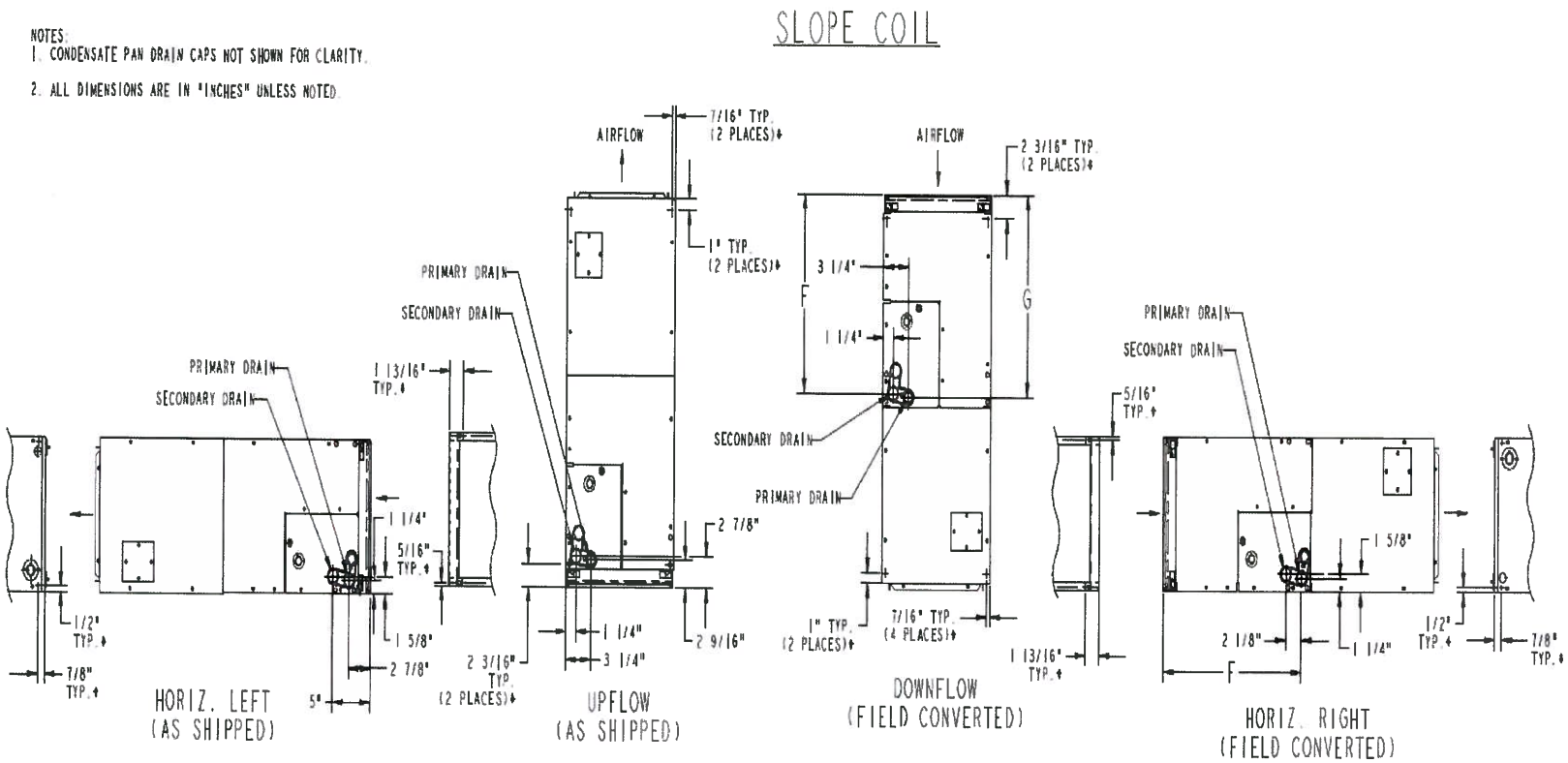

Indoor Model

Unit Model:	**FX4D**
Unit Size:	**60,000 Btuh**
Voltage:	**208/230-1-60** V-Ph-Hz

The Product and Ratings Data in this program is subject to change at any time and without notice. Please refer to the latest product literature and the AHRI directory at www.ahridirectory.org for the most up-to-date information.

Certified Drawing For 5T Split HP Option 2

Project: Climatec Energy - La Cienega Tennis Center
Prepared By:

05/13/2015

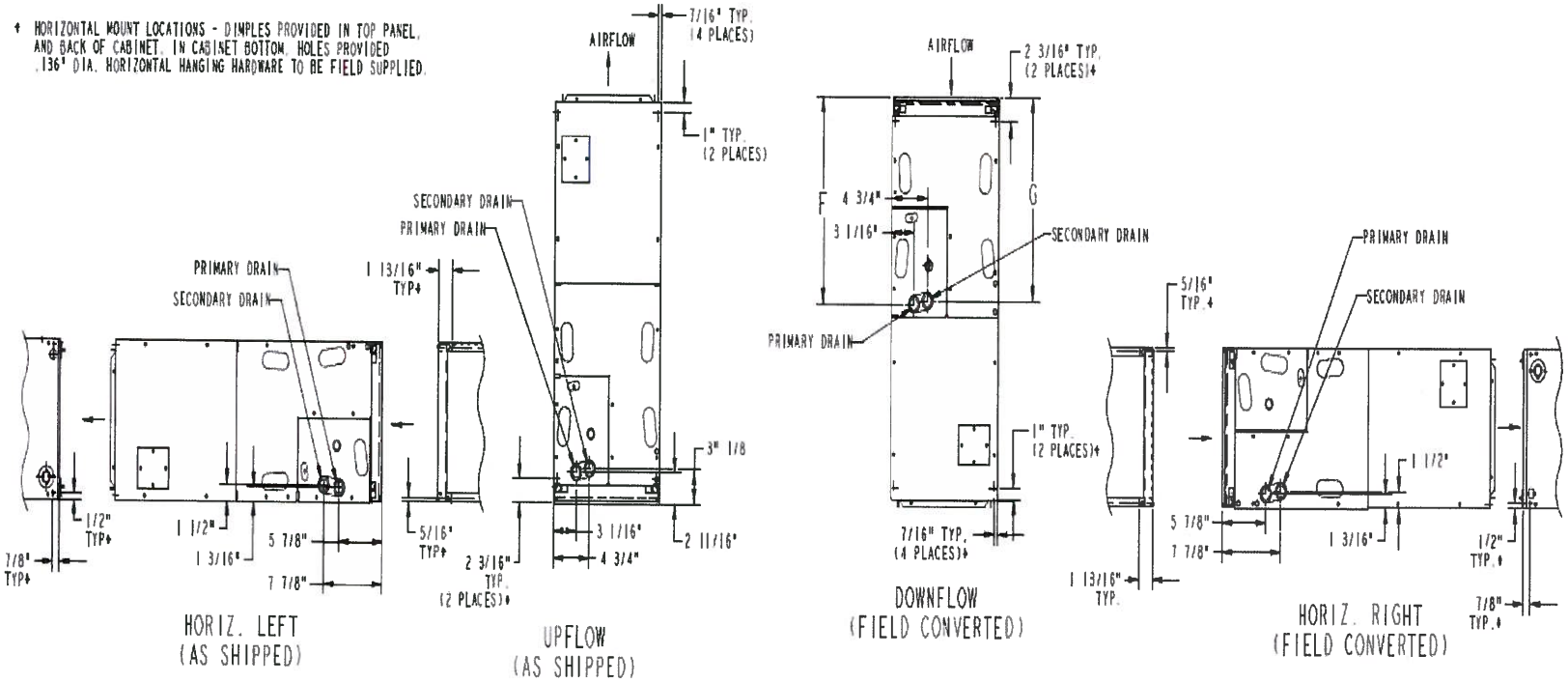

A-COIL

Indoor Model

Unit Model:	**FX4D**
Unit Size:	**60,000 Btuh**
Voltage:	**208/230-1-60** V-Ph-Hz

The Product and Ratings Data in this program is subject to change at any time and without notice. Please refer to the latest product literature and the AHRI directory at www.ahridirectory.org for the most up-to-date information.

SYSTXCCITW01–A, SYSTXCCITC01–A & SYSTXCCITN01–A Infinity® Touch Control

Carrier
turn to the experts

Product Data

A11577

NOTE: Infinity® Touch Control compatible with Infinity® rated equipment only.

US Patents: Carrier® U.S. Pat No. 7,243,004, Carrier® U.S. Pat No. 7,775,452, pointSET™ U.S. Pat No. 7,415,102

INFINITY® TOUCH CONTROL

Carrier specializes in creating a customized home comfort system tailored to your needs with our broad selection of residential heating and cooling products. The Infinity® Touch Control System is the ultimate control center for all of your system components. When you add an Infinity Touch Control to a compatible variable speed furnace, fan coil, or small packaged product, you will enjoy longer heating and cooling cycles at lower fan speeds for a more consistent temperature throughout your home. By adding a variable speed or 2-stage outdoor unit, you will enjoy extra benefits which include better humidity and temperature control as well as a more energy efficient comfort system. When paired with Infinity® Zoning controls, the Infinity Touch Control allows you to create up to 8 zones of customized comfort.

The Infinity® Zoning system does not require a bypass damper, leaving air temperature (LAT) sensor, or field-installed power transformer.

INDUSTRY LEADING FEATURES / BENEFITS

Carrier's revolutionary Infinity Touch Control is the smart control of the future. The Infinity Touch Control features a high resolution display, making it easier to read. Intuitive prompts let you program everything from humidity levels to fan speeds, giving you the ultimate control over your home comfort. Other features include:

- 4-wire installation from each component in the system
- Infinity® Zoning
- Intuitive on screen prompts for ease of installation and service
- *Ideal Humidity*™ settings are the default no longer requiring increased system setup
- Complete integration of the temperature, humidity and ventilation in every season
- 7-day programmability with Lifestyle Comfort Profiles and Touch-N-Go® features
- Easy timed-override schedule
- Simplified vacation schedules
- Day-at-a-glance programming for simplified ease of use
- Programmable fan by period
- TrueSense™ Dirty Filter Detection
- Indoor Air Quality pop up reminders
- General maintenance reminder messaging
- Wi-Fi remote access capability (SYSTXCCITW01-A & SYSTXCCITC01-A).
- Photo, dealer info, and software update USB upload capability
- Compatible with home automation through the SYSTXCCRCT01 or SYSTXCCRWF01.
- Compatible with Infinity® Small Packaged Products

MODEL NUMBER NOMENCLATURE

1	2	3	4	5	6	7	8	9	10	11	12	13	14
S	Y	S	T	X	C	C	I	T	W	0	1	–	A

Product Type
Infinity® System

Brand
Carrier

Model Type
ITW – Infinity® Touch Control with Wi–Fi & Wireless Access Point
ITC – Infinity® Touch Control with Wi–Fi
ITN – Infinity® Touch Control (non–Wi–Fi)

Packaged Quantity
01

Version
A

Comfort HEAT PUMP SYSTEM

ComfortHeat

IdealHumidity

INFINITY TOUCH

greenspeed™ INTELLIGENCE

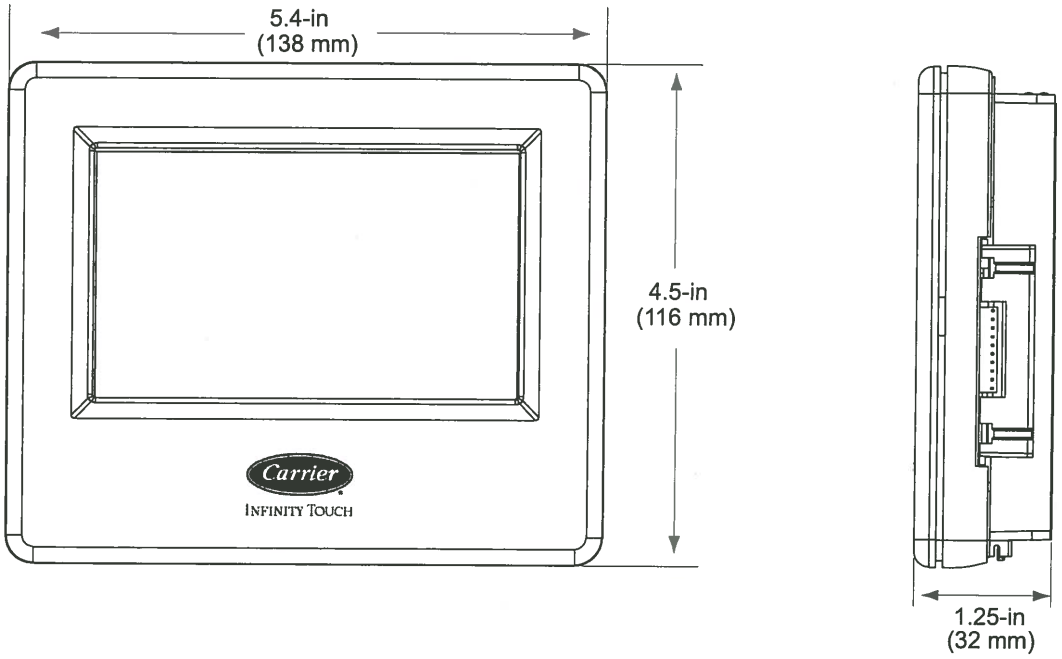

A11606

Fig. 1 - Unit Dimensions

PRODUCT DATA INFORMATION

Compatible Communicating Products

Compatible with most Infinity® System indoor and outdoor equipment built since 2004; see equipment specifications for details

Home Automation System Interface

The Infinity Touch control can connect to a variety of Home Automation systems. Note that not all Home Automation systems may be compatible. Reference the latest version of the Application Specification titled "SAM Remote Access Application Specification," available on HVACpartners.com to learn more about the latest Home Automation interfaces to the Infinity systems. Work with the home automation supplier to see if the systems are compatible. If not, you may provide the "SAM Remote Access Application Specification" to the home automation supplier to develop an interface with the Infinity Touch system. Always be sure to obtain the latest version of the application specification from HVACpartners, as we continually update and add home automation interfaces.

NOTE: The ability to remotely access and adjust the settings of the Infinity Touch Control with the MyInfinity web and mobile applications is dependent on the compatibility of the user's computer, home network and/or mobile device, the Infinity Touch Control, and/or the MyInfinity web server or other system interfaces with, and the availability of, the user's internet service provider or mobile device carrier service. Carrier Corporation makes no representations or warranties, express or implied, including, to the extent permitted by applicable law, any implied warranty of merchantability or fitness for a particular purpose or use, about the compatibility of the user's computer, home network, and/or mobile device, with the Infinity Touch Control, and/or the MyInfinity web server or other system interfaces, with, and the availability of, the user's internet service provider or mobile device carrier service, or that the ability to remotely access and adjust the settings of the Infinity Touch Control will not be negatively affected by the network-related modifications, upgrades, or similar activity of the user's internet service provider or mobile device carrier service.

Physical Characteristics

Dimensions: See drawing

Appearance: Plastic, Silver (Black and White Changeable Faceplates included)

Electrical Characteristics/Communication

Input Volts/Amps 24VAC

Each device in the Infinity® System has a four-pin connector labeled ABCD. It is recommended that the following color code be used when wiring each device:

A — Green = Data A

B — Yellow = Data B

C — White = 24VAC (Com)

D — Red = 24VAC (Hot)

Environmental Requirements:

Operating Temperature/Relative Humidity:

User interface and all sensors: 32°F to 104°F / 0°C to 40°C, 95% rh non-condensing

Feature Specifications:

Temperature set point range: 50°F to 90°F / 4.4°C to 32.2°C

Separate heat and cool setpoints

Programming days: 7 day

Programming periods: Up to 5 periods per day

Smart Setback (with programming)

Touch-N-Go® feature

Non-Programmable

Auto changeover (may be disabled)

Programmable fan (installer selectable)

Humidity Sensor Offsets

Auto Changeover Timer (installer adjustable)

Smart Recovery (in heating and cooling)

Hold function

Copy functions: Copy period, day

Permanent memory

Humidity display and control

Temperature sensor offsets (indoor and outdoor)

TrueSense™ Dirty Filter Detection with compatible indoor equipment

Wiring Requirements:

Power supply: Dedicated 24VAC, 40 va, 60 Hz, via indoor equipment ABCD Connector. Isolated transformer, field supplied.

Wiring material: Standard thermostat wire 18 to 24 gauge.

EQUIPMENT

DESCRIPTION	PART NO.
Infinity® Touch Control (non–Wi–Fi)	SYSTXCCITN01–A
Infinity® Touch Control with Wi–Fi	SYSTXCCITC01–A
Infinity® Touch Control with Wi–Fi Remote Access Capability & Wireless Access Point	SYSTXCCITW01–A
Infinity® Network Interface Module (NIM)	SYSTXCCNIM01*

* Required for ventilator control
* Required for Hybrid Heat applications with non–communicating heat pumps
* Required for use with 2–stage (non–communicating) AC or HP

OPTIONAL ACCESSORIES

DESCRIPTION	PART NO.
Infinity® Remote Room Sensor (RRS)	SYSTXCCRRS01*
Large Decorative Backplate	SYSTXXXDBP01†
10 Pack Replacement – Green Indoor Unit Plug (ABCD Connector)	SYSTXGRPLG10
Outdoor Sensor	TSTATXXSEN01–B
Wireless Access Point (WAP)	SYSTXXXGWR01
Infinity Remote Access Module, Broadband Cat–5 Wired	SYSTXCCRCT01
Infinity Remote Access Module, Broadband Wi–Fi Wireless	SYSTXCCRWF01

* Not required, but may be used to remote sense indoor room temperature.
† Backplate dimensions – 5.75–in. (146 mm) wide x 6–in. (152 mm) high.

ZONING EQUIPMENT

DESCRIPTION	PART NO.
Infinity Damper Control Module (4 Zone)	SYSTXCC4ZC01†
Infinity Smart Sensor	SYSTXCCSMS01-B

* NOTE: Each piece of the zoning equipment is purchased separately allowing for customization of the zoning application.
† One Damper Control Module for up to 4 zones. A second Damper Control Module is required for zones 5–8.

DAMPER REPLACEMENT ACCESSORIES

DESCRIPTION	PART NO.
45° Actuator for round dampers	DAMPACT45DEG-R
90° Actuator for rectangular dampers	DAMPACT90DEG-R
Damper Control Module 1-amp Fuse	ATO1*

*Available from RC.

DAMPERS

DESCRIPTION		PART NO.
Round Dampers	6 in.	DAMPRND06INC-B
	8 in.	DAMPRND08INC-B
	10 in.	DAMPRND10INC-B
	12 in.	DAMPRND12INC-B
	14 in.	DAMPRND14INC-B
	16 in.	DAMPRND16INC-B
Rectangular Dampers	8 in. X 10 in.	DAMPREC08X10-B
	8 in. X 14 in.	DAMPREC08X14-B
	8 in. X 18 in.	DAMPREC08X18-B
	8 in. X 24 in.	DAMPREC08X24-B
	10 in. X 10 in.	DAMPREC10X10-B
	10 in. X 14 in.	DAMPREC10X14-B
	10 in. X 18 in.	DAMPREC10X18-B
	10 in. X 24 in.	DAMPREC10X24-B

DAMPERS (CONT.)

DESCRIPTION		PART NO.
Slip-In Dampers	Side mount, 8 X 8	DAMPSLS08X08-B
	Bottom mount, 8 X 8	DAMPSLB08X08-B
	Side mount, 8 X 10	DAMPSLS08X10-B
	Bottom mount, 8 X 10	DAMPSLB08X10-B
	Side mount, 8 X 12	DAMPSLS08X12-B
	Bottom mount, 8 X 12	DAMPSLB08X12-B
	Side mount, 8 X 14	DAMPSLS08X14-B
	Bottom mount, 8 X 14	DAMPSLB08X14-B
	Side mount, 8 X 16	DAMPSLS08X16-B
	Bottom mount, 8 X 16	DAMPSLB08X16-B
	Side mount, 8 X 18	DAMPSLS08x18-B
	Bottom mount, 8 X 18	DAMPSLB08X18-B
	Side mount, 8 X 20	DAMPSLS08X20-B
	Bottom mount, 8 X 20	DAMPSLB08X20-B
	Side mount, 8 X 22	DAMPSLS08X22-B
	Bottom mount, 8 X 22	DAMPSLB08X22-B
	Side mount, 8 X 24	DAMPSLS08X24-B
	Bottom mount, 8 X 24	DAMPSLB08X24-B
	Side mount, 10 X 10	DAMPSLS10X10-B
	Bottom mount, 10 X 10	DAMPSLB10X10-B
	Side mount, 10 X 12	DAMPSLS10X12-B
	Bottom mount, 10 X 12	DAMPSLB10X12-B
	Side mount, 10 X 14	DAMPSLS10X14-B
	Bottom mount, 10 X 14	DAMPSLB10X14-B
	Side mount, 10 X 16	DAMPSLS10X16-B
	Bottom mount, 10 X 16	DAMPSLB10X16-B
	Side mount, 10 X 18	DAMPSLS10X18-B
	Bottom mount, 10 X18	DAMPSLB10X18-B
	Side mount, 10 X 20	DAMPSLS10X20-B
	Bottom mount, 10 X 20	DAMPSLB10X20-B
	Side mount, 10 X 22	DAMPSLS10X22-B
	Bottom mount, 10 X 22	DAMPSLB10X22-B
	Side mount, 10 X 24	DAMPSLS10X24-B
	Bottom mount, 10 X 24	DAMPSLB10X24-B
	Side mount, 12 X 12	DAMPSLS12X12-B
	Bottom mount, 12 X 12	DAMPSLB12X12-B
	Side mount, 12 X 14	DAMPSLS12X14-B
	Bottom mount, 12 X 14	DAMPSLB12X14-B
	Side mount, 12 X 16	DAMPSLS12X16-B
	Bottom mount, 12 X 16	DAMPSLB12X16-B
	Side mount, 12 X 18	DAMPSLS12X18-B
	Bottom mount, 12 X 18	DAMPSLB12X18-B
	Side mount, 12 X 20	DAMPSLS12X20-B
	Bottom mount, 12 X 20	DAMPSLB12X20-B
	Side mount, 14 X 14	DAMPSLS14X14-B
	Bottom mount, 14 X 14	DAMPSLB14X14-B
	Side mount, 14 X 16	DAMPSLS14X16-B
	Bottom mount, 14 X 16	DAMPSLB14X16-B
	Side mount, 14 X 20	DAMPSLS14X20-B
	Bottom mount, 14 X 20	DAMPSLB14X20-B
	Side mount, 16 X 16	DAMPSLS16X16-B
	Bottom mount, 16 X 16	DAMPSLB16X16-B
	Bottom mount, 16 X 20	DAMPSLB16X20-B

Copyright 2014 Carrier Corp. • 7310 W. Morris St. • Indianapolis, IN 46231 Edition Date: 03/14

Manufacturer reserves the right to change, at any time, specifications and designs without notice and without obligations.

Replaces: SYSTXCCITW-04PD

ROTORS MP ROTATOR SPRAYS VALVES **CONTROLLERS** SENSORS CENTRAL CONTROLS MICRO

ACC

Hunter®

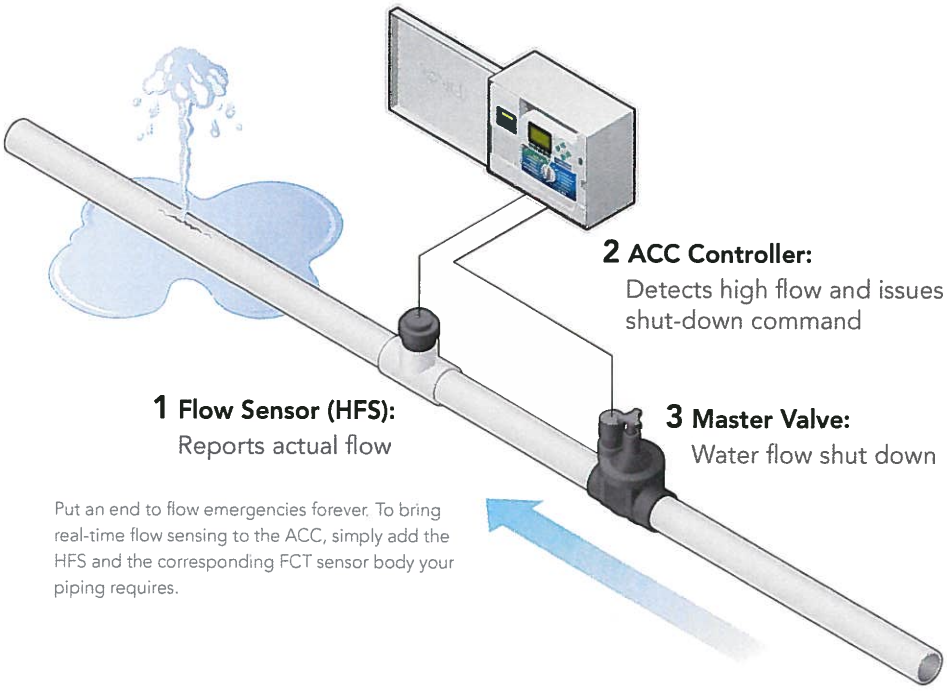

Put an end to flow emergencies forever. To bring real-time flow sensing to the ACC, simply add the HFS and the corresponding FCT sensor body your piping requires.

Real-Time Flow Sensing: Immediate Response to Abnormal Flows

ACC can be equipped with an HFS flow meter, and record and report actual flow totals in gallons or liters. The ACC can also be directed to learn typical flow by station, and then troubleshoot high or low flow conditions to station level. When paired with a Normally Closed Master Valve, this can prevent waste and damage, while continuing to operate normal stations.

ACC Pedestal Models

Featuring the highest-grade construction, the ACC plastic pedestal can stand up to the harshest conditions Mother Nature (and humans) can dish out. The plastic pedestal is rustproof, weather-resistant, and UV-tested to prevent fading. Plus, it won't dent. In addition, you won't believe the amount of space in its interior. There's ample room to accommodate all of your field wiring and central control wiring needs, and it's even possible to permanently install the receiver for an ICR remote control.

The plastic pedestal is the perfect height and angle for easy programming.

ACC Solar Sync: Easy, Automatic Water Savings

The standalone, water-saving solution the industry has been waiting for. The ACC connects directly to Hunter's revolutionary Solar Sync sensor for automated weather adjustment and maximum water savings.

Solar Sync measures on-site evapotranspiration (ET) and adjusts ACC run times accordingly. All other ACC functions remain the same. All 99 decoder stations and each of the 6 automatic programs will operate normally but smarter.

Adjustments are tracked in the controller logs and visible in the main display. Any program may be exempted from automatic adjustment, if desired.

The Solar Sync sensor will also serve as the controller's Rain and Freeze shutdown sensor.

When It Has To Be Right

Need an uncompromising controller for the most demanding landscapes? Hunter's Advanced Commercial Controller (ACC) packs more value into a reasonably-priced controller than anything else on the market.

With more simultaneous programs and valves, automated troubleshooting, real time flow monitoring, built-in remote control, and standalone ET adjustment, Hunter's top-of-the-line ACC is ready for your largest projects.

The simple, intuitive controls will have you setting up large systems with ease, and the advanced features stand guard after you leave the property.

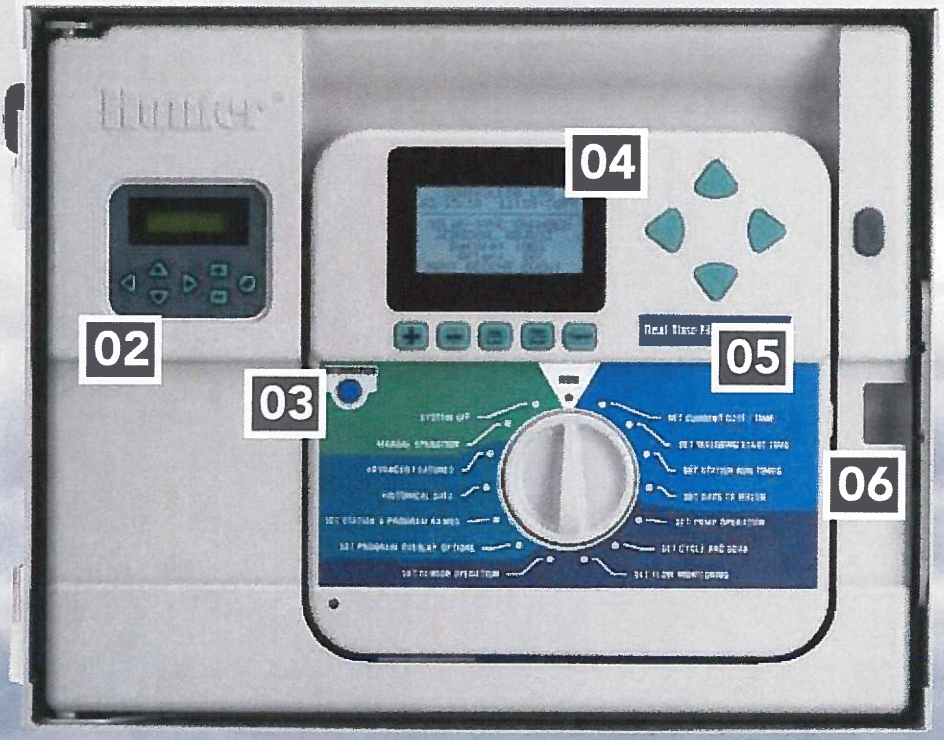

01 Remote Control Ready
Pre-wired to directly accept Hunter ICR or ROAM remote controls. Plug and go.

02 Easy Modular Upgrade to Two-way Communication with Central Control
Simple plug-in modules upgrade ACC to hardwire, modem, or radio control from central control software.

03 Information Button
Provides programming help and access to advanced features, and displays irrigation reports and actual flow in real time.

04 Large Backlit LCD
Adjustable contrast for easy viewing in both dim conditions and bright sunlight.

05 Facepack Features
Named Programs and Stations; Cycle and Soak; Pause/Resume; Flow Learning Mode By Station; Day of Week/Interval 1–31 Days/Odd or Even Schedules (by program); Non-Water Windows; Non-Water Days; Delay Between Stations (by program); Sensor Shutdown by Program; Programmable Contact Information; Easy Retrieve Save and Restore

06 USB 2.0 Input
Flash updates to the latest version of ACC, with free downloads from www.hunterindustries.com. Keep your ACC current with the latest features from Hunter. Also permits local programming of controller settings from laptop PC with IMMS software.

Start Small or Add It All

Customize the ACC for each installation with this family of plug-in accessories and sensors. Add flow monitoring and ET climate sensing, and choose from the entire Clik family of sensors. Add central control and/or wireless remote control for the ultimate in operating convenience. ACC controllers grow with your needs and budget.

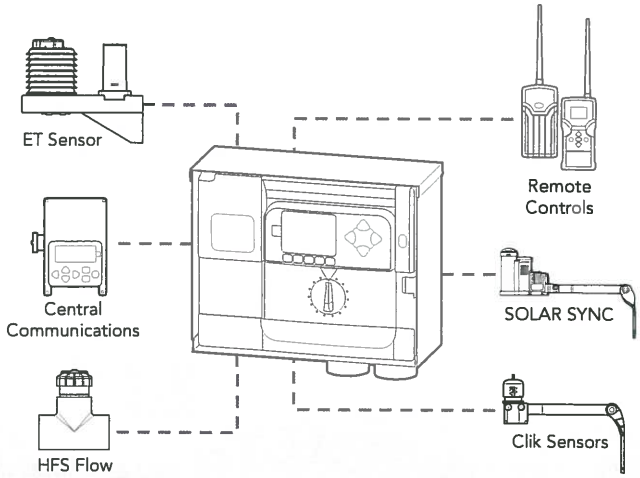

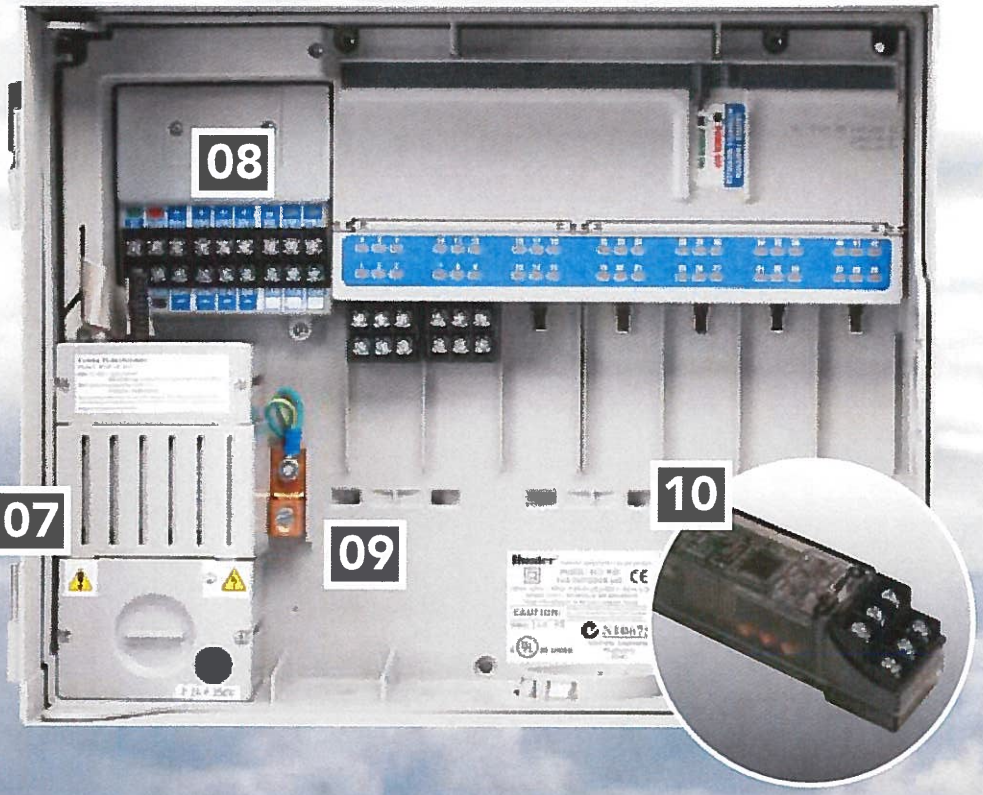

Easy-to-Read Backlit LCD Screen

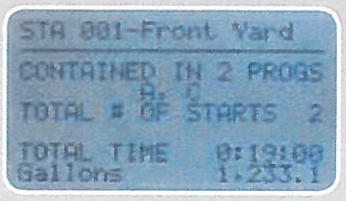

Irrigation Summaries

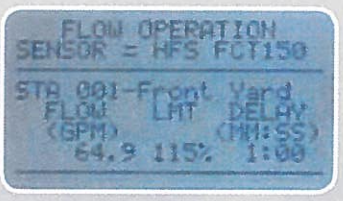

Learned Flow Database

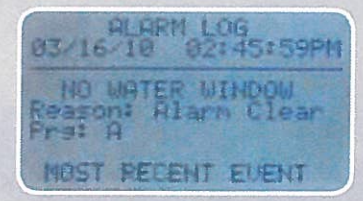

Alarm Log (up to 250 events)

07 Transformer
120/230 VAC transformer with global approvals, built-in surge protection, and enough power to run up to 6 programs at once.

09 Copper-clad Earth Ground Lug
Heavy duty connection for earth grounding of controller system. Advanced PTC surge protection throughout the controller relies on this industrial-strength connection.

08 Multiple Sensor Capability
Accommodates devices for weather and flow to provide automatic system shutoff in abnormal conditions, and water-saving adjustment for local ET.

10 Stations Expand with Plug-in Modules
Provides easy addition of more stations and simplified inventory management. Six-station modules in regular and extreme service lightning protection versions.

The Controller that Keeps History

The ACC tracks an unprecedented amount of irrigation history in its spacious memory, recording all activity and organizing it into four separate log files. This simplifies diagnostics and verifies proper operation.

FLOW TOTALS	Tracks water usage in gallons or liters by Controller, Program, Station Group, and Individual Station, for Day, Week, Month, and Year to Date (all compared with last Day, Week, Month, and Year)
ALARM LOG	Tracks all alarm events including sensor and flow alarms, overcurrent events, and other abnormal conditions (up to 250 events with date and time stamp)
CONTROLLER LOG	Records significant controller events such as Off command, Easy Retrieve backups, and user changes
STATION ACTIVITY LOG	On board event recorder displays up to 1500 most recent station activations, pauses, manual starts, and all watering activity with date and time stamp

Integrates Seamlessly with Hunter Irrigation Management and Monitoring System™

The ACC is designed to upgrade to a satellite controller in Hunter's IMMS, the affordable two-way central control system. IMMS can program and monitor a network of irrigation controllers over wide areas from a computer at a central location. Add an internal communications module for connection to a computer via cable, radio, dial-up telephone, or GSM cell phone, and get the big picture of irrigation control from your office. Add optional ET Sensors as needed to sample conditions in micro-climates, and have your central computer automatically base water use on evapotranspiration, as measured onsite. The IMMS system simplifies programming, saves water with ET control, monitors water usage with optional flow meters, and watches over your landscape investment for alarm conditions.

Now available with map-based navigation and control.

Plug-in Module

ET Sensor

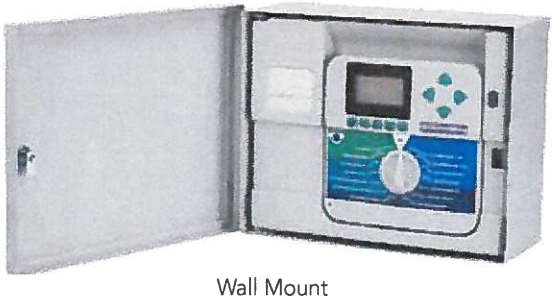

Wall Mount

Plastic Pedestal

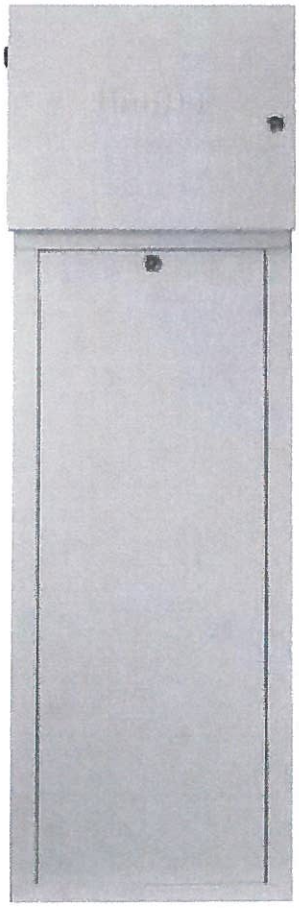

Metal Pedestal

Charts and Specs

BASE MODELS
ACC-1200 = 12-Station base unit controller, expands to 42 stations, metal cabinet
ACC-1200PP = 12-Station base unit controller, expands to 42 stations, plastic pedestal
ACC-99D = 2-Wire decoder controller with 99 station capacity, metal cabinet
ACC-99DPP = 2-Wire decoder controller with 99 station capacity, plastic pedestal

ACC-1200

EXAMPLES

ACC-99D - PED	
ACC-1800	BASE MODEL WITH ONE ACM-600
ACC-2400	BASE MODEL WITH TWO ACM-600
ACC-3000	BASE MODEL WITH THREE ACM-600
ACC-3600	BASE MODEL WITH FOUR ACM-600
ACC-4200	BASE MODEL WITH FIVE ACM-600

OPTIONS USER-INSTALLED
(blank) = No option
PED = Optional metal pedestal for metal cabinet models

PED

STATION EXPANSION MODULES	
ACM-600 =	6-Station plug-in module for use with the ACC-1200 series controllers
AGM-600 =	6-Station plug-in module for use with the ACC-1200 series controllers *(extreme service lightning protection version)*

COMMUNICATION OPTIONS SPECIFY SEPARATELY

MODELS	OPTIONS	PURPOSE
ACC-COM-HWR = Hardwire/radio module	(blank) = No option	Supports hardwire and radio communication options
ACC-COM-POTS = Dial-up modem module (also supports radio & hardwire)		Supports dial-up telephone line input, in addition to hardwire and radio communication sharing
ACC-COM-GSM = CSD cellular module (also supports radio & hardwire)	E = International frequencies	Supports GSM mobile input, in addition to hardwire and radio communication sharing (cell service required)

ACC-COM-HWR

EXAMPLES

ACC-COM-POTS

ACC-COM-GSM-E

USER-INSTALLED OPTIONS SPECIFY SEPARATELY

MODELS	DESCRIPTION	PURPOSE
ACC-HWIM	Hardwire interface module, required for hardwire connections	Provides surge-protected terminals for hardwired cable connections
RAD3	UHF radio module (North America), 450-470 MHz	UHF radio module for wireless connections *(license and antenna required and not included)*
RAD460INT	UHF radio module (International), 440-480 MHz *Consult factory for other international frequency ranges*	UHF radio module for wireless connections, international only *(license and antenna required and not included)*
APPBRKT	Communication bracket for plastic pedestals	Holds com modules and accessories in plastic pedestal *(not required in wall mounts)*

ACC-HWIM

EXAMPLES

RAD3

RAD460INT

APPBRKT

OPTIONAL FLOW SENSOR SPECIFY SEPARATELY

MODELS	DESCRIPTION
HFS = ACC and I-CORE compatible flow sensor	Includes sensor only. Use with ACC and I-CORE controllers, sensor requires FCT for pipe installation (sold separately)

HFS

DIMENSIONS

- ACC Cabinet:
  12⅜" H x 15½" W x 6⁷⁄₁₆" D
  (31.3 cm H x 39.3 cm W x 16.4 cm D)
- ACC Metal Pedestal:
  37" H x 15½" W x 5" D
  (92 cm H x 39.3 cm W x 12.7 cm D)
- ACC Plastic Pedestal:
  38⅜" H x 21⁹⁄₁₆" W x 15⅞" D
  (97.5 cm H x 54.6 cm W x 40.3 cm D)

SPECIFICATIONS AND FEATURES

- Transformer input:
  120 VAC, 2 A max (1.5 A, typical)
  230 VAC, 1 A max (0.7 A, typical)
- Transformer output: 24 VAC, 4 A
- Station output: 24 VAC, 0.56 A (2 valves)
- Maximum total output: 24 VAC, 4 A (14 valves), includes master valve circuits
- Two master valve outputs: 24 VAC, 0.325 A each
- Rain sensor override compatible with most brands utilizing a normally closed micro switch
- Seasonal adjustment: 0 to 300% in 1% increments
- All programs can run simultaneously or stack, selectable
- Self-diagnostic overload protection: skips shorted stations and continues watering
- Station run times: up to 6 hours
- Programmable delay between stations of up to 6 hours
- Programmable rain delay up to 31 days
- UL listed, CE, C-tick
- 365 day calendar (including leap year)
- Test program feature allows for quick system checks
- SmartPort®
- Central control compatible with Hunter IMMS™ system
- Upgrade to ET capability
- Solar Sync compatible

MODELS SPECIFY SEPARATELY
FCT-100 = 1" Schedule 40 sensor receptacle tee
FCT-150 = 1½" Schedule 40 sensor receptacle tee
FCT-158 = 1½" Schedule 80 sensor receptacle tee
FCT-200 = 2" Schedule 40 sensor receptacle tee
FCT-208 = 2" Schedule 80 sensor receptacle tee
FCT-300 = 3" Schedule 40 sensor receptacle tee
FCT-308 = 3" Schedule 80 sensor receptacle tee
FCT-400 = 4" Schedule 40 sensor receptacle tee

FCT-100

Hunter®
THE IRRIGATION INNOVATORS

Hunter Industries Incorporated
1940 Diamond Street, San Marcos, California 92078
www.hunterindustries.com

LIT-387 B 5/10

Hunter®

IMMS

Irrigation Management and Monitoring System

RESIDENTIAL & COMMERCIAL IRRIGATION

Built on Innovation

hunterindustries.com

IMMS: SYSTEM-WIDE CONTROL, COMPLETE USABILITY

IMMS: CENTRAL CONTROL FOR WIDE-AREA SYSTEM MANAGEMENT

Hunter's Irrigation Management & Monitoring Software (IMMS) is a PC-based software package that makes central control of large-scale irrigation systems affordable, usable, and comprehensible.

IMMS software and hardware have been intensively developed and refined into a graphically based irrigation command and control program. With IMMS, interactive map graphics (to station level) put the irrigation system manager in complete visual control of wide-area watering operations. An optional ET software add-on provides complete weather-based irrigation with station level soil moisture modeling, using inexpensive local ET sensors. IMMS has a full range of communications options, including Ethernet, GPRS mobile, dial-up telephone, UHF radio, and hardwired cable. IMMS is a Windows-based application that is compatible with Windows XP, Vista, and Windows 7 and 8.

Maps

Add a visual dimension to central control with background map graphics.

Programming

Station level symbols can be positioned over background images from any source.

Flow Monitoring

Track flow and other vital statistics in both charts and spreadsheets.

IMMS ADVANCED FEATURES

Maps

The IMMS graphics update includes the ability to create one or more map views for control purposes. You can see where all of your irrigated locations are, and click any for a more detailed view or control purposes.

Ideal for orienting new employees, IMMS Graphics also simplifies life for busy irrigators with large numbers of assets to control. Use any background image to show the system, site, or controller area, and create control zones and station symbols that link to their command functions. You supply the pictures, and IMMS includes all the tools you need to create an interactive map-based system.

Programming

Each controller has its own complete setup and operations screens.

Eliminate the confusion and hassle of multiple field personnel setting up irrigation with dials and buttons. Shut off irrigation with a mouse click for emergencies. Access every function of controllers from simple spreadsheets or choosing from a menu of common functions and commands.

Flow Monitoring

Track your water usage, and spot plumbing problems a mile away (or several hundred miles away). IMMS is built around the powerful ACC controller platform, which includes real-time flow monitoring.

With a flow meter and normally-closed master valves, the ACC detects incorrect flow conditions and moves swiftly to isolate the offending valves. Each flow violation is reported to the central software, after the controller has finished its own diagnostics.

Leaks, breaks, and flooding are minimized, and the irrigation manager is the first to know of any issues. IMMS also tracks total water usage by site, controller, program, and station. Keep detailed historical records, and go home each day with the peace of mind given by automatic flow monitoring.

IMMS-ET (Evapotranspiration)

The optional IMMS-ET software add-on uses cost-effective local sensors, combined with your station database to create water-saving irrigation programs for your whole system, every day.

IMMS-ET models the moisture level in soil reservoirs (including compensation for natural rainfall) and schedules just enough irrigation to replace what your plants need. IMMS-ET can track climate history according to your own sensors and document how it has responded with irrigation adjustments.

Alarm Management

IMMS reports all alarms, including over-currents, flow violations, communication issues, and water window violations, with individual date- and time-stamped messages.

The IMMS operator knows the state of all irrigation controllers and valves at a glance, without driving around town to check individual sites. Printable reports can be exported to other formats or handed to work crews for investigation.

Compatible Controllers & Sensors

- IMMS is optimized for the Hunter ACC controller and accessories (including decoder controllers).
- **HFS:** Hunter Flow Sync sensors for ACC controllers provide total flow reporting and flow alarm monitoring with diagnosis shutdowns in real time
- **Clik Sensors:** Each controller should have its own rain sensor for fast rain shutdowns. All Hunter Clik sensors are compatible with ACC.
- **ET Sensor:** ET Sensor platform is for use with IMMS-ET software. ET Sensor is added to selected ACC controllers, to report local conditions. This local ET data has no additional monthly charges and can be shared through the software to create schedules for other controllers in the same micro-climate. Add as many ET Sensors as needed to sample all micro-climates.

Learn more. Visit hunterindustries.com/imms, or speak with your local Hunter Sales Manager.

MIX & COMBINE COMMUNICATIONS TECHNOLOGIES:
LOWEST COST, HIGHEST RELIABILITY COMMUNICATIONS

Hunter has designed IMMS central control to communicate as simply and reliably as possible, through a host of available technologies. Let our specialists fit a system to your needs and avail-able infrastructure, to achieve total control at the lowest possible cost.

IMMS may be sub-divided into Sites, which are clusters of controllers within easy "talking distance" of one another. You can reach a distant Site with one form of communications, and then share that connection with other controllers in the area using different options. Low-cost, high performance ET, flow, and weather sensors share the controller network to add water savings and performance visibility to IMMS.

Full two-way communications with all controllers ensures reliable operation, rapid alarm notification, and complete reporting capabilities, wherever your irrigation is located.

Computer-to-Site Options

- **Ethernet (LAN):** Use existing local area networks to fixed IP addresses with LAN modules
- **Cellular**: Connect anywhere within reach of a cell carrier via GPRS smartphone
- **Dial-up Telephone:** Use a traditional dial-up modem to call your controllers
- **Hardwired Cable:** Use special hardwired cable to connect nearby controllers directly
- **All the Above:** Each Site can use the communications option that fits the location best-IMMS will reach them all.

On-Site Options

- **Hardwired Cable:** Connect additional controllers with dedicated in-ground cable
- **UHF Radio**: Connect additional controllers with wireless data radio (license required)
- **All the Above:** Combine the Site communications with both hardwire and radio to reach both near and distant controllers

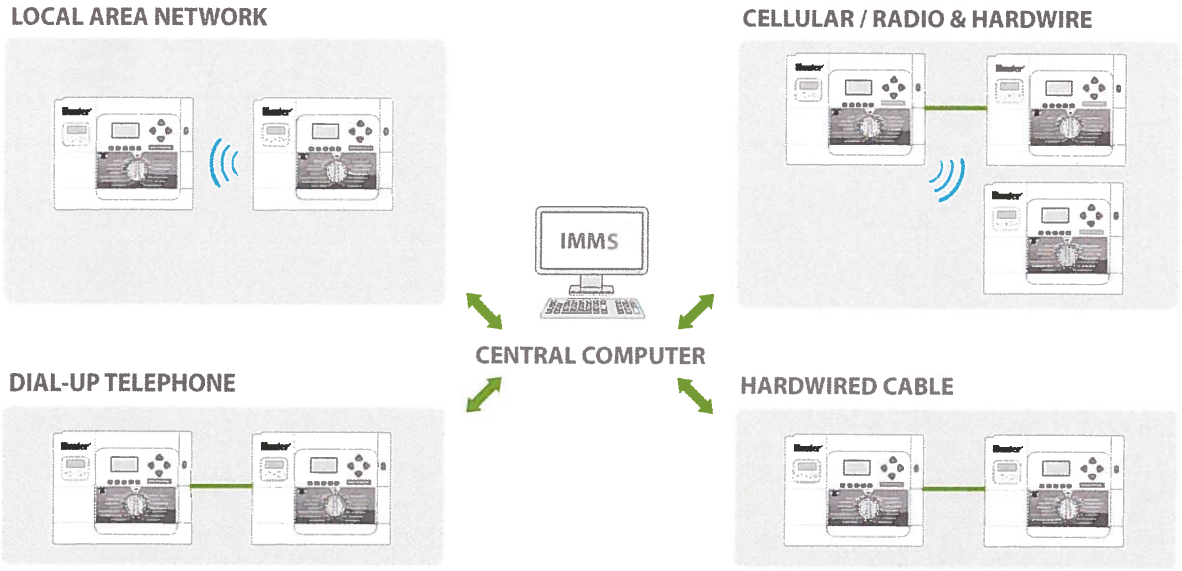

Learn more. Visit hunterindustries.com/imms or speak with a Hunter Central Control System specialist.

Website hunterindustries.com | **Customer Support** 760-744-5240 | **Technical Service** 760-591-7383

Helping our customers succeed is what drives us. While our passion for innovation and engineering is built into everything we do, it is our commitment to exceptional support that we hope will keep you in the Hunter family of customers for years to come.

Richard E. Hunter, CEO of Hunter Industries

MIX Paper from responsible sources FSC® C006076 www.fsc.org

© 2012 Hunter Industries Incorporated

LIT-349 G 11/12

LITHONIA LIGHTING®

Catalog Number	
Notes	
Type	

FEATURES & SPECIFICATIONS

INTENDED USE — The OLWP provides years of maintenance-free general illumination for commercial or residential outdoor applications such as driveways, patios, loading areas and warehouses.

CONSTRUCTION — Rugged cast-aluminum, corrosion-resistant rear mounting plate.

Impact resistant polycarbonate front cover/diffuser resists fading and cracking.

Driver operates at 120V.

Operating temperature -30°C to 40°C.

OPTICS — High-performance LEDs maintain 70% of light output at 50,000 hours of service. (LED lifespan based on IESNA LM-80-08 results and calculated per IESNA TM-21-11 methodology.)

Lenses are engineered for superior lighting distribution, uniformity and fixture spacing.

See Lighting Facts Labels for specific fixture performance.

INSTALLATION — Designed for wall mounting more than 4' above the ground. Mounts to a recessed junction box (by others).

LISTINGS — UL Listed to US and Canadian safety standards for wet locations.

WARRANTY — 5-year limited warranty. Complete warranty terms located at www.acuitybrands.com/CustomerResources/Terms_and_conditions.aspx

Actual performance may differ as a result of end-user environment and application.

Note: Specifications subject to change without notice.

Outdoor General Purpose

OLWP

LED WALL PACK

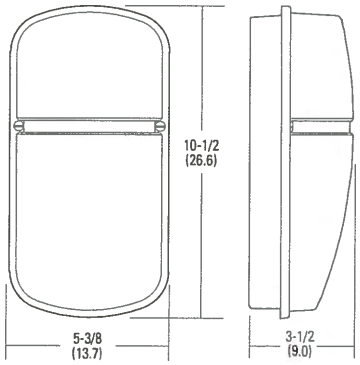

All dimensions are inches (centimeters) unless otherwise indicated.

ORDERING INFORMATION All configurations of this product are considered "standard" and have short lead times.

Example: OLWP 11 PE BZ

OLWP	11		PE	BZ
Series	**Lumens / Color temperature (CCT)[1]**	**Voltage**	**Control**	**Finish**
OLWP	**11** 1096 lumens / 4000K	**(blank)** 120V	**PE** Button photocell	**BZ** Bronze

Notes

1 Nominal Correlated Color Temperature (CCT) per ANSI C78.377-2008.

PHOTOMETRIC DIAGRAMS

To see complete photometric reports or download .ies files for this product,visit the OLWP home page on www.Lithonia.com. Tested in accordance with IESNA LM-79 and LM-80 standards.

OLWP 11

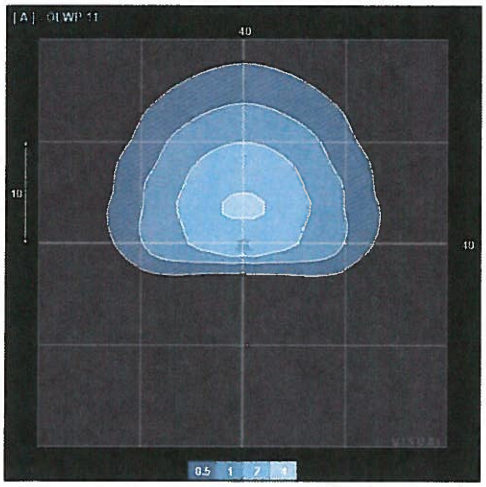

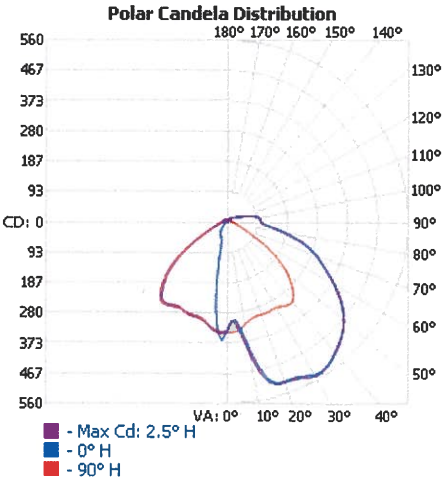

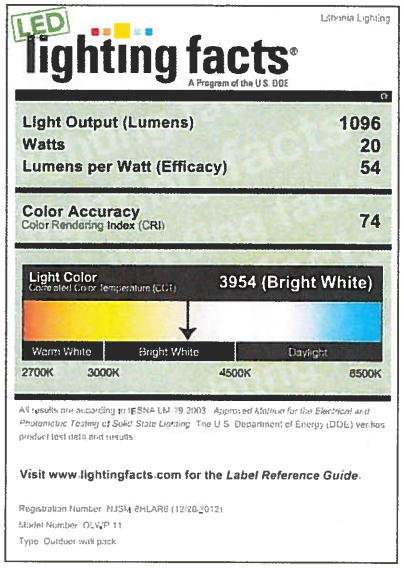

© 2013 Acuity Brands Lighting, Inc. All rights reserved. Rev. 03/14/13

Alumen8E

RSC

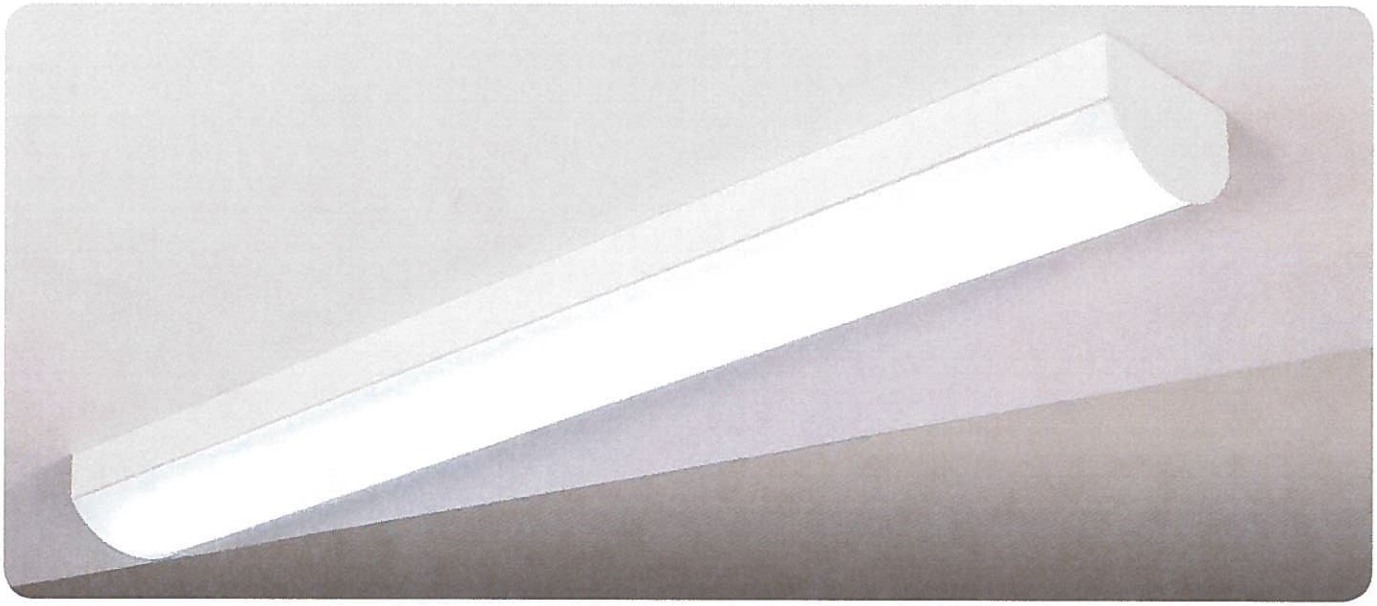

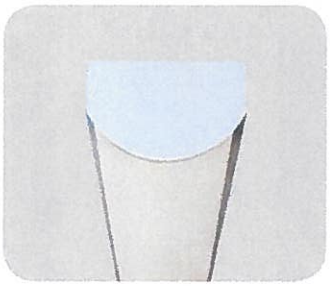

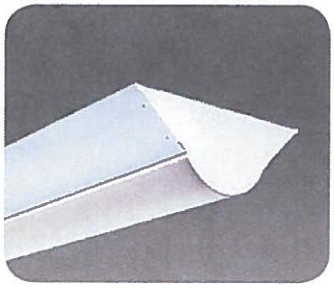

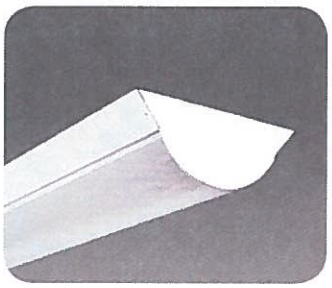

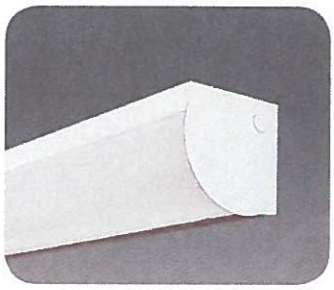

Mounting Styles / Dimensions

---, C, Y, SP, A

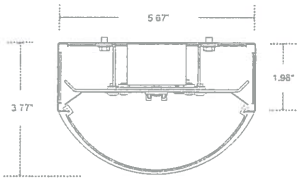

RW

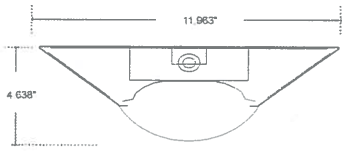

USC

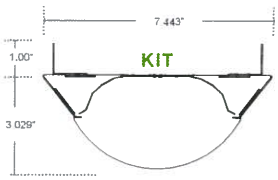

CM

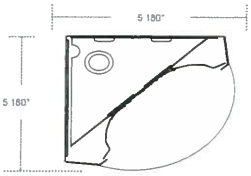

Polar Chart

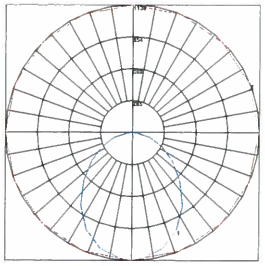

RSC
DLC Listed and Approved:
E-RSCP4L40LHRLUW
High Output LED
4ft
All Mounting Styles

DLC Approved Test:
Temp: 4000K
Lumens: 3725
Watts: 40.28
LPW: 92

DLC Listed and Approved

WALL MOUNT
CEILING
SUSPENDED
DIRECT
LED
T5
T8
TITLE 24

RSC

RADIAL LENS WRAP

Exterior

Applications
Parking Garage, Stairways, Canopies, Vanity, Ceilings, Walls.

Distribution
Direct.

Construction
22GA steel.

Dimension
Individual fixtures - Luminaires are available as individual 2', 3', 4' and 8' nominal lengths. Optional motion sensor extends fixture length 6".

Mounting
Surface mount - Housing covers a 4/O recessed J-Box or use the 1/2" conduit knockouts. Housing may be positioned as wall or ceiling mount for specific area lighting.

Suspension - Chain suspension is standard with attachment points located on housing back (chain by others). Designate optional powercord if required. Designate optional Y-toggle, 2.5" single point box (stem) or aircraft cable if required.

Shielding
5" radial clear or frosted - Proprietary radial, internal linear-patterned, clear acrylic lens. Lens exterior is clear or frosted. Weather-proof silicone gasketing. Optional vandal resistant lens retention: additional secured lens rails installed with stainless steel tamperproof hardware.

Diodes/Lamps
LED - High performance Nichia® LED's. Choose 3000k, 3500k, 4000k or 5000k color temperatures. Color rendering is 85+ CRI.

T5/T5HO/T8 - Lamps by others.

Lumen Output
Standard Output 2ft = 10w, 1200 lumens at engine, 3500k
High Output 2ft = 20w, 2400 lumens at engine, 3500k

Standard Output 4ft = 20w, 2400 lumens at engine, 3500k
High Output 4ft = 40w, 4800 lumens at engine, 3500k

Custom lumen packages available. Consult factory.

Driver
LED - Class 2 power supply, 12VDC, constant current. Inherent 0-10V dimming. Emergency ballast not available.

T5/T5HO - Universal 120-227V, low profile electronic, high power factor, program start, sound rating A, inherent thermal protection, UL listed Class P, <10% THD.

T8 - Universal 120-227V, low profile electronic, inherent thermal protection, <10% THD. Specify low, standard or high-output T8 ballast. Instant start is factory standard, specify program start in nomenclature if required.

Dimming or emergency ballast: specify manufacturer, model/series & voltage.

LED Warranty
Standard 5 yr warranty on LED components and universal voltage driver combination. 60,000hr LED life. Complies with IES LM-79 and LM-80.

Finish
Electrostatically applied post powder coat housing finish in gloss white is standard. Consult factory for other RAL color.

Listing
UL/CUL. Damp location. Sealed and gasketed. DLC Listed.

E-RSC	Project	Type	Quantity

Finish:	
P	Powdercoat gloss white
Dimension:	
2	Nominal 2' long x 5-11/16" wide
3	Nominal 3' long x 5-11/16" wide
4	Nominal 4' long x 5-11/16" wide
8	Nominal 8' long x 5-11/16" wide
Lamping:	
	LED:
L30	LED 3000k
L35	LED 3500k
L40	LED 4000k
L50	LED 5000k
	Fluorescent:
1	(1) lamp in cross section
2	(2) lamps in cross section
3	(3) lamps in cross section
Ballast:	
	LED:
LH	LED high output (DLC Listed, 40 w, 3750 lumens)
	Fluorescent:
S5	Standard T5
H5	High output T5HO
DS	Dimming standard T5 (specify type/voltage)
DH	Dimming high output T5HO (specify type/voltage)
S	Instant start - Standard T8
L	Instant start - Low output T8
H	Instant start - High output T8
PS	Program start - Standard T8
PL	Program start - Low output T8
PH	Program start - High output T8
D	Dimming T8 (specify type/voltage)
Shielding:	
RL	5" radial lens - clear acrylic
RLF	5" radial lens - frosted acrylic
Voltage:	
U	Universal 120V - 277V (factory standard)
H	Universal 347V - 480V
1	120V
2	277V
3	347V
4	480V
1B	Emergency ballast 120V
2B	Emergency ballast 277V
Reflector:	
E	Enhanced aluminum 95% reflective
W	White aluminum 90% reflective
Mounting:	
---	Surface mount (standard) or chain suspension (chain by others)
C	8ft black powercord
Y	Y-gripple® toggle 6" Y x 8ft (shipped separate)
SP	2.5" single point box
A	Aircraft cable
RW	12" wide tapered surface mount
USC	7.5" wide tapered surface mount KIT
CM	Corner Mount
Options:	
T__	Tuned Wattage
O	Open 360° motion sensor **extends fixture length 6"
D	Open 360° motion sensor w/ daylight control photocell **extends fixture 6"
V	Vandal resistant lens retention

DLC Listings:
E-RSCP4L40HRLUW
4000k, 3725lm, 40.28W, 92LPW
All Mounting and Option part numbers listed.

Made In The USA

Alumen8
An AMERILUMBRANDS Company
3728 Maritime Way Oceanside, CA 92056
760.727.7675 | www.alumen8e.com

V 2.2014

LITHONIA LIGHTING.

D-Series LED Flood Luminaire, Size 1

Precision Lighting. Unbelievable Savings. The D-Series Size 1 offers a wide variety of optical choices in a sleek, sophisticated design. Next-generation LED technology and precision engineered optics provide enhanced optical control and deliver exceptional on-target distributions with superior energy efficiency.

Quick **FACTS**

- 50-175W MH replacement
- Lumen packages up to 3,675 lumens
- Efficacies of up to 93 lumens per watt
- Multiple optics, covering spot to wide flood distribution
- Available in 3000K, 4000K & 5000K CCT
- 6kV surge protection
- Weight: 7.3 lbs; EPA: 0.60 ft^2

DESIGNLIGHTS CONSORTIUM

LED lighting facts

Key **FEATURES**

- Energy savings of 80% vs. comparable metal halide luminaires. Saves up to $74 per luminaire, per year over 175W metal halide
- 30-45% more lumens per watt than comparable LED luminaires
- 20+ years expected service life with high lumen maintenance - L84/100,000 hours
- Adjustable knuckle mount allows for precise aiming

d:series
better lighting from every angle™

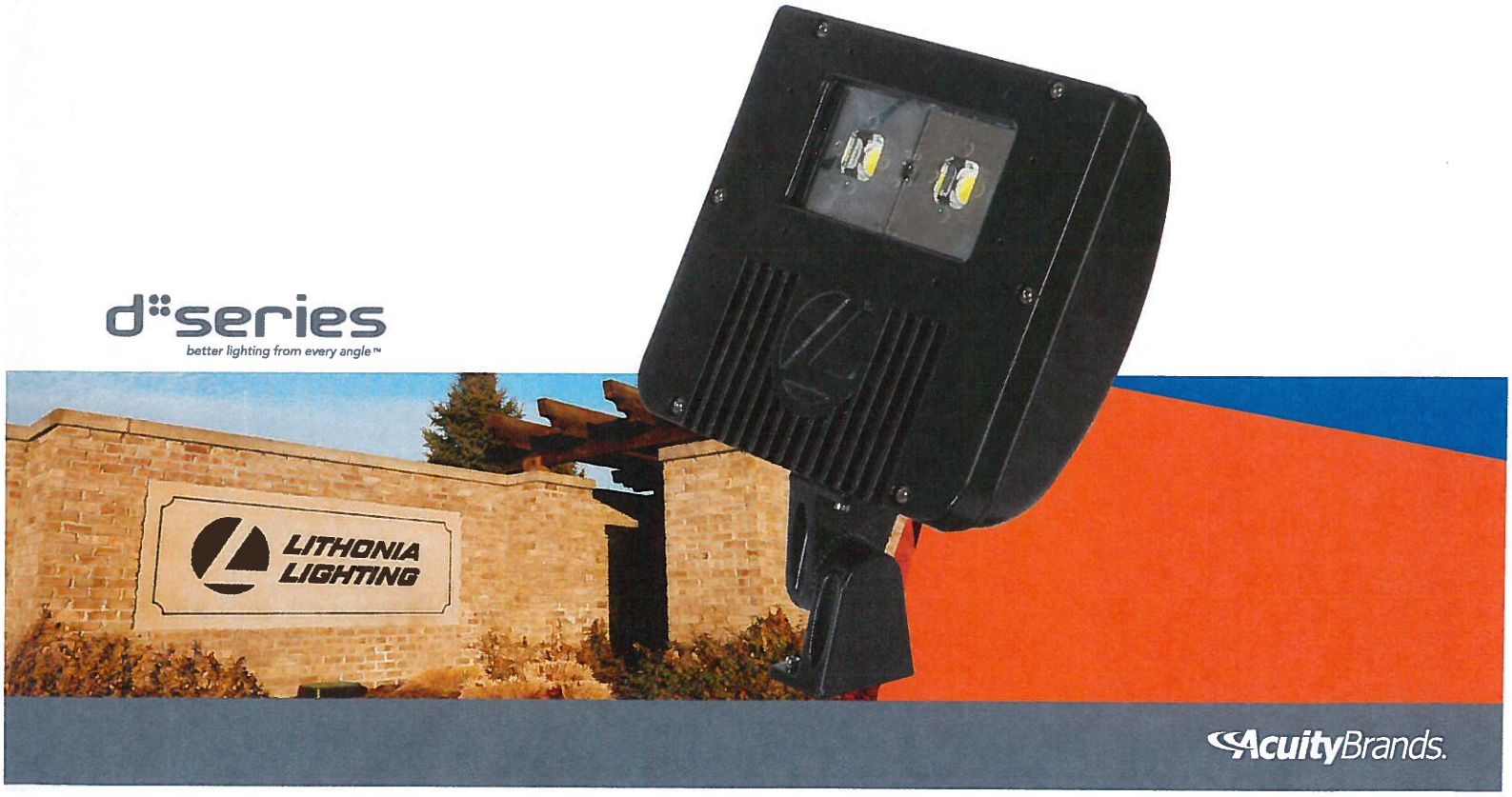

AcuityBrands.

D-Series LED Flood Luminaire, Size 1

ORDERING INFORMATION

EXAMPLE: DSXF1 LED 2 A530/40K MSP MVOLT THK DDBXD

DSXF1 LED

Series	Light Engines	Performance Package	Distribution	Voltage	Mounting	Options	Finish (required)
DSXF1 LED	1 One COB engine 2 Two COB engines	**530 mA options:** A530/30K 3000K A530/40K 4000K A530/50K 5000K	NSP Narrow spot MSP Medium spot MFL Medium flood FL Flood WFL Wide flood WFR Wide flood, rectangular HMF Horizontal flood	MVOLT [1] 120 [1] 208 [1] 240 [1] 277 [1]	**Shipped included** THK Knuckle with 1/2" NPS threaded pipe **Shipped separately** [2] DSXF1/2TS Tenon slipfitter (2-3/8" O.D. THK required)	**Shipped installed** PE Photocontrol, button style [3] SF Single fuse (120, 277V) [4] **Shipped separately** [2] UBV Upper/bottom visor (universal) FV Full visor VG Vandal guard	DDBXD Dark bronze DBLXD Black DNAXD Natural aluminum DWHXD White

Stock configurations are offered for shorter lead times:

Standard Part Number	Stock Part Number
DSXF1 LED 1 A530/40K WFL MVOLT THK DDBXD	**DSXF1 LED 1 40K**
DSXF1 LED 1 A530/50K WFL MVOLT THK DDBXD	**DSXF1 LED 1 50K**
DSXF1 LED 2 A530/40K WFL MVOLT THK DDBXD	**DSXF1 LED 2 40K**
DSXF1 LED 2 A530/50K WFL MVOLT THK DDBXD	**DSXF1 LED 2 50K**

Accessories

Ordered and shipped separately.

DSXF1/2TS DDBXD U	Slipfitter for 1-1/4" to 2-3/8" OD tenons, mates with 1/2" threaded knuckle (specify finish)
FRWB DDBXD U	Radius wall bracket, 2-3/8" OD tenon (specify finish)
FSPB DDBXD U	Steel square pole bracket, 2-3/8" OD tenon (specify finish)
DSXF1UBV DDBXD U	Upper/bottom visor accessory (specify finish)
DSXF1FV DDBXD U	Full visor accessory (specify finish)
DSXF1VG U	Vandal guard accessory

NOTES

1. MVOLT driver operates on any line voltage from 120-277V (50/60 Hz). Specify 120, 208, 240 or 277 options only when ordering with fusing (SF option) or photocontrol (PE).
2. Also available as separate accessories; see Accessories information at left.
3. Photocontrol (PE) requires 120, 208, 240 or 277 voltage option.
4. Single fuse (SF) requires 120 or 277 voltage option.

© 2013 Acuity Brands Lighting, Inc. All rights reserved. | Rev. 5/13 | Form No. 807.101

X series LED

Alumen8 Energy Lighting Products

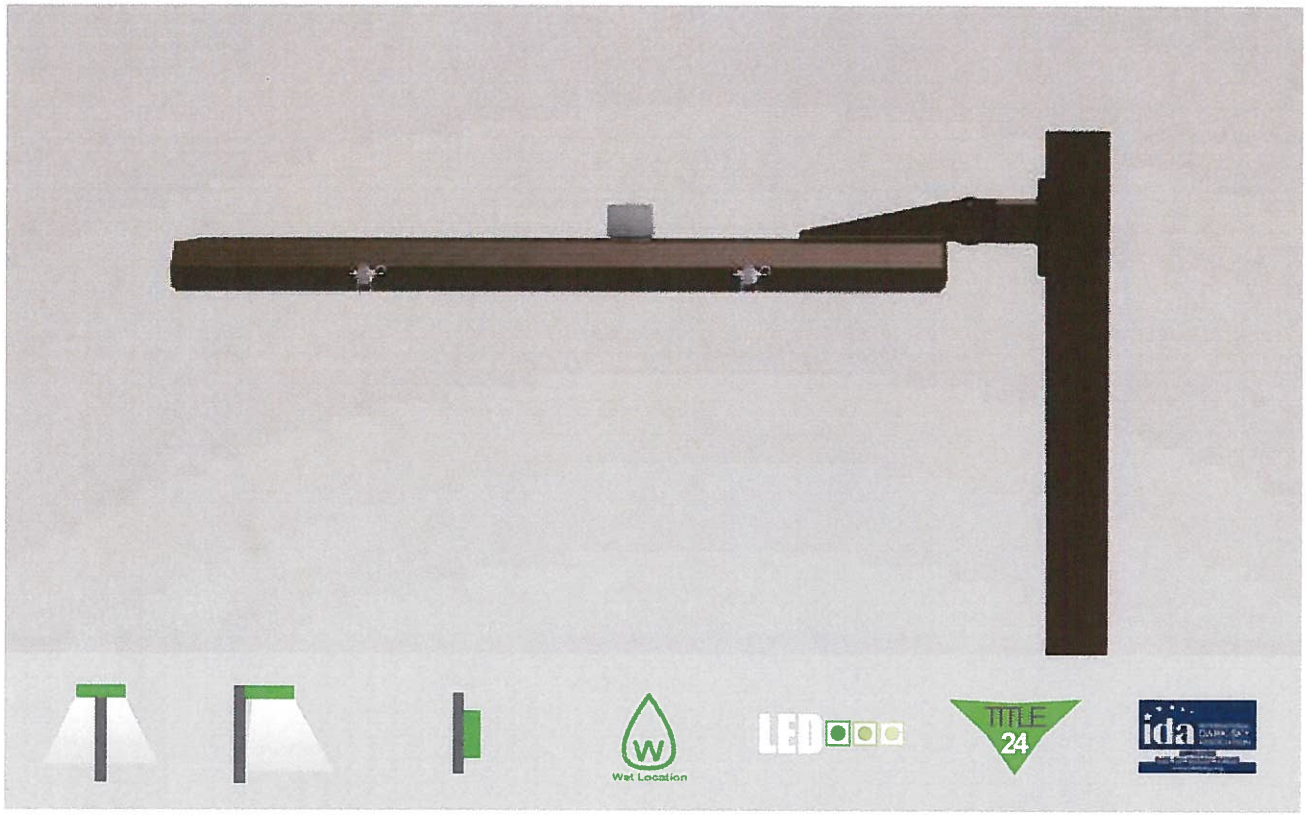

XPX / XCX / XWX — Exterior End Pole, Center Pole & Wall Mount

Dimension:	3"H x 13"W
Lens:	Clear tempered glass
Construction:	Solid extruded housing · powdercoated bronze Extruded aluminum door frame · anodized clear
Replaceable LED Modules:	High performance Nichia® LEDs
LED Warranty:	Standard 5-yr warranty on LED components and drivers; inherent dimming 0-10V; > 60,000hr LED life
Standard Color Temperatures:	3000K, 3500K, 4000K, 5000K
Color Rendering:	85 or 90 CRI

		T5HO Equivalent
2ft High Output		
2 Boards:	4,800 lumens at engine, 40 input watts	
3 Boards:	7,200 lumens at engine, 60 input watts	*2L · T5HO*
4 Boards:	9,600 lumens at engine, 80 input watts	*3L · T5HO*
5 Boards:	12,000 lumens at engine, 100 input watts	
6 Boards:	14,400 lumens at engine, 120 input watts	*4L · T5HO*
4ft High Output		
2 Boards:	9,600 lumens at engine, 80 input watts	*3L · T5HO*
3 Boards:	14,400 lumens at engine, 120 input watts	*4L · T5HO*
4 Boards:	19,200 lumens at engine, 160 input watts	
5 Boards:	20,000 lumens at engine, 200 input watts	*6L · T5HO*
6 Boards:	28,800 lumens at engine, 240 input watts	

Certified Independent Testing: IES LM-79 and LM-80 data available; DLC Compliant

Polar - Clear Lens:

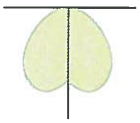

Mount Type:	
E-XP	End pole mount
E-XC	Center pole mount
E-XW	Wall mount
Housing Type / Finish:	
X	Extruded aluminum housing, bronze
Dimension:	
2	Nominal 2' long x 13" wide
4	Nominal 4' long x 13" wide
LED boards in cross section:	
2	(2) LED boards
3	(3) LED boards
4	(4) LED boards
5	(5) LED boards
6	(6) LED boards
Color Temperature:	
L30	LED 3000k
L35	LED 3500k
L40	LED 4000k
L50	LED 5000k
Output:	
LH	LED high output (1200 lumens/ft, 10w/ft x #boards)
Shielding:	
G	Tempered glass lens
Voltage:	
U	Universal 120V - 277V
Reflector:	
E	Enhanced aluminum 95% reflective
Distribution:	
B	Broad distribution
N	Narrow distribution (for 30ft + heights)
Options:	
P	Photocell
C	Shorting cap
RH	Non-standard right side door hinge (XPX only)
O	Occupancy sensor (3.5" longer body, up to 20° tilt)
9	90+ CRI for Title 24

Pole mount: Mounts are adjustable in increments of 5°. Order separately.
Wall mount: Includes adjustable bracket.

BOW SX LED

Project Name:	Catalog Number:	Type

AREA

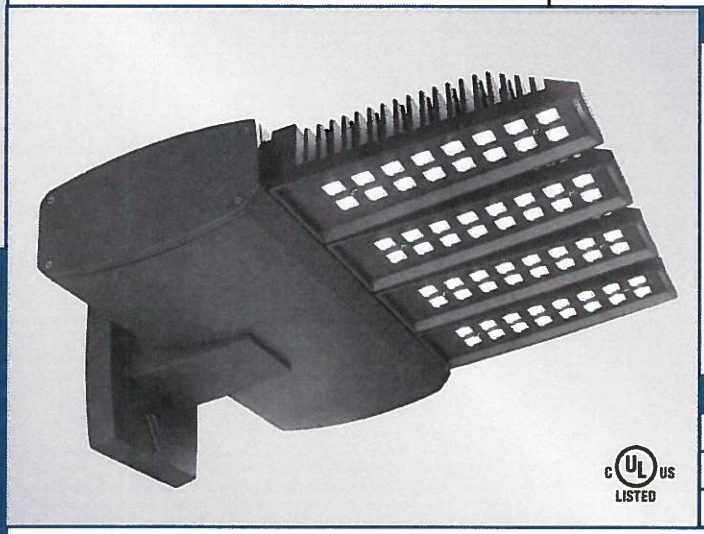

c UL us LISTED

Dimensional Drawings

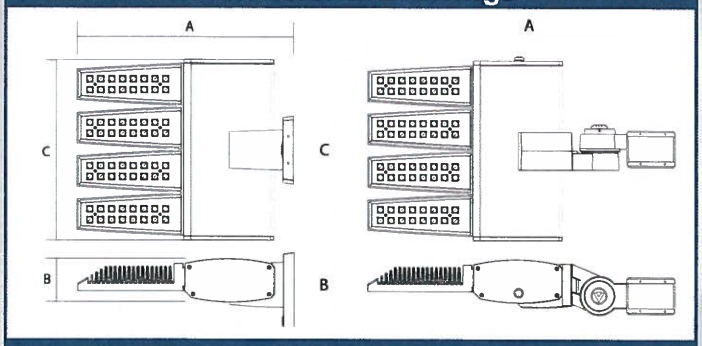

Fixture	A	B	C	Max. Watts	Lbs
BSX-2	20" or 28.5"	5"	8.75"	111	15
BSX-3	20" or 28.5"	5"	12.75"	166	19
BSX-4	20" or 28.5"	5"	16.75"	222	24

The new BOW SX LED Series continues the unique contemporary design inspired by the sleek styling of the BOW family. Separating the extruded aluminum driver housing and the individual die-cast aluminum linear LED engines: optimize the life of the LEDs and the Driver(s); and maximizes the lumen output of the fixture.

Each of the individual LED light engines come with 16 LEDs; for a max total of 64 LEDs. Eight optical distribution patterns are available.

Available in 4000 or 5000 Kelvin temperature.

A durable polyester powder coat finish is guaranteed for five years; and is available in standard or custom colors.

The BOW SX LED series is an exceptional choice for shopping centers, schools, office buildings, and general area lighting.

Model	Optics	Source	Current	Kelvin	Voltage	Mounting	Finish	Options
BSX-2 **BSX-3** **BSX-4**	Type I **(T1)** Type II **(T2)** Type III **(T3)** Type IV **(T4)** Type V **(T5)** Type V-W **(T5W)**	# Of LEDs 32 **(32LC)** 48 **(48LC)** 64 **(64LC)**	mA 350 **(3)** 530 **(5)** 700 **(7)** 1000* **(10)** *Test Data Pending, 1 Amp is not DLC listed	4000K *Neutral white **(4K)** 5000K *Cool white **(5K)**	120-277 *Universal Voltage **(UNV)** 480 **(5)** 347 **(8)**	Knuckle Mount *Slips over 2 3/8" Tenon with adjustable Increments of 10° **(KM)** Bolt-On Arm 6" **(BOA6)** Wall Mount **(WM)** Adjustable Wall Mount **(UWM)** NOTE: UNIT IS ADJUSTABLE FROM HORIZONTAL TO 90° UPWARD MAX WITH THE KNUCKLE MOUNT.	Bronze **(BZ)** Black **(BK)** Smooth Black **(SBK)** White **(WH)** Smooth White **(SWH)** Graphite **(GP)** Grey **(GY)** Silver Metallic **(SL)** Custom Color **(CC)**	Button Type Photocell *Specify voltage. **(PC120) (PC208) (PC240) (PC277)** Photocell & Receptacle *Specify voltage **(PCR120) (PCR208) (PCR240) (PCR277)** *Only available in BSX-3 or BSX-4 Photo Receptacle **(PER)** *With shorting cap *Only available in BSX-3 or BSX-4 Round Pole Plate Adaptor For 4"Ø Pole **(RPP4)** For 5"Ø Pole **(RPP5)** 0-10 Volt Dimming Driver **(DIM)** Motion Sensor *Works with FSP-211 **(WSC-8)** 8' Mounting Height **(WSC-20)** 9-20' Mounting Height **(WSC-40)** 21-40' Mounting Height

For more detailed information on mounting, wiring or installation instructions, please consult factory. If poles are not ordered with fixtures, please specify mounting requirements. This document contains proprietary information of Visionaire Lighting LLC. Any use of this information requires the written approval of Visionaire Lighting, LLC. In keeping with our TQM policy of continuous improvement, Visionaire reserves the right to change any specifications contained herein without prior notice.

VISIONAIRE LIGHTING
Performance In A Whole New Light®

BOW SX LED

Housing

• The LED light engines are constructed of heavy-duty, die-cast aluminum, with external heat radiating fins.

Driver Compartment

• The separate driver housing is constructed of extruded aluminum, with cast aluminum end covers and stainless steel fasteners; for easy access to the LED driver(s); allowing for cooler operation and longer driver life. One-piece gasketing is utilized throughout the fixture for weather tight operation.

Thermal Management

• The BOW SX Series provides excellent overall thermal management by maximizing the fixture's heat sink capabilities. This enables the BOW SX Series to withstand higher ambient temperatures and drive currents without degrading LED life.

• The L70 test determines the point in an LEDs life when it reaches 70 percent of its initial output. The BOW SX Series LEDs have been determined to last a minimum of 100,000 hours in 25°C environments when driven at 350 mA.

Optical System

• The highest lumen output, Evo/C LEDs are utilized in the BOW SX Series. IES distribution Types I, II, III, IV, V, V-W, T15 & T40 are available. LED light engines come in multiples of 16 LEDs.

• CRI values are 70.

Quali-Guard® Finish

• The finish is a Quali-Guard® textured, chemically pretreated through a multiple-stage washer, electrostatically applied, thermoset polyester powder coat finish, with a minimum of 3-5 millimeter thickness. Finish is oven-baked at 400 °F to promote maximum adherence and finish hardness. All finishes are available in standard and custom colors.

Finish is guaranteed for five (5) years.

Mounting

• An adjustable knuckle slip fits over a 2 3/8" Tenon, and allows for up to 90° degrees of vertical adjustment in 10° degree increments from horizontal, as well as full side to side adjustment with the knuckle mount.

• A round extruded 6" aluminum, Bolt -On Arm (BOA) with an in-pole nut plate. A Round Pole Plate Adapter (RPP) is required for mounting to round poles.

• A cast wall mount plate is available for wall mount applications.

Electrical Assembly

• The BOW SX Series is supplied with a choice of 350, 530, 700, or 1000 mA high-performance LED drivers, that accept 120v thru 480v, 50 Hz to 60 Hz, input. Power factor of 95%. Rated for -40 °C operations.

• 10 kV surge protector supplied as standard.

Warranty

• Five (5) year Limited Warranty on entire system, including finish. For full warranty information, please visit VisionaireLighting.com.

Options

• Button Type Photocell
• Photocell & Receptacle
• Photo Receptacle
• Round pole plate adapter
• 0-10 Volt Dimming Driver
• Motion Sensor

Listings

BOW SX Series is UL Listed, suitable for wet locations.

IP65

Powder Coated Tough™.

POWDER COATED TOUGH™ IP65 RATED c UL us LISTED DLC

DesignLights Consortium (DLC) qualified Product. Some configurations of this product family may not be DesignLights Consortium (DLC) listed, please refer to the DLC qualified products list to confirm listed configurations. http://www.designlights.org/

Bolt-On Arm Detail

BSX BOA Mount Shown

EPA DATA	BSX-2	BSX-3	BSX-4
	.5	.7	.9

BOW SX 5K Lumen Data

# LEDs	mA	Type 1	Type 2	Type 3	Type 4	Type 5	Type 5W	Watts
32	350	3554	3407	3139	3482	4172	3580	35
	530	5264	5046	4649	5157	6179	5302	54
	700	6376	6112	5631	6246	7484	6422	72
	1000**	8135	8304	7651	8487	8913	8726	111
48	350	5293	5073	4674	5185	6213	5331	53
	530	7553	7240	6671	7400	8867	7608	81
	700	9533	9138	8420	9340	11191	9603	110
	1000**	12202	12456	11476	12730	13370	13089	166
64	350	6981	6692	6166	6839	8195	7032	71
	530	9882	9472	8728	9681	11600	9954	106
	700	12555	12035	11089	12301	14738	12647	144
	1000**	16269	16608	15302	16974	17827	17452	222

Visit www.VisionaireLighting.com for up-to-the-minute chart information, including types not listed here.
* For 4000K multiply values by 0.90 **Test data pending.

19645 Rancho Way Rancho Dominguez, CA 90220
Tel: (310) 512-6480 Fax: (310) 512-6486
www.visionairelighting.com

Enjoy flexibility & savings along with quality illumination

LED HIGH BAY
FBX

PHILIPS DAY-BRITE / PHILIPS CFI LED HIGH BAY FBX

The Philips Day-Brite / Philips CFI LED High Bay FBX provides versatility in form and function. With a range of lumen packages, optical distributions, and accessories available, this luminaire can be used in many different applications ranging from warehouses to retail outlets.

Project:
Location:
Catalog No:
Fixture Type:
Mfg: Qty:
Notes:

Ordering guide

example: FBX24LL40-UNV

Family	Lumens	Lamp Source	CCT	Voltage	Optics	Options
FBX		L	—	—	—	
FBX	**08L** 8,000 nominal delivered lumens **12L** 12,000 nominal delivered lumens **16L** 16,000 nominal delivered lumens **20L** 20,000 nominal delivered lumens **24L** 24,000 nominal delivered lumens **36L** 36,000 nominal delivered lumens **45L** 45,000 nominal delivered lumens	**L** LED	**40** 4000K (CRI 80) **50** 5000K (CRI 80)	**UNV** 120-277V **120** 120V **208** 208V **240** 240V **277** 277V **347** 347V **480** 480V	**Blank** General Distribution **N** Narrow **M** Medium **W** Wide **A** Aisle	**WP6** Wired 6' 16/3 Cord & NEMA Twist Lock Plug[56] **WC6** Wired 6' 16/3 Cord **WP6D** Wired 6' 16/3 Cord & NEMA Twist Lock Plug for Line Voltage and Wired 6' 16/3 Cord & Plug for Dimming Control[56] **WC6D** Wired 6' 16/3 Cord for Line Voltage and Wired 6' 16/3 Cord for Dimming Control **MD360** 360° Motion Detector (ON/OFF) **MD360D** 360° Motion Detector (ON/DIM) **EMLED** Emergency Battery (40°C max) **EMLEDC** Emergency Battery Cold Temp (40°C max) **55** High Ambient (55°C – optional for 24,000 lumen or less, required for 36,000 and 45,000 lumens) **LCA** Clear Acrylic Lens **LPA** Prismatic Acrylic Lens **LFA** Frosted Acrylic Lens

Footnotes:
[56] Must specify voltage.

Accessories (order separately)

FBX CHAIN KIT – 54" chains & V brackets
FBX-GRIP5 – 5' cables & V brackets
FBX-GRIP10 – 10' cables & V brackets
FBX-PENHGR – Pendant hanger (Not available for 36,000 or 45,000 lumen versions)
WG-FBX-2N – Wire guard for 8,000 and 12,000 lumen versions
WG-FBX-2W – Wire guard for 16,000, 20,000, and 24,000 lumen versions
WG-FBX-4 – Wire guard for 36,000 and 45,000 lumen versions

Wiring Notes

Standard cords have 3 wires. Consult factory for other cord options.

General Notes

All options factory installed.
All accessories are field installed.
Many luminaire components, such as reflectors, refractors, lenses, sockets, lampholders, and LEDs are made from various types of plastics which can be adversely affected by airborne contaminants. If sulfur based chemicals, petroleum based products, cleaning solutions, or other contaminants are expected in the intended area of use, consult factory for compatibility.

Predicted L_{70} Lifetime

40°C Ambient > 100,000 hours
40°C Ambient = 60,000 hours (for 8Klm and 16Klm)
(based upon LED manufacturer's supplied LM-80 data and in-situ laboratory testing)

PHILIPS Day-Brite PHILIPS CFI

LED HIGH BAY
FBX

Application

- This luminaire can be used to illuminate retail, cold storage, manufacturing, warehousing and many other large indoor spaces with control and precision.

Construction & Features

- Metal housing and reflectors provide excellent thermal transfer to extend component life.
- End holes to attach V bracket for chain or cable hanging.
- May be cable, chain, or pendant mounted.
- 7/8" K.O. at each end of luminaire for wiring or motion detector.
- Polyester powder finish for excellent impact and corrosion resistance.
- LED light engines and drivers are field replaceable.
- 5 Year Limited Warranty.
- Components are RoHS compliant.
- Listed by ETL to meet UL 1598 standards for damp location and -35°C to 40°C ambient. High ambient 55°C is optional.
- Dimming drivers are standard. Control is 0-10V DC.
- Optional motion detector.
- DLC Listing for most variations. Please check the DLC Qualified Products List to confirm (www.designlights.org/QPL).

Dimensions

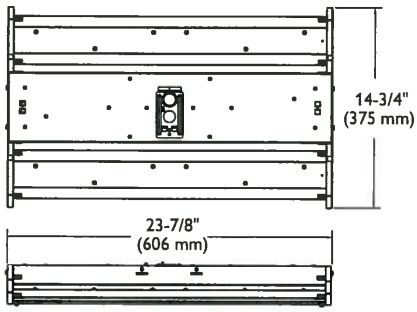

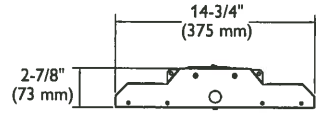

FBX08L
FBX12L

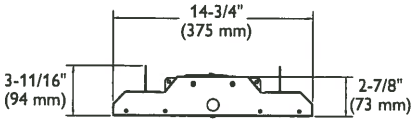

FBX08L high ambient
FBX12L high ambient

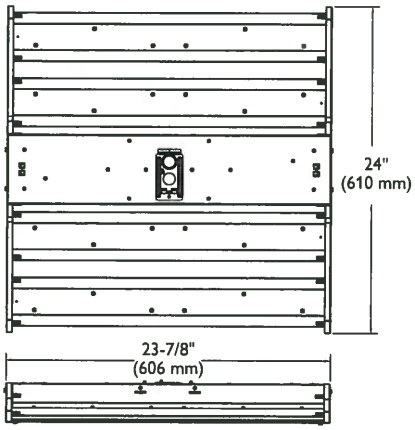

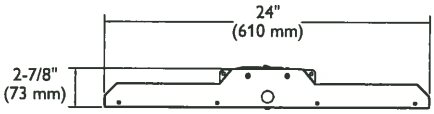

FBX16L
FBX20L
FBX24L

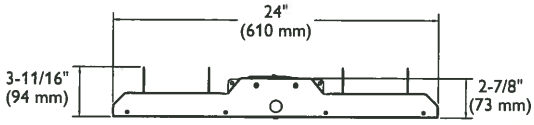

FBX16L high ambient
FBX20L high ambient
FBX24L high ambient

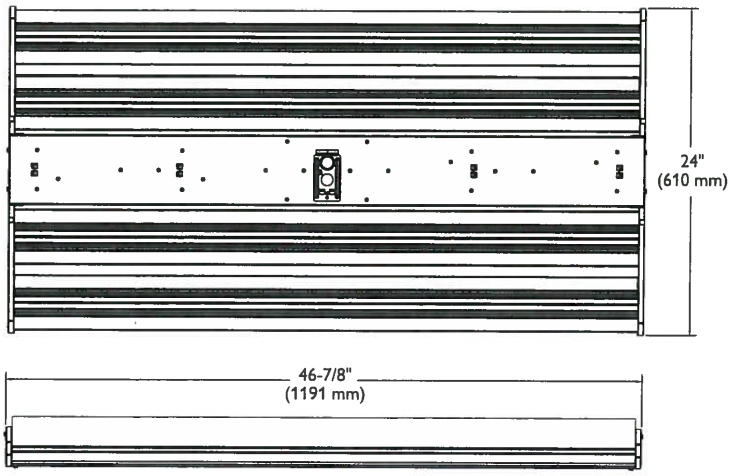

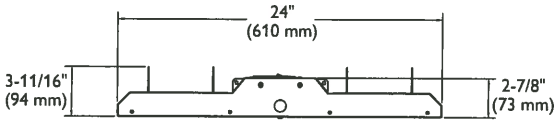

FBX36L
FBX45L

Photometry

LED High Bay FBX, General Distribution, 24,000 nominal delivered lumens

Catalog No.	FBX24LL40-UNV
Test No.	32714
S/MH	1.3
Lamp Type	LED
Lumens	22,277
Input Watts	197
Efficacy	113

Comparative yearly lighting energy cost per 1000 lumens – **$2.12** based on 3000 hrs. and $.08 pwr KWH.

The photometric results were obtained in the Philips Day-Brite laboratory which is NVLAP accredited by the National Institute of Standards and Technology.

Photometric values based on test performed in compliance with LM-79.

Candlepower

Angle	End	45	Cross
0	8056	8056	8056
5	8035	8023	8031
10	7941	7928	7932
15	7775	7777	7825
20	7574	7580	7599
25	7325	7319	7353
30	6989	6985	7031
35	6579	6595	6653
40	6128	6180	6227
45	5560	5668	5728
50	4974	5110	5169
55	4325	4469	4495
60	3637	3814	3076
65	2910	2982	1517
70	2164	1371	523
75	1441	358	338
80	758	258	284
85	219	165	162

Light Distribution

Degrees	Lumens	% Luminaire
0-30	6344	28.5
0-40	10479	47.0
0-60	18777	84.3
0-80	22086	99.1
0-90	22277	100.0

Average Luminance

Angle	End	45°	Cross
45	23804	24270	24523
55	22831	23589	23725
65	20846	21361	10869
75	16859	4188	3952
85	7611	5731	5631

Coefficients of Utilization

EFFECTIVE FLOOR CAVITY REFLECTANCE 20 PER (pfc=0.20)

pcc	80			70			50	
pw	70	50	30	70	50	30	50	30
RCR								
0	119	119	119	116	116	116	111	111
1	110	105	101	107	103	100	99	96
2	100	92	86	98	91	85	87	82
3	92	82	74	89	80	73	77	71
4	84	72	64	82	71	63	69	62
5	77	65	56	75	64	55	61	54
6	71	58	49	69	57	49	55	48
7	66	53	44	64	52	44	50	43
8	61	48	40	60	47	39	46	39
9	57	44	36	56	43	36	42	35
10	54	41	33	52	40	33	39	32

LED High Bay FBX, Medium Distribution, 24,000 nominal delivered lumens

Catalog No.	FBX24LL40-UNV-M
Test No.	32706
S/MH	1.4
Lamp Type	LED
Lumens	22,520
Input Watts	197
Efficacy	115

Comparative yearly lighting energy cost per 1000 lumens – **$2.09** based on 3000 hrs. and $.08 pwr KWH.

The photometric results were obtained in the Philips Day-Brite laboratory which is NVLAP accredited by the National Institute of Standards and Technology.

Photometric values based on test performed in compliance with LM-79.

Candlepower

Angle	End	45	Cross
0	13073	13073	13073
5	13171	13134	13136
10	13297	13273	13320
15	13427	13525	13491
20	13432	13902	13734
25	12370	13953	13937
30	10686	12726	13403
35	9205	11072	11401
40	6972	8770	8174
45	3412	5815	4462
50	725	2582	1328
55	699	484	247
60	458	193	169
65	378	145	97
70	303	71	47
75	155	55	44
80	104	17	41
85	25	19	8

Light Distribution

Degrees	Lumens	% Luminaire
0-30	11268	22.6
0-40	17853	79.3
0-60	22231	98.7
0-80	22476	99.8
0-90	22520	100.0

Average Luminance

Angle	End	45°	Cross
45	14608	24899	19104
55	3690	2554	1301
65	2707	1036	698
75	1818	642	514
85	874	653	278

Coefficients of Utilization

EFFECTIVE FLOOR CAVITY REFLECTANCE 20 PER (pfc=0.20)

pcc	80			70			50	
pw	70	50	30	70	50	30	50	30
RCR								
0	119	119	119	116	116	116	111	111
1	113	109	107	110	107	105	103	101
2	106	100	96	104	98	94	95	92
3	99	92	86	97	90	85	88	83
4	93	84	78	91	83	77	81	76
5	87	78	71	86	77	70	75	69
6	82	72	65	80	71	64	69	63
7	77	66	59	75	65	59	64	58
8	72	61	54	71	61	54	59	53
9	68	57	50	67	56	50	55	49
10	64	53	46	63	53	46	52	46

Photometric Test List

Catalog No.	Test No.	Delivered Lumens	Input Watts	Efficacy
FBX08LL40-UNV	32722	7918	82	96
FBX08LL40-UNV-LCA	32719	7695	83	93
FBX08LL40-UNV-LPA	32721	7445	82	91
FBX08LL40-UNV-LFA	32720	6728	82	82
FBX08LL40-UNV-N	32730	7906	83	96
FBX08LL40-UNV-N-LCA	32727	7682	82	94
FBX08LL40-UNV-N-LPA	32729	7458	82	91
FBX08LL40-UNV-N-LFA	32728	6765	82	83
FBX08LL40-UNV-M	32754	7937	82	97
FBX08LL40-UNV-M-LCA	32751	7720	82	94
FBX08LL40-UNV-M-LPA	32753	7457	82	91
FBX08LL40-UNV-M-LFA	32752	6719	82	82
FBX08LL40-UNV-W	32738	7920	82	96
FBX08LL40-UNV-W-LCA	32735	7665	82	94
FBX08LL40-UNV-W-LPA	32737	7372	82	89
FBX08LL40-UNV-W-LFA	32736	6634	82	81
FBX08LL40-UNV-A	32746	7997	83	97
FBX08LL40-UNV-A-LCA	32743	7771	82	94
FBX08LL40-UNV-A-LPA	32745	7431	82	91
FBX08LL40-UNV-A-LFA	32744	6594	82	80

Catalog No.	Test No.	Delivered Lumens	Input Watts	Efficacy
FBX12LL40-UNV	32790	11052	97	113
FBX12LL40-UNV-LCA	32793	10671	97	110
FBX12LL40-UNV-LPA	32791	10310	98	105
FBX12LL40-UNV-LFA	32792	9238	97	95
FBX12LL40-UNV-N	32797	11258	98	115
FBX12LL40-UNV-N-LCA	32794	10999	97	113
FBX12LL40-UNV-N-LPA	32796	10595	98	108
FBX12LL40-UNV-N-LFA	32795	9448	98	97
FBX12LL40-UNV-M	32805	11248	98	115
FBX12LL40-UNV-M-LCA	32802	10905	98	112
FBX12LL40-UNV-M-LPA	32804	10435	98	107
FBX12LL40-UNV-M-LFA	32803	9403	98	96
FBX12LL40-UNV-W	32798	11082	98	113
FBX12LL40-UNV-W-LCA	32801	10775	98	110
FBX12LL40-UNV-W-LPA	32799	10280	97	106
FBX12LL40-UNV-W-LFA	32800	9210	98	94
FBX12LL40-UNV-A-55	33825	12275	97	127
FBX12LL40-UNV-A-55-LCA	33826	11937	97	123
FBX12LL40-UNV-A-55-LPA	33827	11280	97	117
FBX12LL40-UNV-A-55-LFA	33828	9941	97	103

Photometric Test List (continued)

Catalog No.	Test No.	Delivered Lumens	Input Watts	Efficacy
FBX16LL40-UNV	32715	15819	166	95
FBX16LL40-UNV-LCA	32718	15320	166	92
FBX16LL40-UNV-LPA	32716	14758	165	89
FBX16LL40-UNV-LFA	32717	13298	165	81
FBX16LL40-UNV-N	32723	15708	166	95
FBX16LL40-UNV-N-LCA	32726	15314	166	92
FBX16LL40-UNV-N-LPA	32724	14861	166	90
FBX16LL40-UNV-N-LFA	32725	13400	165	81
FBX16LL40-UNV-M	32747	15974	166	96
FBX16LL40-UNV-M-LCA	32750	15484	165	94
FBX16LL40-UNV-M-LPA	32748	14927	165	91
FBX16LL40-UNV-M-LFA	32749	13398	165	81
FBX16LL40-UNV-W	32731	15789	166	95
FBX16LL40-UNV-W-LCA	32734	15358	165	93
FBX16LL40-UNV-W-LPA	32732	14704	165	89
FBX16LL40-UNV-W-LFA	32733	13211	165	80
FBX16LL40-UNV-A	32739	15923	166	96
FBX16LL40-UNV-A-LCA	32742	15587	166	94
FBX16LL40-UNV-A-LPA	32740	14801	166	89
FBX16LL40-UNV-A-LFA	32741	13223	165	80
FBX20LL40-UNV	32806	20191	173	116
FBX20LL40-UNV-LCA	32809	19572	173	113
FBX20LL40-UNV-LPA	32807	18784	173	109
FBX20LL40-UNV-LFA	32808	16908	172	98
FBX20LL40-UNV-N	32821	20179	173	117
FBX20LL40-UNV-N-LCA	32818	19640	172	114
FBX20LL40-UNV-N-LPA	32820	19083	173	111
FBX20LL40-UNV-N-LFA	32819	17203	172	100
FBX20LL40-UNV-M	32814	20304	173	117
FBX20LL40-UNV-M-LCA	32817	19824	173	115
FBX20LL40-UNV-M-LPA	32815	19071	172	111
FBX20LL40-UNV-M-LFA	32816	17102	173	99
FBX20LL40-UNV-W	32813	19984	172	116
FBX20LL40-UNV-W-LCA	32810	19515	172	113
FBX20LL40-UNV-W-LPA	32812	18688	172	109
FBX20LL40-UNV-W-LFA	32811	16793	173	97
FBX20LL40-UNV-A-55	33824	22359	171	131
FBX20LL40-UNV-A-55-LCA	33823	21534	171	126
FBX20LL40-UNV-A-55-LPA	33822	20155	171	118
FBX20LL40-UNV-A-55-LFA	33821	17662	171	104
FBX24LL40-UNV	32714	22277	197	113
FBX24LL40-UNV-LCA	32711	21673	196	111
FBX24LL40-UNV-LPA	32713	20782	197	106
FBX24LL40-UNV-LFA	32712	18697	196	95
FBX24LL40-UNV-N	32707	22412	197	114
FBX24LL40-UNV-N-LCA	32710	21744	196	111
FBX24LL40-UNV-N-LPA	32709	21133	196	108
FBX24LL40-UNV-N-LFA	32708	18976	196	97
FBX24LL40-UNV-M	32706	22520	197	115
FBX24LL40-UNV-M-LCA	32703	21868	197	111
FBX24LL40-UNV-M-LPA	32705	21084	197	107
FBX24LL40-UNV-M-LFA	32704	18952	196	97
FBX24LL40-UNV-W	32699	22309	197	113
FBX24LL40-UNV-W-LCA	32702	21633	197	110
FBX24LL40-UNV-W-LPA	32700	20663	196	105
FBX24LL40-UNV-W-LFA	32701	18621	197	95
FBX24LL40-UNV-A-55	33817	23975	194	124
FBX24LL40-UNV-A-55-LCA	33818	23313	193	121
FBX24LL40-UNV-A-55-LPA	33819	22142	193	115
FBX24LL40-UNV-A-55-LFA	33820	19561	193	101

Catalog No.	Test No.	Delivered Lumens	Input Watts	Efficacy
FBX36LL40-UNV-55	32880	36930	309	120
FBX36LL40-UNV-55-LCA	32879	36047	309	117
FBX36LL40-UNV-55-LPA	32878	34371	308	112
FBX36LL40-UNV-55-LFA	32877	30686	312	98
FBX36LL40-UNV-N-55	32881	37112	314	118
FBX36LL40-UNV-N-55-LCA	32882	36292	316	115
FBX36LL40-UNV-N-55-LPA	32883	35098	314	112
FBX36LL40-UNV-N-55-LFA	32884	31536	310	102
FBX36LL40-UNV-M-55	32888	37525	313	120
FBX36LL40-UNV-M-55-LCA	32887	36491	313	117
FBX36LL40-UNV-M-55-LPA	32886	35091	314	112
FBX36LL40-UNV-M-55-LFA	32885	31526	315	100
FBX36LL40-UNV-W-55	32889	37159	309	120
FBX36LL40-UNV-W-55-LCA	32890	36436	316	115
FBX36LL40-UNV-W-55-LPA	32891	34296	313	110
FBX36LL40-UNV-W-55-LFA	32892	30759	313	98
FBX36LL40-UNV-A-55	33928	39429	307	128
FBX36LL40-UNV-A-55-LCA	33927	38201	307	125
FBX36LL40-UNV-A-55-LPA	33926	36125	307	118
FBX36LL40-UNV-A-55-LFA	33925	32081	306	105
FBX45LL40-UNV-55	32834	45184	398	114
FBX45LL40-UNV-55-LCA	32835	44005	397	111
FBX45LL40-UNV-55-LPA	32836	41962	397	106
FBX45LL40-UNV-55-LFA	32837	37573	397	95
FBX45LL40-UNV-N-55	32833	45393	400	113
FBX45LL40-UNV-N-55-LCA	32832	44094	401	110
FBX45LL40-UNV-N-55-LPA	32831	42801	401	107
FBX45LL40-UNV-N-55-LFA	32830	38515	401	96
FBX45LL40-UNV-M-55	32826	45896	400	115
FBX45LL40-UNV-M-55-LCA	32827	44752	400	112
FBX45LL40-UNV-M-55-LPA	32828	42893	394	109
FBX45LL40-UNV-M-55-LFA	32829	38430	397	97
FBX45LL40-UNV-W-55	32825	45637	398	115
FBX45LL40-UNV-W-55-LCA	32824	44448	398	112
FBX45LL40-UNV-W-55-LPA	32823	41959	396	106
FBX45LL40-UNV-W-55-LFA	32822	37593	399	94
FBX45LL40-UNV-A-55	33921	47957	389	123
FBX45LL40-UNV-A-55-LCA	33922	47104	388	121
FBX45LL40-UNV-A-55-LPA	33923	44092	388	114
FBX45LL40-UNV-A-55-LFA	33924	39066	387	101

©2014 Koninklijke Philips N.V. All rights reserved.
Philips reserves the right to make changes in specifications and/or to discontinue any product at any time without notice or obligation and will not be liable for any consequences resulting from the use of this publication.

philips.com/luminaires

Philips Lighting
North America Corporation
200 Franklin Square Drive
Somerset, NJ 08873
Tel. 855-486-2216

Imported by: Philips Lighting
A division of Philips Electronics Ltd.
281 Hillmount Rd,
Markham, ON Canada L6C 2S3
Tel. 800-668-9008

UR Series - 2ft

2' LED Upgrade Kit

Product Description

The UR Series 2ft (610mm) LED upgrade kit delivers 3600 lumens of enhanced spectrum 80 CRI light while achieving 100 lumens per watt at the system level. This innovative kit is designed for retrofitting existing 1'x2' (305mm x 610mm) or 2'x2' (610mm x 610mm) fixtures to energy saving LED. The UR Series is available in neutral or cool color temperatures and with step dimming or 0-10V dimming. The UR Series upgrade kit is easy to install and fits into almost any existing linear fluorescent fixture making it a perfect upgrade option where energy savings and long life are critical.

2' (610mm) LED Lightbar
MOL- 22" (559mm)

Performance Summary

- Upgrade Existing 1'x2' (305mm x 610mm) or 2'x2' (610mm x 610mm) fixtures
- **Efficacy:** 100 LPW at source level
- **System Delivered Light Output:** 3600 lumens
- **Target Luminaire Delivered Light Output:** 3200 lumens*
- **Input Power:** 36 watts
- **CRI:** 80
- **CCT:** 3500K, 4000K
- **Input Voltage:** 120-277 VAC or 347 VAC
- **Limited Warranty†:** 7 years
- **Lifetime:** Designed to last 50,000 hours
- **Controls:** Step Level to 50% or 0-10V Dimming to 5%
- **Mounting:** Existing linear fluorescent fixtures

Accessories

Field-Installed		
Emergency Backup UR-EB5W – 5W	**Two Lightbar Drivers** UR2-24-36L-S-FD-DR – 120-277V, Step Dimming to 50% UR2-24-36L-10V-FD-DR – 120-277V, 0-10V Dimming to 5% UR2-24-36L-34-10V-FD-DR – 347V, 0-10V Dimming to 5%	**Three Lightbar Drivers** UR3-24-36L-S-FD-DR – 120-277V, Step Dimming to 50% UR3-24-36L-10V-FD-DR – 120-277V, 0-10V Dimming to 5% UR3-24-36L-34-10V-FD-DR – 347V, 0-10V Dimming to 5%

UR2-24™ LED Upgrade Kit:	UR3-24™ LED Upgrade Kit:
(4) Mounting Clips	(6) Mounting Clips
(8) Self-Tapping Screws	(12) Self-Tapping Screws
(1) Driver Screw	(1) Driver Screw
(2) 2' (610mm) LED Lightbars	(3) 2' (610mm) LED Lightbars
(1) LED Driver	(1) LED Driver
(1) Installation Instructions	(1) Installation Instructions
(1) Relamping Label	(1) Relamping Label

Ordering Information

Example: UR2-24-36L-35K-S-FD

	36L				FD
Product	**Lumen Output**	**Color Temp**	**Voltage**	**Control**	**Options**
UR2-24 **UR3-24**	**36L** 36W, 3600 lumens - 100 LPW	**35K** 3500 Kelvin **40K** 4000 Kelvin	**Blank** 120-277 Volt (Standard) **34** 347 Volt (Optional) - Available with 10V control option only	**S** Step Dimming to 50% **10V** 0-10V Dimming to 5%	**FD** 80 CRI **Blank** 1 Kit (Single Pack) **6** Six Kits (UR2-24™ LED Multi Pack) **4** Four Kits (UR3-24™ LED Multi Pack)

* Varies by luminaire
† See www.cree.com/lighting/products/warranty for warranty terms

Rev. Date: V2 08/13/2014

US: www.cree.com/lighting T (800) 236-6800 F (262) 504-5415

Canada: www.cree.com/canada T (800) 473-1234 F (800) 890-7507

Product Specifications

CREE LED TECHNOLOGY

Cree's total systems approach to product development is a comprehensive engineering philosophy that combines the most advanced LED sources, driver technologies, optics and forms. The result is highly-reliable luminaire solutions for both indoor and outdoor applications that reduce energy use, extend lifetimes, and maximize illumination performance and quality.

CONSTRUCTION & MATERIAL

- Lightweight aluminum heat sink housing provides strength and durability
- Durable plastic mounting clips with integrated magnets allow for simple snap on design to fixture
- Shatterproof Design

OPTICAL SYSTEM

- Specialized lens design for optimal light distribution and smooth visual effect
- Measured and designed to achieve optimal light performance in existing fluorescent troffers

ELECTRICAL SYSTEM

- Integral, high-efficiency driver and power supply
- **Power Factor:** = 0.9 nominal
- **Input Power:** Stays constant over life
- **Input Voltage:** 120-277V, 347V, 50/60Hz
- **Temperature Rating:** Designed to operate in temperatures 0-35°C
- **Total Harmonic Distortion:** < 20%

CONTROLS

- Step dimming to 50%*
- Continuous dimming to 5% with 0-10V DC control protocol*

REGULATORY & VOLUNTARY QUALIFICATIONS

- Product qualified on the DesignLights Consortium ("DLC") Qualified Products List ("QPL")
- UL1598C (Retrofit Kit)
- This product is UL Classified for U.S. and Canada for use in existing linear fluorescent fixtures
- Suitable for damp locations
- Designed for Indoor use

* Reference www.cree.com/lighting for recommended dimming controls and wiring diagrams

Photometry

UR2-24-36L-35K-FD INSTALLED IN A 2X2 RECESSED TROFFER BASED ON CSA REPORT TEST #: 2638466-02

Fixture photometry has been conducted by a NVLAP accredited testing laboratory in accordance with IESNA LM-79-08. IESNA LM-79-08 specifies the entire luminaire as the source resulting in a fixture efficiency of 100%.

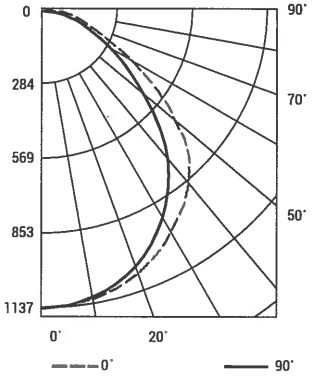

Coefficients Of Utilization - Zonal Cavity Method

RC %:	80			
RW %:	70	50	30	10
RCR: 0	119	119	119	119
1	109	105	101	97
2	100	92	86	80
3	92	82	74	68
4	84	73	65	58
5	78	65	57	50
6	72	59	51	44
7	67	54	45	39
8	62	49	41	35
9	58	45	37	32
10	55	42	34	29

Effective Floor Cavity Reflectance: 20%

Average Luminance Table (cd/m2)

Vertical Angle \ Horizontal Angle	0°	45°	90°
45°	3899	3470	3152
55°	3288	2936	2503
65°	2397	2118	2006
75°	2110	1563	1731
85°	2318	2027	1899

Zonal Lumen Summary

Zone	Lumens	% Lamp	Luminaire
0-30	880.4	N/A	30.8%
0-40	1431.1	N/A	50.0%
0-60	2398.9	N/A	83.8%
0-90	2860.1	N/A	100%
0-180	2861.0	N/A	100%

Reference www.cree.com/lighting for detailed photometric data

© 2014 Cree, Inc. and/or one of its subsidiaries. All rights reserved. For informational purposes only. Content is subject to change. See www.cree.com/patents for patents that cover these products. Cree® and the Cree logo are registered trademarks, and UR2-24™, UR3-24™, and the Quick Ship logo are trademarks of Cree, Inc. The UL logo is a registered trademark of UL LLC. The DesignLights Consortium logo and the DLC QPL Listed logo are registered trademarks of Northeast Energy Efficiency Partnerships, Inc.

US: www.cree.com/lighting T (800) 236-6800 F (262) 504-5415

Canada: www.cree.com/canada T (800) 473-1234 F (800) 890-7507

LED Retrofit Kit

Small – 25 Watt

TYPE:	ORDERING CODE:	APPROVAL:
JOB:		DATE:

Specifications

LED LIGHT ENGINE	(1) Bridgelux LED array chip (1) Extruded aluminum heat sink (1) LED holder w/ protective polycarbonate lens (1)Thermal interface compound (1) 24 VAC Air circulation fan (2,100rpm max, 34 cfm max, 26dbA max)
DRIVER	AC-to-DC constant current Class 2 power supply
UNIVERSAL MOUNTING BRACKET	Galvanized steel. Multiple mounting configurations allow for perfect placement in many standard housings. Swivel yoke allows for perfect aiming.
FASTENERS	Steel, non-corrosive bright zinc plate
WEIGHT	Complete package: 2.3 lb (36.8 oz) LED Light Engine assembly w/ yoke = .90 lb (14.4 oz) Driver = .85 lb (13.6 oz) Main bracket = .55 lb (8.8 oz)
INPUT VOLTAGE	100 – 240Vac, 0.5A or 277Vac, 0.2A @ 50/60Hz
ELECTRICAL CONNECTION	Hard wire into electrical, existing connection. Molex polarized 3 pin connector plugs between Light Engine and Driver
POWER CONSUMPTION	25 Watts (typical)
OPTICAL SYSTEM	Very wide flood 120° beam spread
INITIAL LUMEN OUTPUT	2200 Lumen (typical)
CRI	>70
CCT	5000K
EFFICACY	90 lpw (typical)
LAMP LIFE	50,000 hours to 70% lumen maintenance
LOCATION / IP RATING	Dry location only. Complete installation exposure rating is dependent upon the integrity of the existing enclosure.
ETL CLASS	LED retrofit class, ETL listed for North America Recognition label
OPERATING TEMP RANGE	-20°C to 50°C

NOW LESS WATTS SAME LUMEN OUTPUT

DLC QPL DLC LISTED ™

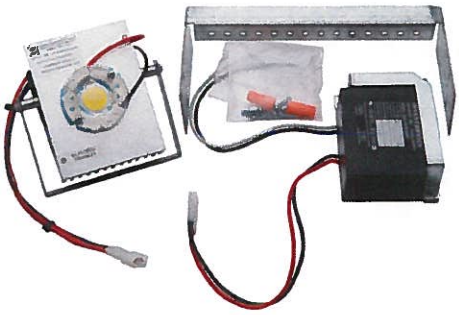

NOTE: Drilling through the enclosure wall is not required or recommended, thus preserving the original IP / outdoor rating of the enclosure.

LED Retrofit Kit - Wallpack — Ordering Guide

_____ -	_____ -	_____
Model	**Color Temp**	**Beam Spread**	**Size**
LEDRFK	**DW** 70 CRI, 5000K	**VFL** 120° Beam	**SM** Small

© 2014 **Energy Focus, Inc.** 32000 Aurora Road, Suite B Solon, OH 44139 tel **440.715.1300** 800.327.7877 fax 440.715.1301 **www.energyfocusinc.com**
All Rights Reserved. Energy Focus, Inc. reserves the right to changes specifications for product improvement without prior notice.

LED Retrofit Kit

Small – 25 Watt

Specifications

LEDWP-656VFL-RFK

Lighting Facts
LEDWP-656VFL-RFK

Lumen output	2,297
Wattage	25
Efficacy	91 lm/W
CRI	70
CCT	5,000 K

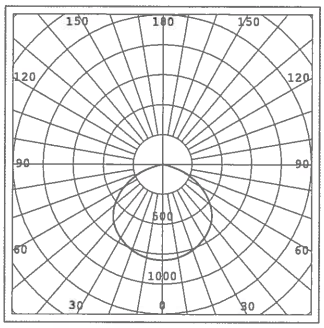

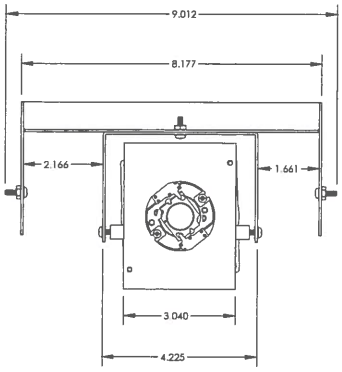

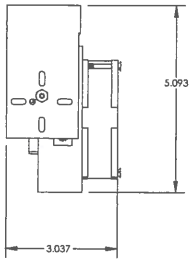

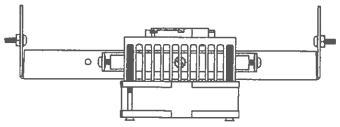

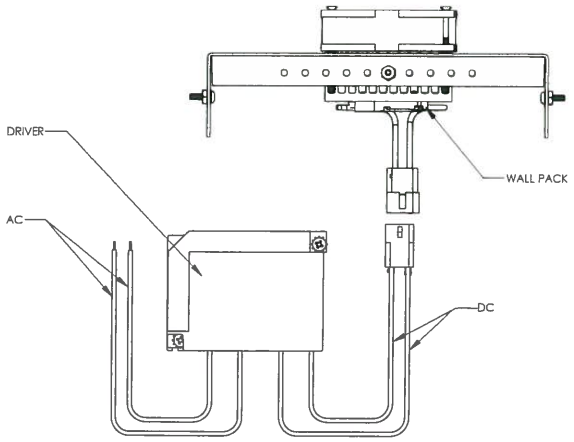

SCHEMATIC

Zonal Lumen Summary per IES publication TM-15-07

FORWARD LIGHT	LUMENS	% OF LUMINAIRES
Forward Low Zone (0 to 30 Deg.)	317.04	13.8%
Forward Mid Zone (30 to 60 Deg.)	638.68	27.8%
Forward High Zone (60 to 80 Deg.)	190.68	8.3%
Forward Very High Zone (80 to 90 Deg.)	2.30	0.1%
	1148.70	**50.0%**
BACK LIGHT		
Back Light Low Zone (0 to 30 Deg.)	317.04	13.8%
Back Light Mid Zone (30 to 60 Deg.)	638.68	27.8%
Back Light High Zone (60 to 80 Deg.)	190.68	8.3%
Back Light Very High Zone (80 to 90 Deg.)	2.30	0.1%
	1148.70	**50.0%**
UPLIGHT		
Uplight Low Zone (90 to 100 Deg.)	0.00	0.0%
Uplight High Zone (100 to 180 Deg.)	0.00	0.0%

IES"BUG" Rating per IES TM-15-11

BACK LIGHT	LUMENS	SECONDARY SOLID ANGLE RATING
BH (60-80 Deg.)	190.4	B 1
BM (30-60 Deg.)	638.9	B 1
BL (0-30 Deg.)	318.0	B 1
UPLIGHT		
UH (100-180 Deg.)	0.0	U 0
UL (90-100 Deg.)	0.0	U 0
GLARE LIGHT		
FVH (80-90 Deg.)	1.4	G 0
BVH (80-90 Deg.)	1.4	G 0
FH (60-80 Deg.)	190.4	G 0
BH (60-80 Deg.)	190.4	G 0

IES BUG RATING: B1 U0 G0

© 2014 **Energy Focus, Inc.** 32000 Aurora Road, Suite B Solon, OH 44139 tel **440.715.1300** 800.327.7877 fax 440.715.1301 **www.energyfocusinc.com**
All Rights Reserved. Energy Focus, Inc. reserves the right to changes specifications for product improvement without prior notice.

Changing the World, One Bulb at a Time.

TRULY GREEN SOLUTIONS

LED UNIVERSAL LIGHT

Features & Benefits:

-High Efficiency Samsung LED
-360 Degree Beam Angle
-IP64 Rated For Outdoor Use
-50,000+ Hour Life
-100% Recyclable
-Best In Class Thermal Management
-Easy Installation Process
-> 85 CRI

Applications:

-Outdoor Area Lighting
-Bollard
-Post Top
-Wall Pack
-Security Lighting
-Globe
-Acorn
-Lantern

360º Beam Angle

Flame Resistant Material

-30~+65ºC Operating Temperature

IP64 WaterProof

Internal Driver

CE RoHS Compliant FC c UL us LISTED TÜVRheinland CERTIFIED LM 79 LM 80 lighting design lab 5 Year Warranty

Due to advancements in technology, specifications are subject to change without notice.
All images are copyright Truly Green Solutions, Inc. and may be only be used with permission.

WARNING: READ INSTRUCTIONS BEFORE INSTALLING
Disconnect all power sources to the fixtures before installing.

www.trulygreensolutions.com | info@trulygreensolutions.com P: 818.206.4404 | F: 866.577.5302

Changing the World, One Bulb at a Time.

TRULY GREEN SOLUTIONS

LED UNIVERSAL LIGHT

	27W	36W	45W	54W
Product Model	**31081**	**31082**	**31083**	**31084**
Comparable To CFL	100W	150W	170W	200W
Technical Parameters	27W	36W	45W	54W
Input Voltage	AC 100~277V	AC 100~277V	AC 100~277V	AC 100~277V
Power Frequency	50~60Hz	50~60Hz	50~60Hz	50~60Hz
Total Power Consumption	27W	36W	45W	54W
LED Power Consumption	27W	36W	45W	54W
LED Chip	90pcs	117pcs	144pcs	180pcs
Power Factor	≥0.95	≥0.95	≥0.95	≥0.95
Luminous Flux(IES)	2900 lm	3800 lm	4700 lm	5600 lm
CRI	>85	>85	>85	>85
Colour Temperature	3000~5300K	3000~5300K	3000~5300K	3000~5300K
Beam Angle	360°	360°	360°	360°
IP Rating	IP64	IP64	IP64	IP64
Operating Temperature	-30°C~65°C(-22 to 149°F)	-30°C~65°C(-22 to 149°F)	-30°C~65°C(-22 to 149°F)	-30°C~65°C(-22 to 149°F)
Lumen Maintenance	50,000Hrs	50,000Hrs	50,000Hrs	50,000Hrs
Light Fixture Material	Aluminum Base	Aluminum Base	Aluminum Base	Aluminum Base
Dimensions(L×W×H)	204x90x92.8mm [E27] 214x90x92.8mm [E40]	234×120×92.8mm [E27] 244×120×92.8mm [E40]	264×151×92.8mm [E27] 274×151×92.8mm [E40]	264×151×92.8mm [E27] 274×151×92.8mm [E40]
Sockets Base	E26 / E27 / E39 / E40	E26 / E27 / E39 / E40	E39 / E40	E39 / E40

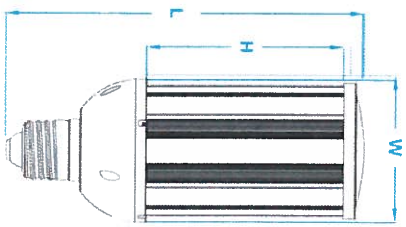

Due to advancements in technology, specifications are subject to change without notice.
All images are copyright Truly Green Solutions, Inc. and may be only be used with permission.

WARNING: READ INSTRUCTIONS BEFORE INSTALLING

Disconnect all power sources to the fixtures before installing.

www.trulygreensolutions.com I info@trulygreensolutions.com P: 818.206.4404 I F: 866.577.5302

Changing the World, One Bulb at a Time.

TRULY GREEN SOLUTIONS

Cost Effective

The best choice in reducing the effects of surging power costs across over world.

Saves up to 74% of power compared to Compact Fluorescent Light / HID.

Power Consumption	Lumens	Comparable CFL/ HID	Energy Saving
27W	2900 lm	100W	73%
36W	3800 lm	150W	76%
45W	4700 lm	170W	74%
54W	5600 lm	200W	73%

LED

LED Universal Light Replaces CFL / HID

CFL / HID

UNIVERSAL LIGHT 27W > CFL / HID 100W

UNIVERSAL LIGHT 36W > CFL / HID 150W

UNIVERSAL LIGHT 45W > CFL / HID 170W

UNIVERSAL LIGHT 54W > CFL / HID 200W

Due to advancements in technology, specifications are subject to change without notice.

All images are copyright Truly Green Solutions, Inc. and may be only be used with permission.

WARNING READ INSTRUCTIONS BEFORE INSTALLING

Disconnect all power sources to the fixtures before installing.

www.trulygreensolutions.com | info@trulygreensolutions.com P: 818.206.4404 | F: 866.577.5302

TRULY GREEN SOLUTIONS

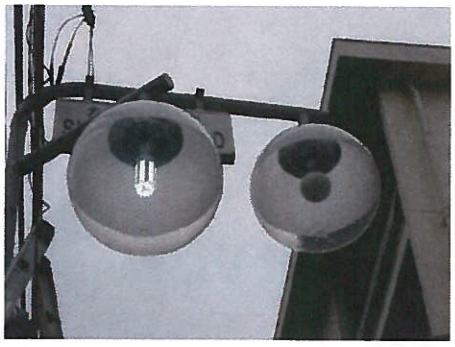

Ordering Information – LED UNIVERSAL LIGHT 27W

310811 LED Universal Light 27W Day White
310812 LED Universal Light 27W Natural White
310813 LED Universal Light 27W Warm White

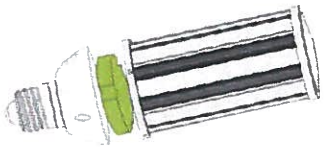

Ordering Information – LED UNIVERSAL LIGHT 36W

310821 LED Universal Light 36W Day White
310822 LED Universal Light 36W Natural White
310823 LED Universal Light 36W Warm Whiter

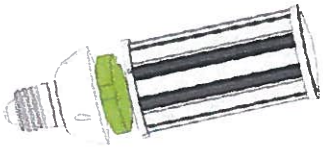

Ordering Information – LED UNIVERSAL LIGHT 45W

310831 LED Universal Light 45W Day White
310832 LED Universal Light 45W Natural White
310833 LED Universal Light 45W Warm Whiter

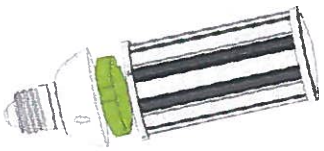

Ordering Information – LED UNIVERSAL LIGHT 54W

310841 LED Universal Light 54W Day White
310842 LED Universal Light 54W Natural White
310843 LED Universal Light 54W Warm Whiter

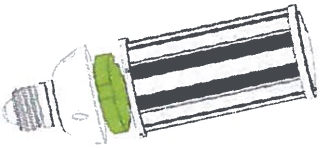

Due to advancements in technology, specifications are subject to change without notice.
All images are copyright Truly Green Solutions, Inc. and may be only be used with permission.

WARNING: READ INSTRUCTIONS BEFORE INSTALLING
Disconnect all power sources to the fixtures before installing.

www.trulygreensolutions.com | info@trulygreensolutions.com P: 818.206.4404 | F: 866.577.5302

Alumen8E

RKS

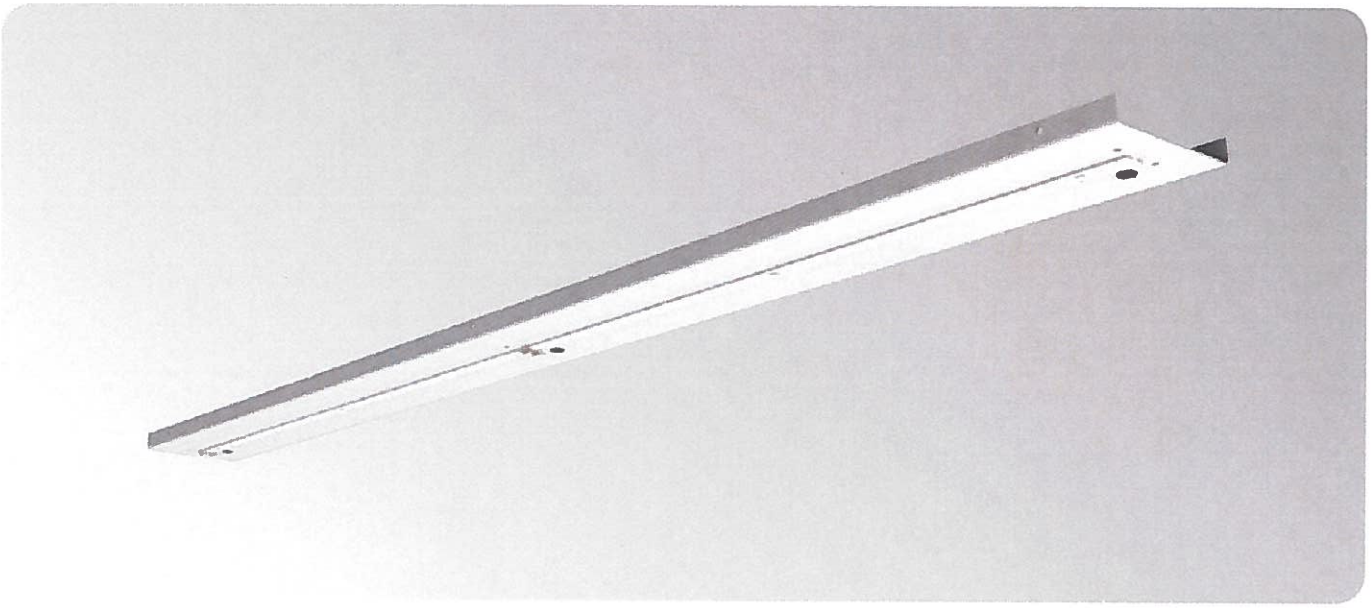

- 1-piece kit
- Retrofit any strip or industrial
- .060 heavy-duty aluminum
- Indicate channel width
- Tunable LED wattage
- Optional reflector
- Optional diode diffusing lens

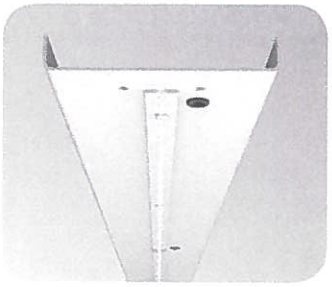

Dimensions

1-piece kit

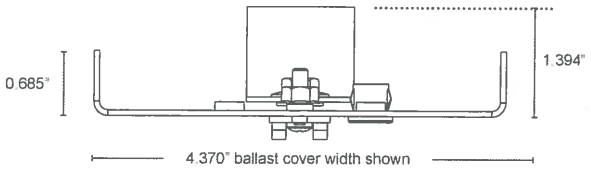

Kits may be manufactured to
accommodate any width.
Add channel width to part number.

KIT

DIRECT

LED

RKS

LED STRIP / INDUSTRIAL RETROFIT SYSTEM

Applications
Any application with existing T8 or T5 strip or industrial luminaires requiring economical and simple retrofit to LED.

Distribution
Direct.

Construction
.060 heavy-duty aluminum. Retrofit kit includes LED driver, one or two LED engine boards in cross section with modular plug-in. 1-piece kit. Ready for installation over any existing strip fixture.

Dimension
Individual retrofit kits - Luminaires are available in 48" increments. Measure existing channel width and add to nomenclature to ensure proper fit.

Mounting
Retrofit into any existing strip fixture. Kit bolts directly to existing housing.

Shielding Options
Optional Reflectors: - White or enhanced MIRO reflectors provide cut-off.

HTLO™ lens - High transmission diode obfuscating lens evenly distributes the LED pattern.

Diodes
LED - High performance Nichia® LED's. Choose 3000k, 3500k, 4000k or 5000k color temperatures. Color rendering is 85+ CRI.

Lumen Output
High Output: lumens at engine, 3500k
4ft, 1 board = 40w, 4800
4ft, 2 boards = 80w, 9600

Wattage is ***tunable*** from a maximum of 100% of maximum wattage (*shown above*), down to 25%. Enter required wattage as a whole number under "Factory-Tuned Wattage" in nomenclature.
IE: 23W. In this instance, factory will tune driver as close as possible to the output of 23watts, equaling approximately 2760 lumens.

Driver
LED - Class 2 power supply, 12VDC, constant current. Inherent 0-10V dimming. Emergency ballast available.

LED Warranty
Standard 5 yr warranty on LED components and universal voltage driver combination. 60,000hr LED life. Complies with IES LM-79 and LM-80.

Finish
Electrostatically applied post powder coat finish in gloss white.

Listing
UL/CUL. Damp location.

E-RKS	Project	Type	Quantity

	Dimension:	
	14	Nominal 4' long
	18	Nominal 8' long
	LED Boards in Cross:	
	1	(1) LED board in cross section
	2	(2) LED boards in cross section
	LED Color:	
	L30	LED 3000k
	L35	LED 3500k
	L40	LED 4000k
	L50	LED 5000k
	Driver:	
	LH	LED high output
	Factory-Tuned Wattage:	
	___W	*Enter wattage to the nearest whole number:* Min. Max. 1x4, 1 board: enter whole number between: 10w to 40w 1x8, 1 board: enter whole number between: 20w to 80w 1x4, 2 boards: enter whole number between: 10w to 80w 1x8, 2 boards: enter whole number between: 20w to 160w
	Voltage:	
	U	Universal 120V - 277V (factory standard)
	H	Universal 347V - 480V
	1	120V
	2	277V
	3	347V
	4	480V
	1B	Emergency ballast 120V
	2B	Emergency ballast 277V
	Channel Width:	
	C___	Enter channel width to the nearest 1/8th of an inch
	Reflector:	
	N	No reflector
	E	Enhanced aluminum 95% reflective
	W	White aluminum 90%+ reflective
	Options:	
	H	HTLO™ lens (choose reflector E or W above)

Retrofit

V.2.2014

Made In The USA

Alumen8

RKC

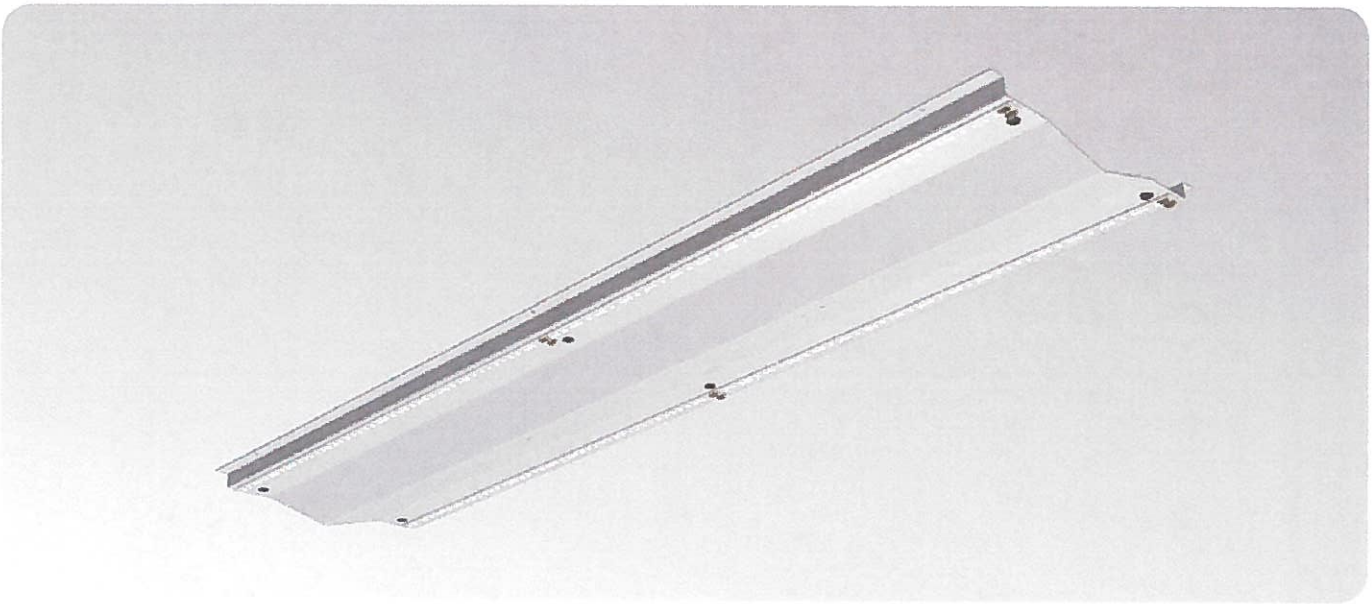

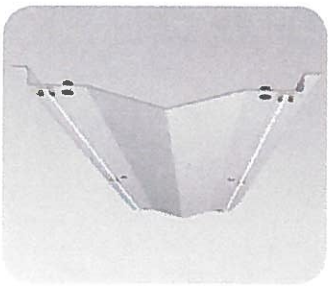

- Economical
- 1-piece kit
- Retrofit any 2x2 or 2x4 troffer
- .040 aluminum
- Tunable LED wattage

Dimensions

1-piece kit

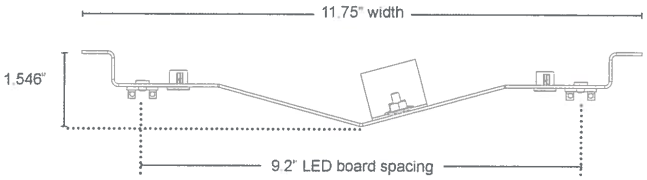

KIT

DIRECT

LED

RKC

ECONOMICAL LED TROFFER RETROFIT SYSTEM

Applications
Any application with existing 2'x2' or 2'x4' luminaires requiring economical and simple retrofit to LED.

Distribution
Direct. Photometrics are dependent upon existing lens.

Construction
.040 aluminum. Retrofit kit includes LED driver compartment, one or two LED engine rails with modular plug-in. 1-piece kit. Ready for installation into any 2'x2' or 2'x4' existing fixture.

Dimension
Individual retrofit kits - Luminaires are available as individual 2' and 4' nominal length kits.

Mounting
Retrofit into any existing 2'x2' or 2'x4' troffer. Kit bolts directly to existing housing.

Diodes
LED - High performance Nichia® LED's. Choose 3000k, 3500k, 4000k or 5000k color temperatures. Color rendering is 85+ CRI.

Lumen Output
High Output: lumens at engine, 3500k

2ft, 1 board = 20w, 2400
4ft, 1 board = 40w, 4800
2ft, 2 board = 40w, 4800
4ft, 2 boards = 80w, 9600

Wattage is ***tunable*** from a maximum of 100% of maximum wattage (*shown above*), down to 25%. Enter required wattage as a whole number under "Factory-Tuned Wattage" in nomenclature.
IE: 23W. In this instance, factory will tune driver as close as possible to the output of 23watts, equaling approximately 2760 lumens.

Driver
LED - Class 2 power supply, 12VDC, constant current. Inherent 0-10V dimming. Emergency ballast available.

LED Warranty
Standard 5 yr warranty on LED components and universal voltage driver combination. 60,000hr LED life. Complies with IES LM-79 and LM-80.

Finish
Electrostatically applied post powder coat finish in gloss white.

Listing
UL/CUL. Damp location.

E-RKC	Project	Type	Quantity

Dimension:		
	22	Nominal 2' long x 11.75" wide
	24	Nominal 4' long x 11.75" wide
LED Boards in Cross:		
	1	(1) LED board in cross section
	2	(2) LED boards in cross section
LED Color:		
	L30	LED 3000k
	L35	LED 3500k
	L40	LED 4000k
	L50	LED 5000k
Driver:		
	LH	LED high output
Factory-Tuned Wattage:		
	___W	*Enter wattage to the nearest whole number:* Min. Max. 2x2, 1 board: enter whole number between: 10w to 20w 2x4, 1 board: enter whole number between: 20w to 40w 2x2, 2 boards: enter whole number between: 10w to 40w 2x4, 2 boards: enter whole number between: 20w to 80w
Voltage:		
	U	Universal 120V - 277V (factory standard)
	H	Universal 347V - 480V
	1	120V
	2	277V
	3	347V
	4	480V
	1B	Emergency ballast 120V
	2B	Emergency ballast 277V

Retrofit

V.2.2014

Made In The USA

LED Retrofit Kit

Meduim – 50 Watt

TYPE:	ORDERING CODE:	APPROVAL:
JOB:		DATE:

Specifications

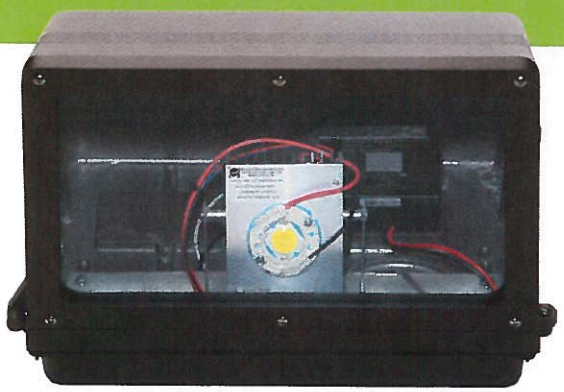

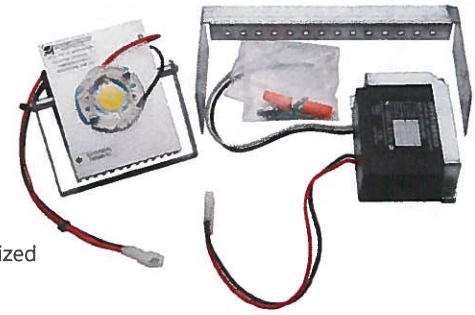

LED LIGHT ENGINE	(1) Bridgelux LED array chip (1) Extruded aluminum heat sink (1) LED holder w/ protective polycarbonate lens (1)Thermal interface compound (1) 24 VAC Air circulation fan (2,100rpm max, 34 cfm max, 26dbA max)
DRIVER	AC-to-DC constant current Class 2 power supply
UNIVERSAL MOUNTING BRACKET	Galvanized steel. Multiple mounting configurations allow for perfect placement in many standard housings. Swivel yoke allows for perfect aiming.
FASTENERS	Steel, non-corrosive bright zinc plate
WEIGHT	Complete package: 2.3 lb (36.8 oz) LED Light Engine assembly w/ yoke = .90 lb (14.4 oz) Driver = .85 lb (13.6 oz) Main bracket = .55 lb (8.8 oz)
INPUT VOLTAGE	100 – 240Vac, 0.5A or 277Vac, 0.2A @ 50/60Hz
ELECTRICAL CONNECTION	Hard wire into electrical, existing connection. Molex polarized 3 pin connector plugs between Light Engine and Driver
POWER CONSUMPTION	50 Watts (typical)
OPTICAL SYSTEM	Very wide flood 120° beam spread
INITIAL LUMEN OUTPUT	4870 Lumen (typical)
CRI	>70
CCT	5000K
EFFICACY	95 lpw (typical)
LAMP LIFE	50,000 hours to 70% lumen maintenance
LOCATION / IP RATING	Dry location only. Complete installation exposure rating is dependent upon the integrity of the existing enclosure.
ETL CLASS	LED retrofit class, ETL listed for North America Recognition label
OPERATING TEMP RANGE	-20°C to 50°C

NOTE: Drilling through the enclosure wall is not required or recommended, thus preserving the original IP / outdoor rating of the enclosure.

LED Retrofit Kit - Wallpack — Ordering Guide

_____ -	_____ -	_____
Model	**Color Temp**	**Beam Spread**	**Size**
LEDRFK	**DW** 70 CRI, 5000K	**VFL** 120° Beam	**MD** Medium

© 2014 **Energy Focus, Inc.** 32000 Aurora Road, Suite B Solon, OH 44139 tel **440.715.1300** 800.327.7877 fax 440.715.1301 **www.energyfocusinc.com**
All Rights Reserved. Energy Focus, Inc. reserves the right to changes specifications for product improvement without prior notice.

LED Retrofit Kit

Meduim – 50 Watt

Specifications

LEDWP-656VFL-RFK

Lighting Facts
LEDWP-656VFL-RFK

Lumen output	4,345
Wattage	54
Efficacy	80.46 lm/W
CRI	73
CCT	5,000 K

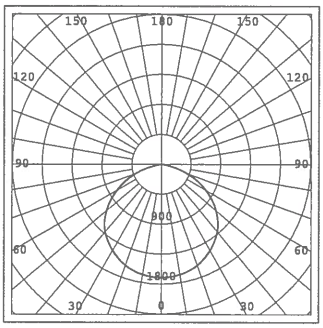

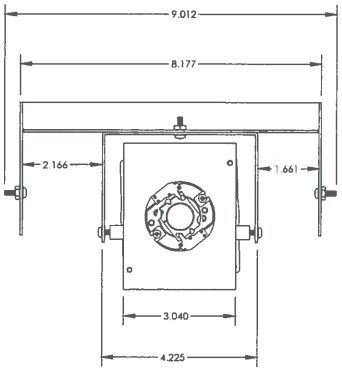

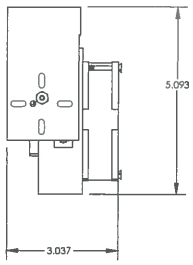

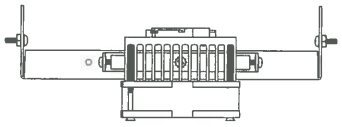

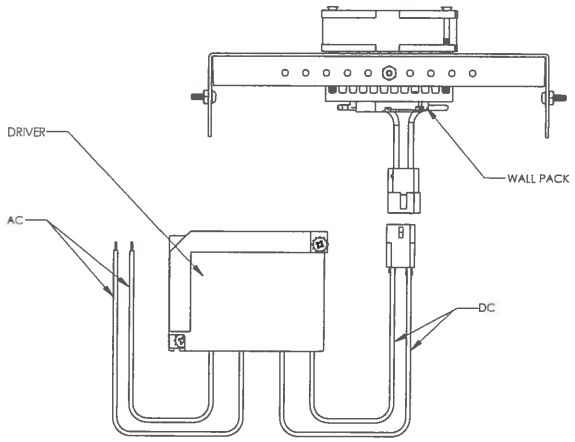

SCHEMATIC

Zonal Lumen Summary per IES publication TM-15-07

FORWARD LIGHT	LUMENS	% OF LUMINAIRES
Forward Low Zone (0 to 30 Deg.)	578.17	14.2%
Forward Mid Zone (30 to 60 Deg.)	1070.83	26.3%
Forward High Zone (60 to 80 Deg.)	256.51	6.3%
Forward Very High Zone (80 to 90 Deg.)	0.00	0.0%
	2035.8	**46.8%**
BACK LIGHT		
Back Light Low Zone (0 to 30 Deg.)	317.04	14.6%
Back Light Mid Zone (30 to 60 Deg.)	638.68	29.1%
Back Light High Zone (60 to 80 Deg.)	374.59	9.2%
Back Light Very High Zone (80 to 90 Deg.)	8.14	0.2%
	2308.8	**53.1%**
UPLIGHT		
Uplight Low Zone (90 to 100 Deg.)	0.00	0.0%
Uplight High Zone (100 to 180 Deg.)	0.00	0.0%

IES"BUG" Rating per IES TM-15-11

BACK LIGHT	LUMENS	SECONDARY SOLID ANGLE RATING
BH (60-80 Deg.)	400.4	B 1
BM (30-60 Deg.)	1265.3	B 1
BL (0-30 Deg.)	635.9	B 1
UPLIGHT		
UH (100-180 Deg.)	0.0	U 0
UL (90-100 Deg.)	0.0	U 0
GLARE LIGHT		
FVH (80-90 Deg.)	1.4	G 0
BVH (80-90 Deg.)	7.2	G 0
FH (60-80 Deg.)	275.6	G 0
BH (60-80 Deg.)	400.4	G 0

IES BUG RATING: B1 U0 G0

© 2014 **Energy Focus, Inc.** 32000 Aurora Road, Suite B Solon, OH 44139 tel **440.715.1300** 800.327.7877 fax 440.715.1301 **www.energyfocusinc.com**
All Rights Reserved. Energy Focus, Inc. reserves the right to changes specifications for product improvement without prior notice.

Elite 7W 12V MR16

The same performance that you have come to expect in TCP PAR lamps, can now be found in our LED MR16s – The perfect replacement for 50 watt halogen.

Limitless options for the following applications:

- Track Lights
- Recessed Downlights
- Display Lights
- Outdoor Fixtures (That Protect from Elements)

Great features and benefits:

- Energy Efficient: 80% more efficient than halogen.
- Replaces 50W Halogen.
- Excellent CBCP and Beam Quality.
- Long life: 25,000 hours (lasts at least 12 times longer than halogen.)
- ROI < 1 year.
- Excellent Color consistency and high color rendering (CRI).
- Smooth, Uniform Dimming.

7W 12V MR16

TCP
325 Campus Dr. | Aurora, Ohio 44202 | P: 800-324-1496 | tcpi.com
©TCP JULY 2014/53172

ENERGY STAR AWARD 2014
PARTNER OF THE YEAR

TCP ELITE Series — LED Dimmable 7W 12V MR16 Lamp

LED Dimmable MR16	25,000 Hours average rated life, 12 Volts

Catalog Number

Notes | Type

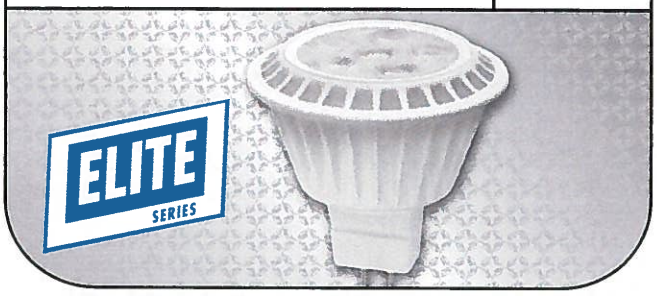

Applications:

Ideal for dimmable MR16 flood and spot applications.

- Track Lights
- Recessed Downlights
- Display Lights
- Outdoor Fixtures that Protect Lamps from the Elements

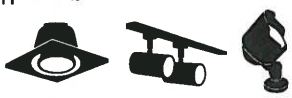

Features	Benefits
High lumen output	Replaces 50W halogen MR16
Up to 85% less energy than halogen alternatives	Instant energy savings
Smooth, uniform dimming	Set the perfect mood & atmosphere
Long life	Minimizes replacement and maintenance costs
Very low heat generation	Perfect for sensistive display lighting such as art galleries.
Excellent Color Consistency and CRI	Enhances colors of focal point while maintaining uniformity throughout lighting installation from lamp to lamp.
Low weight	Track or down light installations are not strained by excess weight.
Shatter resistant	Lower the risk of injury and breakage

Specifications

Input Line Voltage:	12V
Input Power	7W
Input Line Frequency	50/60HZ
Lamp Life (Rated)	25,000 hrs
Minimum Starting Temp	-30°C
Maximum Operating Temp	40°C
CCT	24K, 27K, 30K, 41K
CRI	82
Beam Angles	20 & 40

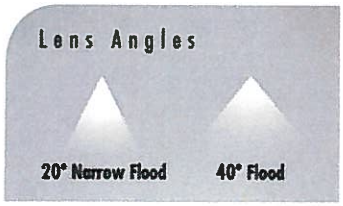

Warranties and Certifications:

c UL us

5 YEAR WARRANTY

Specification Notes:

Item #	Description	Voltage	Wattage	Replacement	Lumens	LPW	CBCP est.	Beam Angle	CCT	CRI	CRI	M.O.L. (inches)	Diameter (inches)	Case Quantity
50W Elite MR16														
LED712VMR16V24KNFL	Dimmable 7W 12V MR16 - 2400K, 20°	12	7	50	450	64.3	2802	20	2400K	82	>0	2	2	12
LED712VMR16V24KFL	Dimmable 7W 12V MR16 - 2400K, 40°	12	7	50	450	64.3	898	40	2400K	82	>0	2	2	12
LED712VMR16V27KNFL	Dimmable 7W 12V MR16 - 2700K, 20°	12	7	50	500	71.4	3796	20	2700K	82	>0	2	2	12
LED712VMR16V27KFL	Dimmable 7W 12V MR16 - 2700K, 40°	12	7	50	500	71.4	1057	40	2700K	82	>0	2	2	12
LED712VMR16V30KNFL	Dimmable 7W 12V MR16 - 3000K, 20°	12	7	50	500	71.4	3796	20	3000K	82	>0	2	2	12
LED712VMR16V30KFL	Dimmable 7W 12V MR16 - 3000K, 40°	12	7	50	500	71.4	1057	40	3000K	82	>0	2	2	12
LED712VMR16V41KNFL	Dimmable 7W 12V MR16 - 4100K, 20°	12	7	50	525	75.0	3796	20	4100K	82	>0	2	2	12
LED712VMR16V41KFL	Dimmable 7W 12V MR16 - 4100K, 40°	12	7	50	525	75.0	1057	40	4100K	82	>0	2	2	12
50W Designer Elite MR16														
LED712VMR16824KNFL	Dimmable 7W 12V MR16 - 2400K, 20°	12	7	50	450	64.3	2802	20	2400K	82	>0	2	2	12
LED712VMR16824KFL	Dimmable 7W 12V MR16 - 2400K, 40°	12	7	50	450	64.3	898	40	2400K	82	>0	2	2	12
LED712VMR16827KNFL	Dimmable 7W 12V MR16 - 2700K, 20°	12	7	50	500	71.4	3296	20	2700K	82	>0	2	2	12
LED712VMR16827KFL	Dimmable 7W 12V MR16 - 2700K, 40°	12	7	50	500	71.4	1057	40	2700K	82	>0	2	2	12
LED712VMR16830KNFL	Dimmable 7W 12V MR16 - 3000K, 20°	12	7	50	500	71.4	3296	20	3000K	82	>0	2	2	12
LED712VMR16830KFL	Dimmable 7W 12V MR16 - 3000K, 40°	12	7	50	500	71.4	1057	40	3000K	82	>0	2	2	12
LED712VMR16841KNFL	Dimmable 7W 12V MR16 - 4100K, 20°	12	7	50	525	75.0	3296	20	4100K	82	>0	2	2	12
LED712VMR16841KFL	Dimmable 7W 12V MR16 - 4100K, 40°	12	7	50	525	75.0	1057	40	4100K	82	>0	2	2	12
50W Designer Elite High CRI MR16														
LED712VMR16924KNFL	Dimmable 7W 12V MR16 - 2400K, 20°, 9050	12	7	50	383	54.6	2381	20	2400K	92	>50	2	2	12
LED712VMR16924KFL	Dimmable 7W 12V MR16 - 2400K, 40°, 9050	12	7	50	383	54.6	764	40	2400K	92	>50	2	2	12
LED712VMR16927KNFL	Dimmable 7W 12V MR16 - 2700K, 20°, 9050	12	7	50	425	60.7	2802	20	2700K	92	>50	2	2	12
LED712VMR16927KFL	Dimmable 7W 12V MR16 - 2700K, 40°, 9050	12	7	50	425	60.7	898	40	2700K	92	>50	2	2	12
LED712VMR16930KNFL	Dimmable 7W 12V MR16 - 3000K, 20°, 9050	12	7	50	425	60.7	2802	20	3000K	92	>50	2	2	12
LED712VMR16930KFL	Dimmable 7W 12V MR16 - 3000K, 40°, 9050	12	7	50	425	60.7	898	40	3000K	92	>50	2	2	12
LED712VMR16941KNFL	Dimmable 7W 12V MR16 - 4100K, 20°, 9050	12	7	50	446	63.8	2802	20	4100K	92	>50	2	2	12
LED712VMR16941KFL	Dimmable 7W 12V MR16 - 4100K, 40°, 9050	12	7	50	446	63.8	898	40	4100K	92	>50	2	2	12
50W Designer Elite High CRI MR16, Black Housing														
LED712VMR16927KNFLB	Dimmable 7W 12V MR16 - 2700K, 20°, 9050 Black	12	7	50	425	60.7	2802	20	2700K	92	>50	2	2	12
LED712VMR16927KFLB	Dimmable 7W 12V MR16 - 2700K, 40°, 9050 Black	12	7	50	425	60.7	898	40	2700K	92	>50	2	2	12

TCP
325 Campus Dr. | Aurora, Ohio 44202 | P: 1-800-324-1496 | tcpi.com

©TCP JULY 2014/53172

ENERGY STAR AWARD 2014
PARTNER OF THE YEAR

sensorswitch

SBGR 10 ODP
SBGR 6 ODP

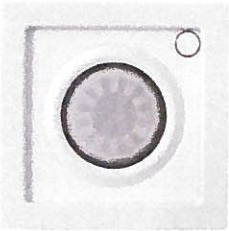

OUTDOOR EMBEDDED MOTION SENSOR
360° COVERAGE • ON/OFF/DIM • PHOTOCELL • IP66 RATED

SPECIFICATIONS

FEATURES
- 100% Digital PIR Detection, Excellent RF Immunity
- Integrated Photocell
- Self-Contained Relay for Switching
- 0-10 VDC Output for Dimming
- Gasketed for use in Wet Location Luminaire
- Compatible w/ 0-10 VDC Dimmable Ballasts and LED Drivers
- Interchangeable Hot & Load Wires, Impossible to Wire in Reverse
- Adjustable Time Delays, Max/Min Dim Levels, and Ramp Rates
- Programming Button Accessible w/o Opening Sensor or Removing Gaskets
- No Field Calibration or Sensitivity Adjustments Required
- Non-Volatile Settings Memory
- Convenient Test Mode
- Green LED Indicator

PHYSICAL SPECS
SIZE (w/ MOUNTING FLANGE):
3.40" H x 3.40" W x 1.40" D
(8.64 cm x 8.64 cm x 3.56 cm)
WEIGHT: 6 oz
MOUNTING: 2.65" (6.73 cm) square opening in fixture (minimum depth 1.50" (3.8 cm))
COLOR: White or Black

ELECTRICAL SPECS
MAXIMUM SWITCHING LOAD:
800 W @ 120 VAC
1000 W @ 208 VAC
1200 W @ 240 VAC
1200 W @ 277 VAC
1500 W @ 347 VAC
2160 W @ 480 VAC
MINIMUM LOAD: None
MOTOR LOAD: 1/4 HP
FREQUENCY: 50/60 Hz
DIMMING LOAD: Sinks < 20mA (0-10 VDC LED Drivers / Ballasts

ENVIRONMENTAL SPECS
OPERATING TEMP:
-40° to 160° F (-40° to 71° C)
IP66 RATED: (when embedded in wet location luminaire)
SILICONE FREE
ROHS COMPLIANT

CSA LISTED
ASSEMBLED in U.S.A.
5 YEAR WARRANTY

OVERVIEW
The **SBGR xx ODP** Series sensors provide both Motion and Daylight based control of a 0-10 VDC dimmable outdoor or wet location luminaire. The **SBGR xx ODP** can both switch and dim its connected lighting. For motion detection, the sensor utilizes 100% Digital Passive Infrared (PIR) technology that is tuned for walking size motion while preventing false tripping from the environment. The unit's integrated photocell enables additional energy savings during daytime periods when there is sufficient daylight.

SEQUENCE OF OPERATION - MOTION
For outdoor applications, where occupant safety is of primary concern, the **SBGR xx ODP** Series sensors are factory set to start dimming the lights once the motion time delay expires. Set to 5 min by default, this time delay is followed by a 5 min ramp down period where the lights slowly drop to the minimum dim level. Utilizing a long ramp down rate eliminates noticeable drops in light level. If motion is detected at any time during the ramp down period or when at the minimum dim level, the sensor will quickly ramp the lights back up to maximum level (default 100%) over a 3 sec (default) period. This ramp up period is intended to quickly return the lighting to full bright without distracting occupants with a sudden jump in the space's light level. The time delays, ramp rates, and max/min dim levels are user adjustable via the accessible push-button. See luminaire specifications for corresponding power level at minimum dim level.

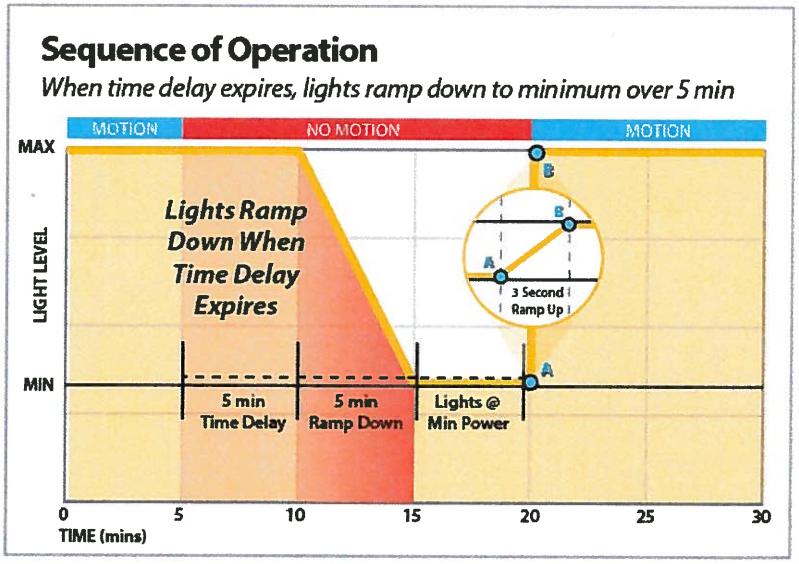

SEQUENCE OF OPERATION - DAYLIGHT
To prevent lights from day-burning, the **SBGR xx ODP** Series sensor will switch lighting completely off during periods of sufficient daylight. Providing on/off photocell control eliminates the need for astronomical or time clocks. Additionally, the sensor's closed loop photocell adjusts its calibration after every cycle to accommodate visual changes to the space in which they are installed (for example different color cars in a parking garage reflecting light differently). The photocell operation can also be set to dim lights to the minimum level instead of turning them off.

ORDERING INFO
SBGR [MOUNTING HEIGHT/LENS] ODP [VOLTAGE] [COLOR] [MINIMUM DIM LEVEL]

OPTIONS

MOUNTING HEIGHT/LENS	VOLTAGE	COLOR	MIN DIM LEVEL	
Low Mount Lens (8-15 ft) = 10	Blank = 120-277 VAC (MVOLT)	WH = White	1V = 1 VDC	4V = 4 VDC
High Mount Lens (15-30 ft) = 6	HVOLT = 347- 480 VAC	BK = Black	2V = 2 VDC	5V = 5 VDC
			3V = 3 VDC	0V = OFF

APPLICATION / COVERAGE

Revised 2.05.14 © 2014 Sensor Switch

PARKING GARAGE / LOW MOUNT APPLICATIONS

In general, the **SBGR 10 ODP** is recommended for 8-15 ft mounting and provides a coverage area radius for walking motion of greater than 2x the mounting height. The **SBGR 10 ODP** is ideal for parking garage and other low mount applications. When mounted 10 ft high, for example embedded in a luminaire in a parking garage, the sensor's coverage for walking motion extends out 30 ft in a 360° pattern. This closely matches the lighting distribution of a typical parking garage luminaire. When embedded in a pole mounted fixture, for example, in a parking lot or along a path, the sensor provides 270° of coverage (90° is blocked by the pole).

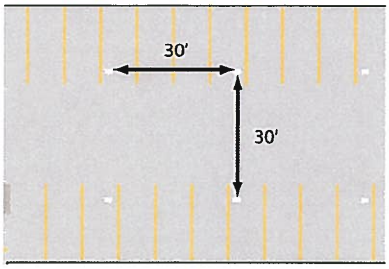

Typical 30'x30' spacing of parking garage luminaires

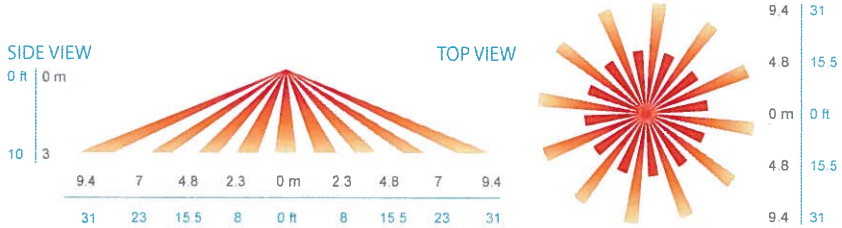

Coverage Pattern of Low Mount Lens Option (SBGR 10 ODP)

SITE & AREA LIGHTING / HIGH MOUNT APPLICATIONS

The **SBGR 6 ODP** is intended for higher applications, between 15-30 ft, and provides a coverage area radius for walking motion of 15-20 ft. When embedded in a fixture mounted to a pole the sensor provides 270° of coverage (90° is blocked by the pole).

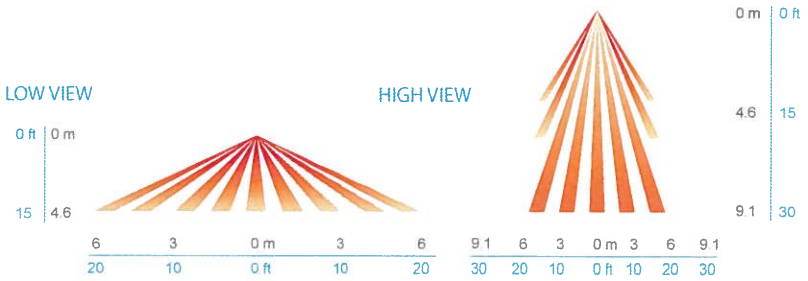

Coverage Pattern of High Mount Lens Option (SBGR 6 ODP)

WIRING (DO NOT WIRE HOT)

WIRING TO SINGLE PHASE POWER (120/277/347 VAC)

- **BLACK*** - 120/277 VAC Input (**RED** wire for 347 VAC - requires HVOLT option)
- **BLACK*** - Switched Line Voltage Output to Luminaire (**RED** wire for 347 VAC - requires HVOLT option)
- **WHITE** - Neutral
- **VIOLET** - Low Voltage Dimming Output (0-10 VDC)
- **GRAY** - Low Voltage Common

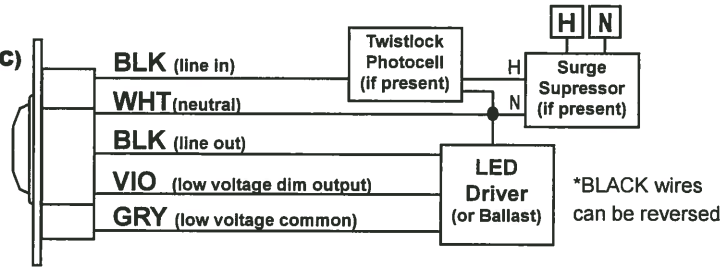

WIRING TO 2-PHASE POWER (208/240/480 VAC)*

- **BLACK*** - 208/240 VAC Phase A Input (**RED** wire for 480 VAC - requires HVOLT option)
- **BLACK*** - Switched Line Voltage Output to Luminaire (**RED** wire for 480 VAC - requires HVOLT option)
- **WHITE** - Phase B of 208/240/480 VAC Input
- **VIOLET** - Low Voltage Dimming Output (0-10 VDC)
- **GRAY** - Low Voltage Common

*Safety Note: only one line phase is being switched

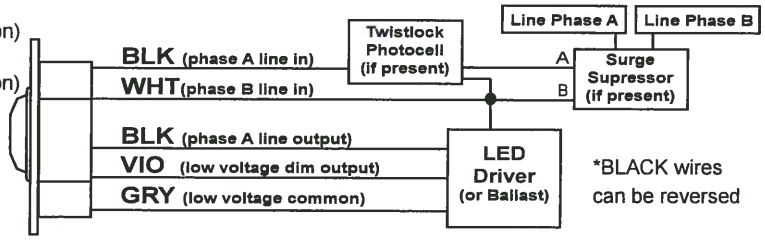

INSTALLATION

- The SBGR Series offers a custom look for recess mounting in lighting fixtures. It mounts inside a 2.65" square opening in a fixture (minimum depth 1.50"). A #6 screw with a max head height of .130 inches is recommended.
- Sensor will detect motions crossing segments more effectively than motions parallel to beams
- If the sensor loses power, the internal relay will latch closed and the dimming output will allow lights to return to full bright.

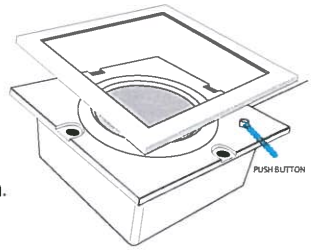

PROGRAMMING

Refer to instruction card IC14.003 for default settings and directions on programming via the push-button.

WARNING

Fire Hazard Caution: Maximum Lamps 1500 Watts, Type 347 VAC.
Attention: Risque d'incendie : Pauissance Maximales Des Lampes 1500 Watts, Type 347 VAC.
Warning: The units are intended to be installed by a qualified person with properly rated branch circuit protectors as per applicable local and national regulations (CEC, NEC).

sensorswitch®

An AcuityBrands Company

WARRANTY: Sensor Switch warrants these products to be free of defects in manufacture and workmanship for a period of 60 months. Sensor Switch, upon prompt notice of such defect, will, at its option, provide a Returned Material Authorization number and repair or replace returned product.
LIMITATIONS AND EXCLUSIONS: This Warranty is in full lieu of all other representation and expressed and implied warranties (including the implied warranties of merchantability and fitness for use) and under no circumstances shall Sensor Switch be liable for any incidental or consequential property damages or losses.

900 Northrop Road, Wallingford, CT 06492 • 1.800.PASSIVE • FX 203.269.9621 • www.sensorswitch.com

EXHIBIT 1 TO APPENDIX B

APPENDIX C

PAYMENT BOND

KNOW ALL PERSONS BY THESE PRESENTS that:

WHEREAS, the City of Beverly Hills, California, hereinafter "City", has awarded to

_____ [Name of Contractor] hereinafter designated as "Principal," a Contract for
_____ within the City;

WHEREAS, said Principal is required under the terms of the Contract, which is incorporated herein, and the California Civil Code, to file a good and sufficient payment bond with the City to secure the claims to which reference is made in Title 3 (commencing with Section 9000) of Part 6 of Division 4 of the Civil Code;

NOW, THEREFORE, we, the undersigned Principal, and _____,
("Surety") a duly admitted surety insurer under the laws of the State of California, as Surety, are held firmly bound unto the City and all contractors, subcontractors, laborers, material suppliers, and other persons employed in the performance of the Contract and referred to in Title 3 (commencing with Section 9000) of Part 6 of Division 4 of the Civil Code in the penal sum of:
_____ Dollars ($_____),
for materials furnished or labor thereon of any kind, or for amounts due under the Unemployment Insurance Act with respect to this work or labor, that the surety will pay the same in an amount not exceeding the amount hereinabove set forth, and also in case suit is brought upon this bond, will pay, in addition to the face amount thereof, costs and reasonable expenses and fees, including reasonable attorney's fees, incurred by the City in successfully enforcing this obligation, to be awarded and fixed by the court, and to be taxed as costs and to be included in the judgment therein rendered.
It is hereby expressly stipulated and agreed that this bond shall inure to the benefit of any and all persons, companies, and corporations entitled to file claims under Title 3 (commencing with Section 9000) of Part 6 of Division 4 of the Civil Code, so as to give a right of action to them or their assigns in any suit brought upon this bond.
Should the condition of this bond be fully performed, then this obligation shall become null and void, otherwise it shall be and remain in full force and effect.

FURTHER the Surety, for value received, hereby stipulates and agrees that no change, extension of time, alteration or addition to the Contract Documents, or of the work to be performed thereunder, shall in any way affect the obligations of this bond, and it does hereby waive notice of any such change, extension of time, alteration, or addition to the terms of the Contract Documents or to the work or specifications thereunder. Surety hereby waives notice of any such change, extension, alteration, or addition.

IN WITNESS WHEREOF, three (3) identical counterparts of this instrument, each of which shall for all purposes be deemed an original hereof, have been duly executed by the Principal and Surety named herein, on the date set forth below, the name of each corporate party being hereto affixed and these presents duly signed by its undersigned representative(s) pursuant to authority of its governing body.

DATE: _____

"PRINCIPAL"	"SURETY"
_____	_____
_____	_____
BY: _____ Its	BY: _____ Its
BY: _____ Its	BY: _____ Its
{ SEAL }	{ SEAL }

NOTE: THIS BOND MUST BE EXECUTED IN TRIPLICATE AND DATED. ALL SIGNATURES MUST BE NOTARIZED, AND EVIDENCE OF THE AUTHORITY OF ANY PERSON SIGNING AS ATTORNEY-IN-FACT MUST BE ATTACHED.

APPENDIX D

PERFORMANCE BOND

KNOW ALL PERSONS BY THESE PRESENTS that:

WHEREAS, the City of Beverly Hills, California, hereinafter "City", has awarded to _____ [Name of Contractor] hereinafter designated as "principal," a Contract for _____ within the City;

Whereas, principal is required under the terms of the Contract, which is incorporated herein, to furnish a bond for the faithful performance of the Contract;

Now, therefore, we, the principal and _____, as surety, are held and firmly bound unto the City hereinafter called ("Surety"), in the penal sum of _____ dollars ($_____) lawful money of the United States, for the payment of which sum well and truly to be made, we bind ourselves, our heirs, successors, executors and administrators, jointly and severally, firmly by these presents.

The condition of this obligation is such that if the above bounded principal, his or its heirs, executors, administrators, successors or assigns, shall in all things stand to and abide by, and well and truly keep and perform the covenants, conditions and provisions in the Contract and any alteration thereof made as therein provided, on his or their part, to be kept and performed at the time and in the manner therein specified, and in all respects according to their true intent and meaning, and shall indemnify and save harmless the City and its officers, agents and employees, as therein stipulated, then this obligation shall become null and void; otherwise it shall be and remain in full force and effect.

As a part of the obligation secured hereby and in addition to the face amount specified therefor, there shall be included costs and reasonable expenses and fees, including reasonable attorneys' fees, incurred by the City in successfully enforcing such obligation, all to be taxed as costs and included in any judgment rendered.

The surety hereby stipulates and agrees that no change, extension of time, alteration or addition to the terms of the Contract or to the work to be performed thereunder or the specifications accompanying the same shall in anywise affect its obligations on this bond, and it does hereby waive notice of any such change, extension of time, alteration or addition to the terms of the Contract or to the work or to the specifications.

IN WITNESS WHEREOF, three (3) identical counterparts of this instrument, each of which shall for all purposes be deemed an original hereof, have been duly executed by the Principal and Surety named herein, on the date set forth below, the name of each corporate party being hereto affixed and these presents duly signed by its undersigned representative(s) pursuant to authority of its governing body.

DATE: _____

"PRINCIPAL"	"SURETY"
_____	_____
_____	_____
BY: _____	BY: _____
Its	Its
BY: _____	BY: _____
Its	Its
{ SEAL }	{ SEAL }

NOTE: THIS BOND MUST BE EXECUTED IN TRIPLICATE AND DATED. ALL SIGNATURES MUST BE NOTARIZED, AND EVIDENCE OF THE AUTHORITY OF ANY PERSON SIGNING AS ATTORNEY-IN-FACT MUST BE ATTACHED.

APPENDIX E

CERTIFICATE OF INSURANCE
(PUBLIC LIABILITY)

This is to certify that the following endorsement is part of the policy(ies) described below:

Named Insured (Contractor)

N. Companies Affording Coverage

A.

Address

B.

C.

Policy Number	Company A,B,C	Coverage	Expiration Date	B.I.	Limits P.D.	Aggregate
		[ ] Automobile Liability				
		[ ] General Liability				
		[ ] Products/Completed Operations				
		[ ] Blanket Contractual				
		[ ] Contractor's Protective				
		[ ] Personal injury				
		[ ] Other				
		[ ] Excess Liability				
		[ ] Workers' Compensation				

O. It is hereby understood and agreed that the City of Beverly Hills, its City Council and each member thereof and every officer and employee of the City shall be named as a joint and several assureds with respect to claims arising out of the following project: _____

It is further agreed that the following indemnity agreement between the City of Beverly Hills and the named insured is covered under the policy: Contractor agrees to indemnify, hold harmless and defend City, its City Council and each member thereof and every officer and employee of City from any and all liability or financial loss resulting from any suits, claims, losses or actions brought against and from all cost and expenses of litigation brought against City, its City Council and each member thereof and any officer or employee of City which results directly or indirectly from the wrongful or negligent actions of contractor's officers, employees, agents, or others employed by contractor while engaged by contractor in the (performance of this agreement) construction of this project.

It is further agreed that the inclusion of more than one assured shall not operate to increase the limit of the company's liability and that insurer waives any right on contribution with insurance which may be available to City of Beverly Hills.

In the event of cancellation or material change in the above coverage, the company will give 30 days' written notice of cancellation or material change to the certificate holder.

Except to certify that the policy(ies) described above have the above endorsement attached, this certificate or verification of insurance is not an insurance policy and does not amend, extend or alter the coverage afforded by the policies listed herein. Notwithstanding any requirement, term, condition of any contract or other document with respect to which this certification or verification of insurance may be issued or may pertain, the insurance afforded by the policies described herein is subject to all the terms, exclusions and conditions of such policies.

DATE _____ BY _____
AUTHORIZED INSURANCE REPRESENTATIVE

AGENCY _____ TITLE _____

_____ ADDRESS _____
_____ _____

APPENDIX F

CERTIFICATE OF INSURANCE
(Workers' Compensation)

WHEREAS, the City of Beverly Hills has requires certain insurance to be provided by:

_____

_____

NOW, THEREFORE, the undersigned insurance company does hereby certify that it has issued the policy or policies described below to the following named insureds and that the same are in force at this time.

1. This certificate is issued to: City of Beverly Hills, City Hall, 455 North Rexford Drive, Beverly Hills, California.

2. The insureds under such policy or policies are:

_____

_____

3. Workers' Compensation Policy or Policies in a form approved by the Insurance Commissioner of California covering all operations of the named insureds, as follows:

POLICY NUMBER	EFFECTIVE DATE	EXPIRATION DATE
_____	_____	_____
_____	_____	_____
_____	_____	_____

3. Said policy or policies shall not be canceled, nor shall there by any reduction in coverage or limits of liability, unless and until thirty days written notice thereof has been served upon the City Clerk of the City of Beverly Hills.

_____

By_____
Its Authorized Representative

Approved as to form:

_____ 20 ____

By:_____
LAURENCE S. WIENER, City Attorney

APPENDIX G

STATEMENT ACKNOWLEDGING OBLIGATION TO COMPLY WITH CALIFORNIA LABOR LAW

I, the undersigned Contractor, certify that I am aware of and will fully comply with the following provisions of California law:

Contractor acknowledges that the Work as defined in this Contract between Contractor and the City, to which this document is attached and incorporated by reference, is a "public work" as defined in Division 2, Part 7, Chapter 1 (commencing with Section 1720) of the California Labor Code ("Chapter 1"), and that this Contract is subject to (a) Chapter 1, including without limitation Labor Code Section 1771 and (b) the rules and regulations established by the Director of Industrial Relations ("DIR") implementing such statutes. Contractor shall perform the entire Work as a public work. Contractor shall comply with and be bound by all the terms, rules and regulations described in parts (a) and (b) as though set forth in full herein. California law requires the inclusion of specific Labor Code provisions in certain contracts. The inclusion of such specific provisions below, whether or not required by California law, does not alter the meaning or scope of Section 1 above.

Pursuant to Labor Code Section 1773.2, copies of the prevailing rate of per diem wages for each craft, classification, or type of worker needed to perform the Contract are on file at the office of the City Engineer at City Hall and will be made available to any interested party on request. Contractor acknowledges receipt of a copy of the DIR determination of such prevailing rate of per diem wages, and Contractor shall post such rates at each job site covered by this Contract.

Contractor agrees to comply with the provisions of California Labor Code Section 1773.8 which require the payment of travel and subsistence payments to each worker needed to execute the Work, to the extent required by law.

Contractor agrees to comply with the provisions of California Labor Code Section 1774 and 1775 concerning the payment of prevailing wages to workers and the penalties for failure to do so. Contractor shall, as a penalty to the City, forfeit two hundred dollars ($200) for each calendar day or portion thereof, for each worker paid less than the prevailing rates, as determined by the Director of Industrial Relations, for the work or craft in which the worker is employed for any public work done under the Contract by Contractor or any subcontractor.

Contractor agrees to comply with the provisions of California Labor Code Section 1776, which require Contractor and each subcontractor to (1) keep accurate payroll records, (2) certify and make those payroll records available for inspection as provided by Section 1776, and (3) inform the City of the location of the records. Contractor is responsible for compliance with Section 1776, by itself and all of its subcontractors.

Contractor agrees to comply with the provisions of California Labor Code Section 1777.5, 1777.6 and 1777.7 and California Administrative Code title 8, Section 200 *et seq*. concerning the employment of apprentices on public works projects. Contractor shall be responsible for compliance with these aforementioned Sections for all apprenticeable occupations. Prior to commencing work under this Contract, Contractor shall provide City with a copy of the information submitted to any applicable apprenticeship program. Within sixty (60) days after concluding work pursuant to this Contract, Contractor and each of its subcontractors shall submit to the City a verified statement of the journeyman and apprentice hours performed under this Contract.

Contractor acknowledges that eight (8) hours labor constitutes a legal day's work. Contractor agrees to comply with and be bound by Labor Code Section 1810. Contractor agrees to comply with the provisions of California Labor Code Section 1813 concerning penalties for workers who work excess hours. Contractor shall, as a penalty to the Agency, forfeit twenty-five dollars ($25) for each worker employed in the execution of the Contract by Contractor or by any subcontractor for each calendar day during which such worker was required or permitted to work more than 8 hours in any one calendar day or 40 hours in any one calendar week in violation of the provisions of Division 2, Part 7, Chapter 1, Article 3 of the California Labor Code. Pursuant to Labor Code Section 1815, work performed by employees of Contractor in excess of 8 hours per day, and 40 hours during any one week shall be permitted upon public work upon compensation for all hours worked in excess of 8 hours per day at not less than 11/2 times the basic rate of pay.

California Labor Code Sections 1860 and 3700, provide that every contractor will be required to secure the payment of compensation to its employees. In accordance with the provisions of California Labor Code Section 1861, Contractor hereby certifies as follows:

> "I am aware of the provisions of Section 3700 of the Labor Code which require every employer to be insured against liability for worker's compensation or to undertake self-insurance in accordance with the provisions of that code, and I will comply with such provisions before commencing the performance of the work of this contract."

For every subcontractor who will perform labor on or otherwise participate in the Work, Contractor shall be responsible for such subcontractor's compliance with Chapter 1 and Labor Code Sections 1860 and 3700, and Contractor shall include in the written contract between it and each subcontractor a copy of those statutory provisions and a requirement that each subcontractor shall comply with those statutory provisions. Contractor shall be required to take all actions necessary to enforce such contractual provisions and ensure subcontractor's compliance, including without limitation, conducting a periodic review of the certified payroll records of the subcontractor and upon becoming aware of the failure of the subcontractor to pay his or her workers the specified prevailing rate of wages. Contractor shall diligently take corrective action to halt or rectify any failure.

To the maximum extent permitted by law, Contractor shall indemnify, hold harmless and defend (at Contractor's expense with counsel reasonably acceptable to the City) the City, its officials, officers, employees, agents and independent contractors serving in the role of City officials, and volunteers from and against any demand or claim for damages, compensation, fines, penalties or other amounts arising out of or incidental to any acts or omissions listed above by any person or entity (including Contractor, its subcontractors, and each of their officials, officers, employees and agents) in connection with any work undertaken or in connection with the Contract, including without limitation the payment of all consequential damages, attorneys' fees, and other related costs and expenses. All duties of Contractor under this Section shall survive termination of the Contract.

Date: _____ Signature: _____

Date: _____ Signature: _____

APPENDIX H: DESIGNATION OF SUBCONTRACTORS
[Public Contract Code 4104]

List all Subcontractors doing work in an amount in excess of 0.5% of the Contractor's total Bid or, in the case of Bids or offers for the construction of Streets or highways (including bridges), in excess of 0.5% of the Contractor's total Bid or $10,000, whichever is greater. If all Subcontractors do not fit on this page, attach another page listing all information for all other Subcontractors.

Name under which Subcontractor is Licensed	California Contractor's License Number(s) & Class(es)	Address & Phone Number	Type of Work (e.g., Electrical)

APPENDIX I: NONCOLLUSION DECLARATION

The undersigned declares:

I am the _____ of _____, the party making the foregoing Bid.

The Bid is not made in the interest of, or on behalf of, any undisclosed Person, partnership, company, association, organization, or corporation. The Bid is genuine and not collusive or sham. The Bidder has not directly or indirectly induced or solicited any other Bidder to put in a false or sham Bid. The Bidder has not directly or indirectly colluded, conspired, connived, or agreed with any Bidder or anyone else to put in a sham Bid, or to refrain from bidding. The Bidder has not in any manner, directly or indirectly, sought by agreement, communication, or conference with anyone to fix the Bid price of the Bidder or any other Bidder, or to fix any overhead, profit, or cost element of the Bid price, or of that of any other Bidder. All statements contained in the Bid are true. The Bidder has not, directly or indirectly, submitted his or her Bid price or any breakdown thereof, or the contents thereof, or divulged information or data relative thereto, to any corporation, partnership, company, association, organization, Bid depository, or to any member or agent thereof, to effectuate a collusive or sham Bid, and has not paid, and will not pay, any Person or entity for such purpose.

Any person executing this declaration on behalf of a Bidder that is a corporation, partnership, joint venture, limited liability company, limited liability partnership, or any other entity, hereby represents that he or she has full power to execute, and does execute, this declaration on behalf of the Bidder.

I declare under penalty of perjury under the laws of the State of California that the foregoing is true and correct and that this declaration is executed on _____ [date], at _____ [city], _____ [state]."

Signature _____ Signature _____

Printed Name:_____ Printed Name:_____

Date: _____ Date: _____

This form must be notarized.