ATTACHMENT 4

CATEGORICAL EXEMPTION REPORT

City of Beverly Hills

250-260 North Canon Drive

CEQA Categorical Exemption Report

September 2016

rincon

Environmental Scientists Planners Engineers

250-260 North Canon Drive

CEQA
Categorical Exemption Report

Prepared by:

City of Beverly Hills
Planning Division, Department of Community Development
455 North Rexford Drive
Beverly Hills, California 90210
Contact: Emily Gable, Assistant Planner

Prepared with the assistance of:

Rincon Consultants, Inc.
180 North Ashwood Avenue
Ventura, California 93003

September 2016

This page intentionally left blank.

City of Beverly Hills
250-260 North Canon Drive

CEQA Categorical Exemption Report

Table of Contents

Page

Introduction 1
Project Description 1
Existing Site Conditions 11
Analysis 11
Summary 34
References 35

List of Tables

Table 1 Project Characteristics 10
Table 2 Consistency with Beverly Hills General Plan Policies 13
Table 3 Level of Service Criteria-Signalized Intersections 16
Table 4 Level of Service Criteria-Unsignalized Intersections 16
Table 5 Existing Level of Service 17
Table 6 Project Trip Generation 17
Table 7 Existing (2016) Traffic Conditions with and without Project 18
Table 8 Future (2018) Traffic Conditions with and without Project 18
Table 9 Parking Requirements 19
Table 10 On-Site Noise Measurement Results 22
Table 11 Typical Noise Levels at Construction Sites 23
Table 12 Vibration Source Levels for Construction Equipment 24
Table 13 Vehicle Trip Increase by Roadway 25
Table 14 Estimated Operational Emissions 27
Table 15 Estimated Construction Emissions 28
Table 16 Estimated GHG Construction Emissions 31
Table 17 Combined Annual Emissions of Greenhouse Gases 32

List of Figures

Figure 1 Project Location 3
Figure 2 Site Plan 4
Figure 3.1 Parking Levels B3 and B2 Plan 5
Figure 3.2 Parking Level B1 Plan 6
Figure 3.3 Ground Floor Plan 7
Figure 3.4 Second Floor Plan 8
Figure 3.5 Third Floor Plan 9

Appendices

Appendix A Traffic Impact Study
Appendix B Noise Measurement Data
Appendix C Air Quality and Greenhouse Gas Modeling

CATEGORICAL EXEMPTION REPORT

This report serves as the technical documentation of an environmental analysis performed by Rincon Consultants, Inc., for the proposed Zone Text Amendment and 250-260 N. Canon Drive restaurant project in the City of Beverly Hills. The intent of the analysis is to document whether the project is eligible for Class 5 and Class 32 Categorical Exemptions (CEs). The report provides an introduction, project description, and evaluation of the project's consistency with the requirements for Class 5 and Class 32 exemptions. The report concludes that the project is exempt from further CEQA review pursuant to Class 5 and Class 32 exemptions.

1. INTRODUCTION

The California Environmental Quality Act (CEQA) states that a Class 5 CE may be applied to minor alterations in land use limitations in areas with an average slope of less than 20%, which do not result in any changes in land use or density.

CEQA also states that a Class 32 CE is allowed when:

> *(a) The project is consistent with the applicable general plan designation and all applicable general plan policies as well as with applicable zoning designation and regulations.*
> *(b) The proposed development occurs within city limits on a project site of no more than five acres substantially surrounded by urban uses.*
> *(c) The project site has no value as habitat for endangered, rare or threatened species.*
> *(d) Approval of the project would not result in any significant effects relating to traffic, noise, air quality, or water quality.*
> *(e) The site can be adequately served by all required utilities and public services.*

Additionally, State CEQA Guidelines Section 15300.2 states that a categorical exemption "shall not be used for a project which may cause a substantial adverse change in the significance of a historical resource."

Rincon Consultants, Inc. evaluated the project's consistency with the above requirements, including its potential impacts in the areas of biological resources, traffic, noise, air quality, water quality, and historic resources to confirm the project's eligibility for the Class 5 and Class 32 exemptions.

2. PROJECT DESCRIPTION

The project site is located in the central "business triangle" portion of Beverly Hills, on N. Canon Drive between Wilshire Boulevard and Santa Monica Boulevard. Figure 1 shows the location of the project site. The site is comprised of two adjacent, tied lots. The northern portion of the site is currently developed with a three-story commercial building and six surface parking spaces. The southern portion of the site is currently developed with a twenty-two space surface parking lot. The existing commercial building has a floor area of 15,683 square feet (sf) and its footprint covers slightly less than half the project site.

The project would involve demolition of the surface parking lot on the southern portion of the site, and construction of a three-story commercial building to be utilized as restaurant space. The new building would have a floor area of 12,040 sf and three levels of subterranean parking with an area of 19,496 sf. The existing three-story commercial building would remain generally as is, unaffected by the project except to accommodate accessible paths to parking and modify windows that would be covered by the new building.

Figure 1 shows the location of the project site, Figure 2 shows the proposed site plan, and figures 3.1-3.5 show the proposed floor plans. Table 1 summarizes the characteristics of the proposed building.

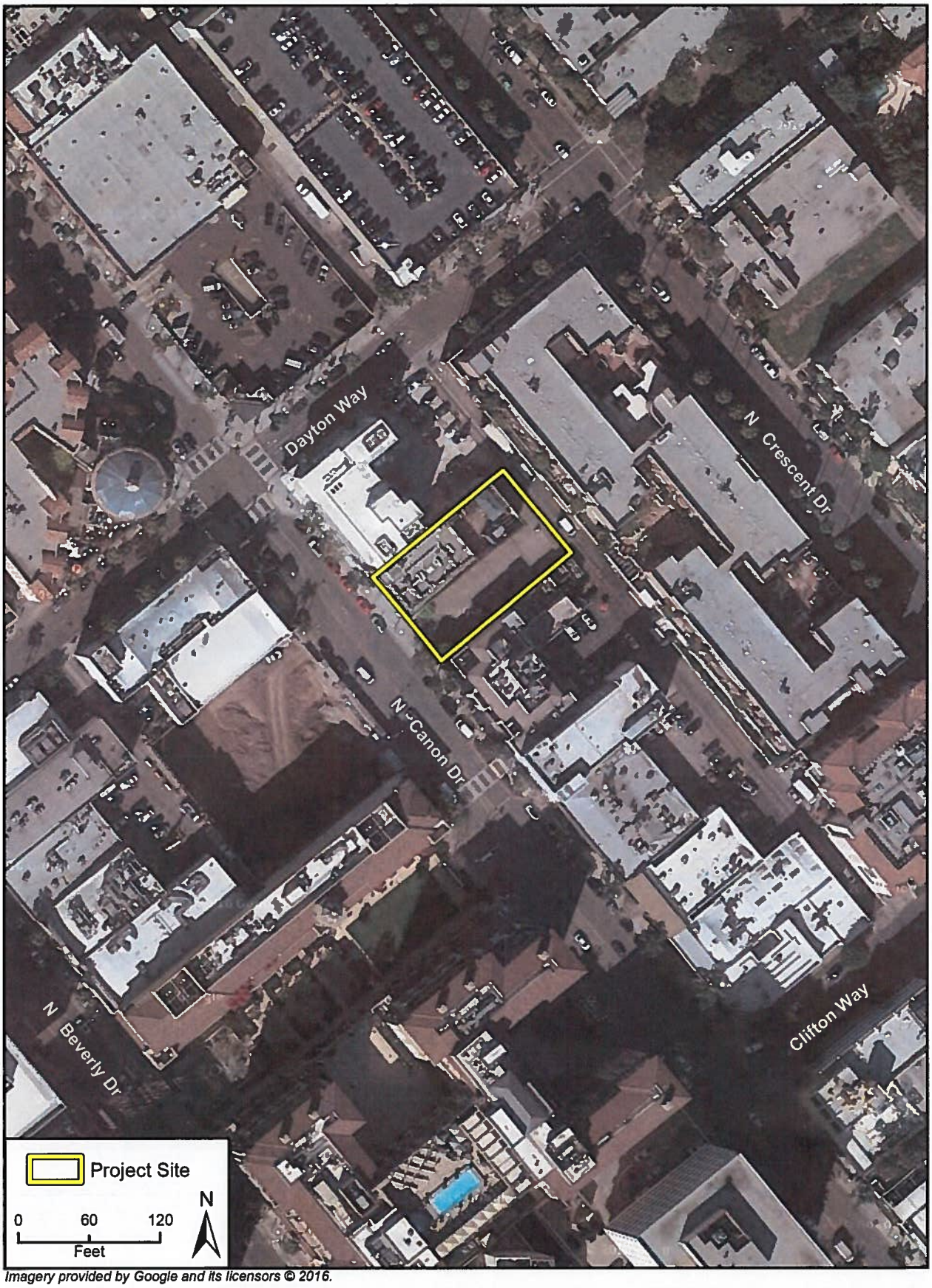

Imagery provided by Google and its licensors © 2016.

Project Location

Figure 1

City of Beverly Hills

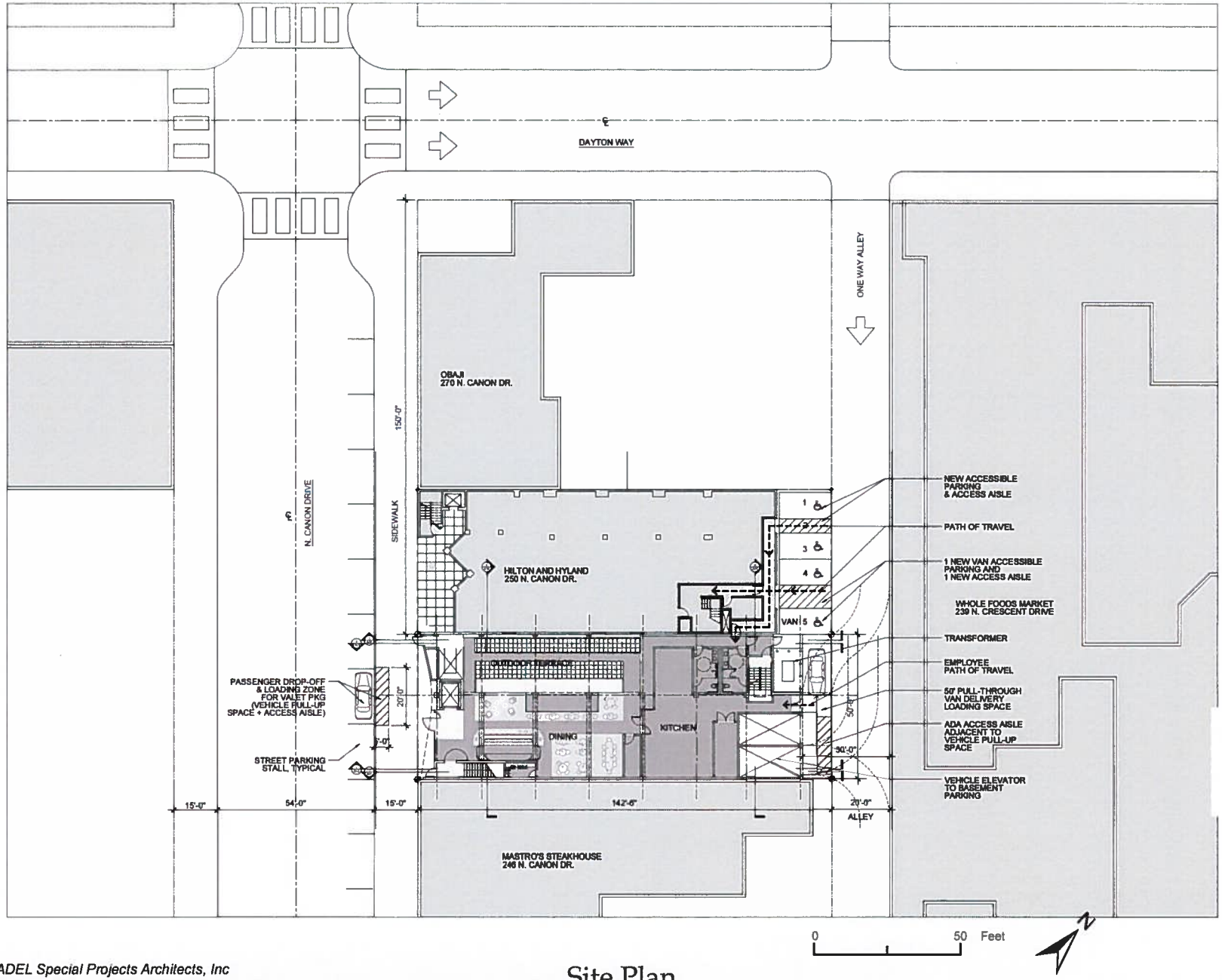

Source: NADEL Special Projects Architects, Inc
September 9, 2016

Site Plan

Figure 2

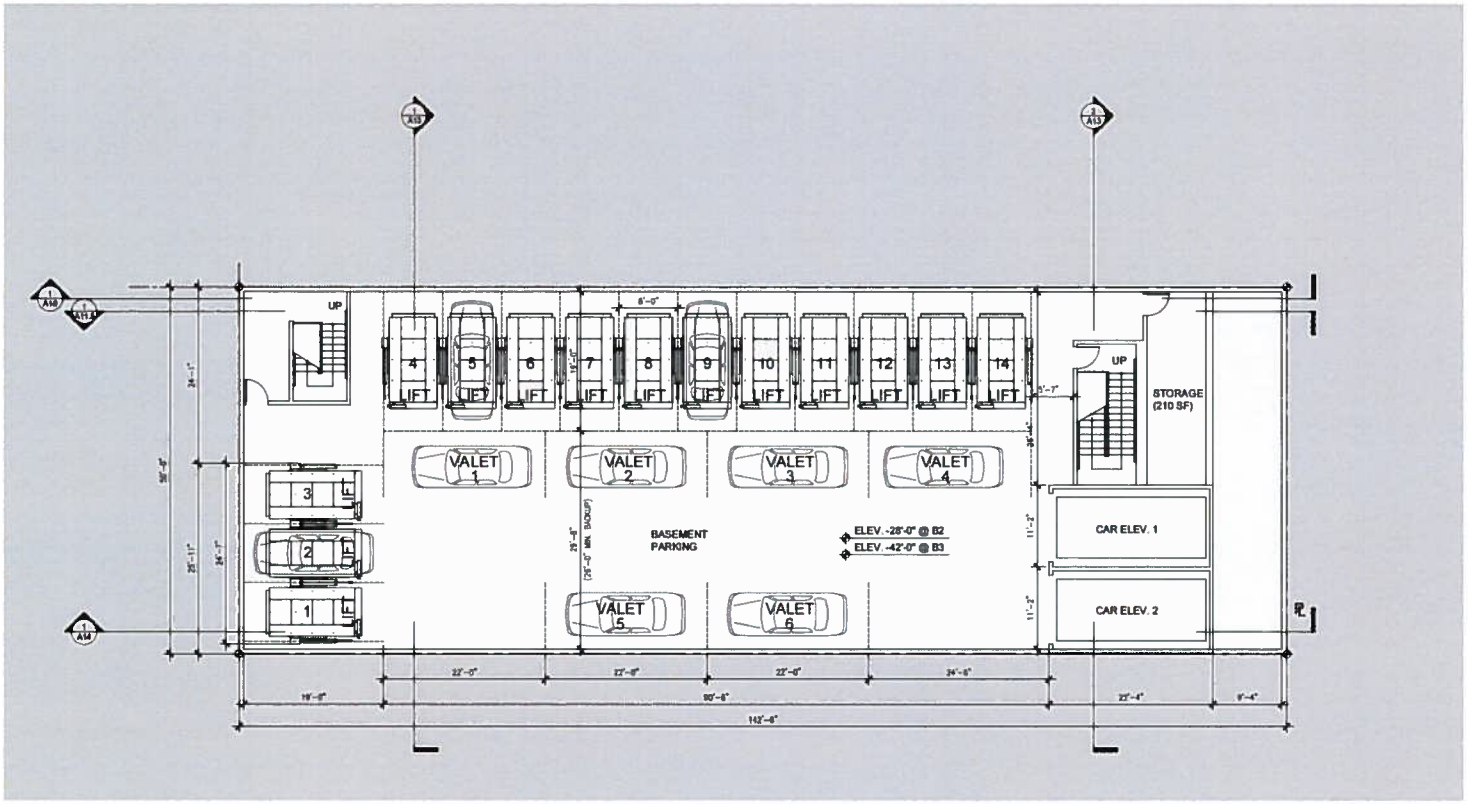

AMERICAN CUSTOM LIFTS ACC-6 SPECIFICATION

MAX CAPACITY.....6000 LB
CENTERLINE WIDTH.....8'-0"
INSIDE PLATFORM WIDTH.....78"
INSIDE COLUMN WIDTH.....66"
OVERALL LENGTH.....13'
PLATFORM LENGTH.....12'-0"
MAXIMUM WHEELBASE.....129"
INSIDE HEIGHT CLEARANCE.....72"
COLUMN HEIGHT.....10'-1"

MECHANICAL LOCKS EACH COLUMN
SINGLE POINT MANUAL LOCK RELEASE
POSITIVE LOCKING REAR STOP

208/230V 1 PH INDIVIDUAL PWR UNIT

PARKING AT THIS LEVEL:

28 ON LIFTS
8 VALET D.P.
34 TOTAL PARKING SPACES ON EACH FLOOR

0 25 Feet

Source: NADEL Special Projects Architects, Inc
September 9, 2016

Parking Levels B3 and B2 Plan

Figure 3.1

City of Beverly Hills

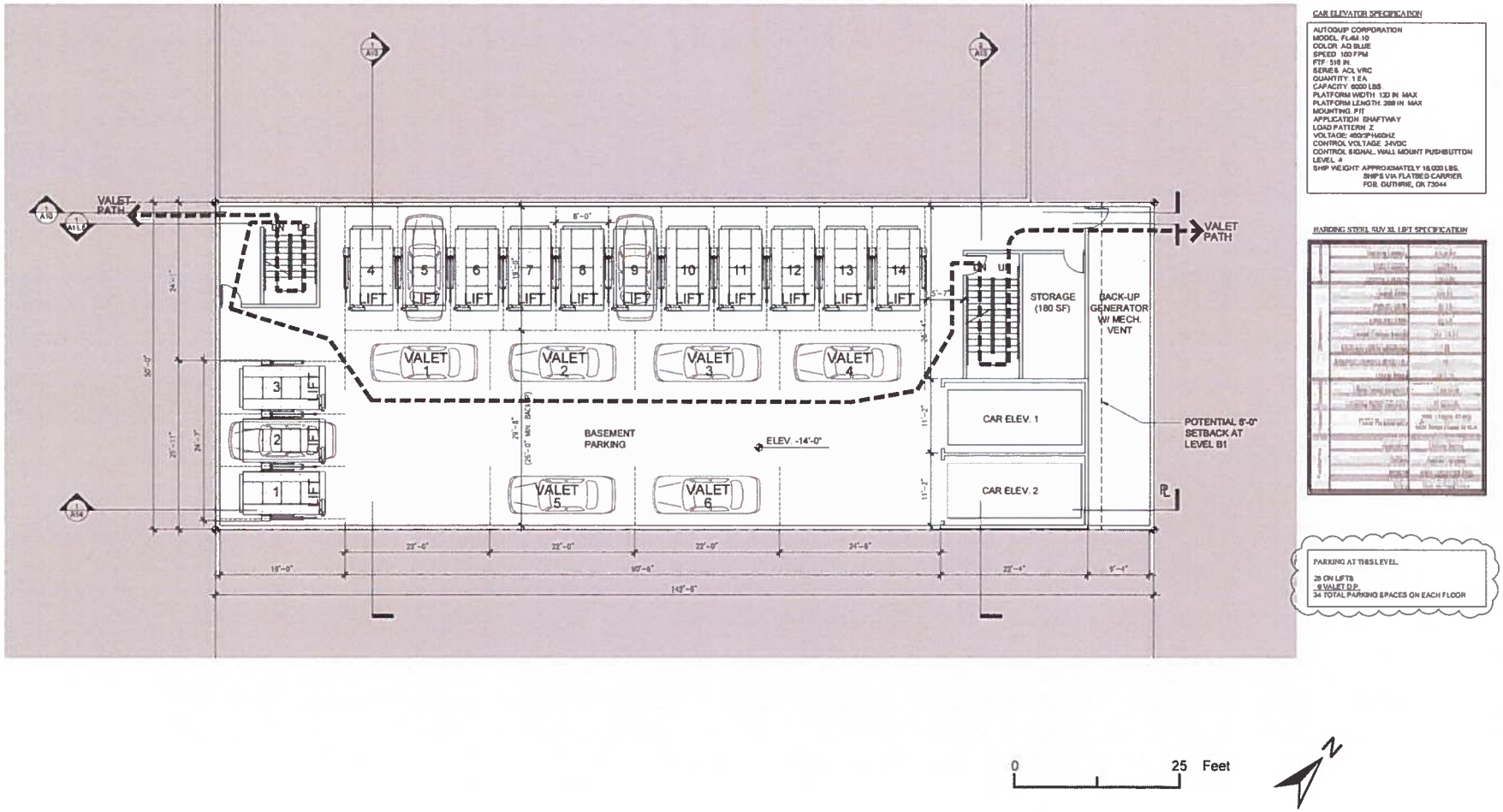

Source: NADEL Special Projects Architects, Inc
September 9, 2016

Parking Level B1 Plan

Figure 3.2

City of Beverly Hills

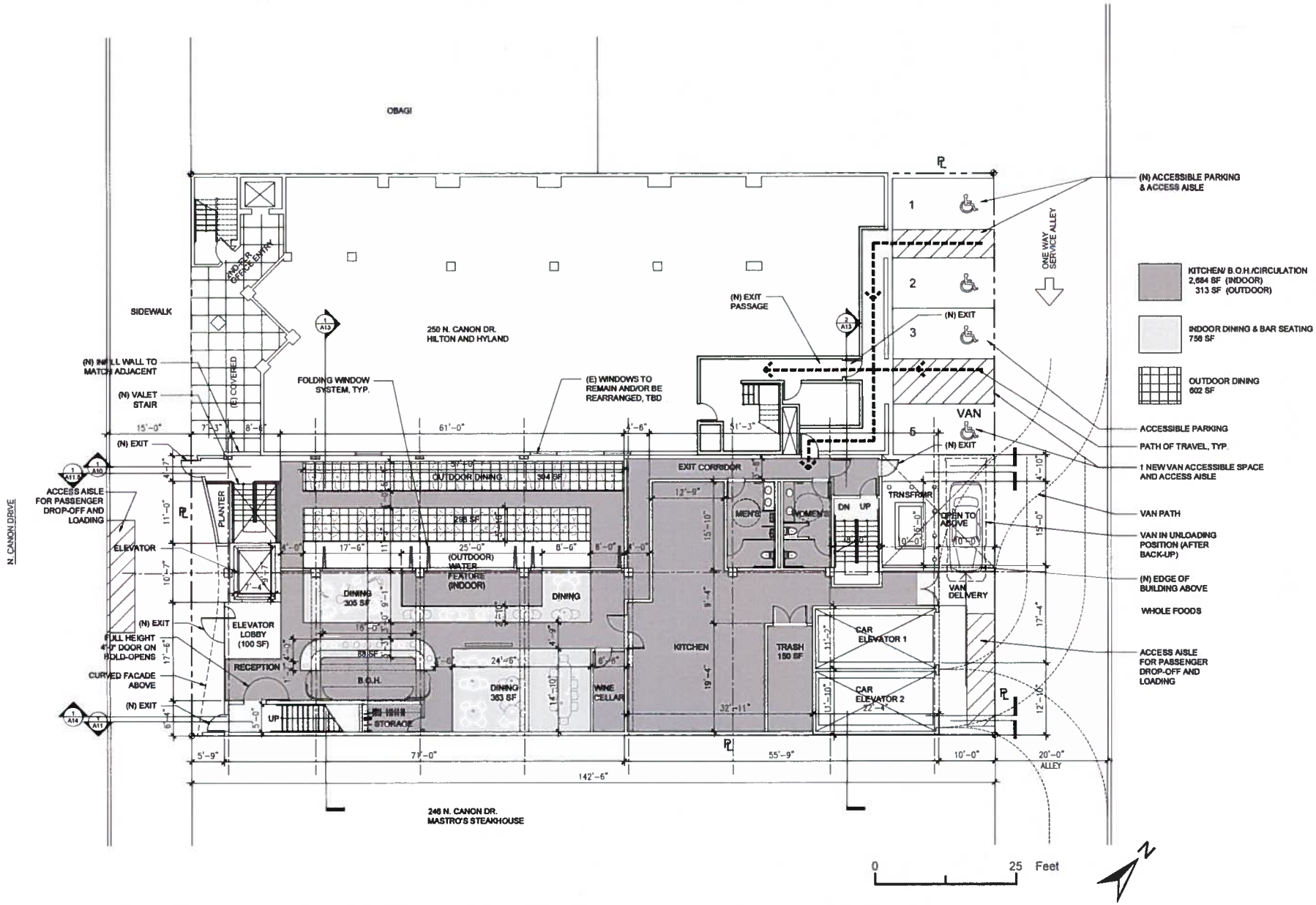

Source: NADEL Special Projects Architects, Inc
September 9, 2016

Ground Floor Plan

Figure 3.3

City of Beverly Hills

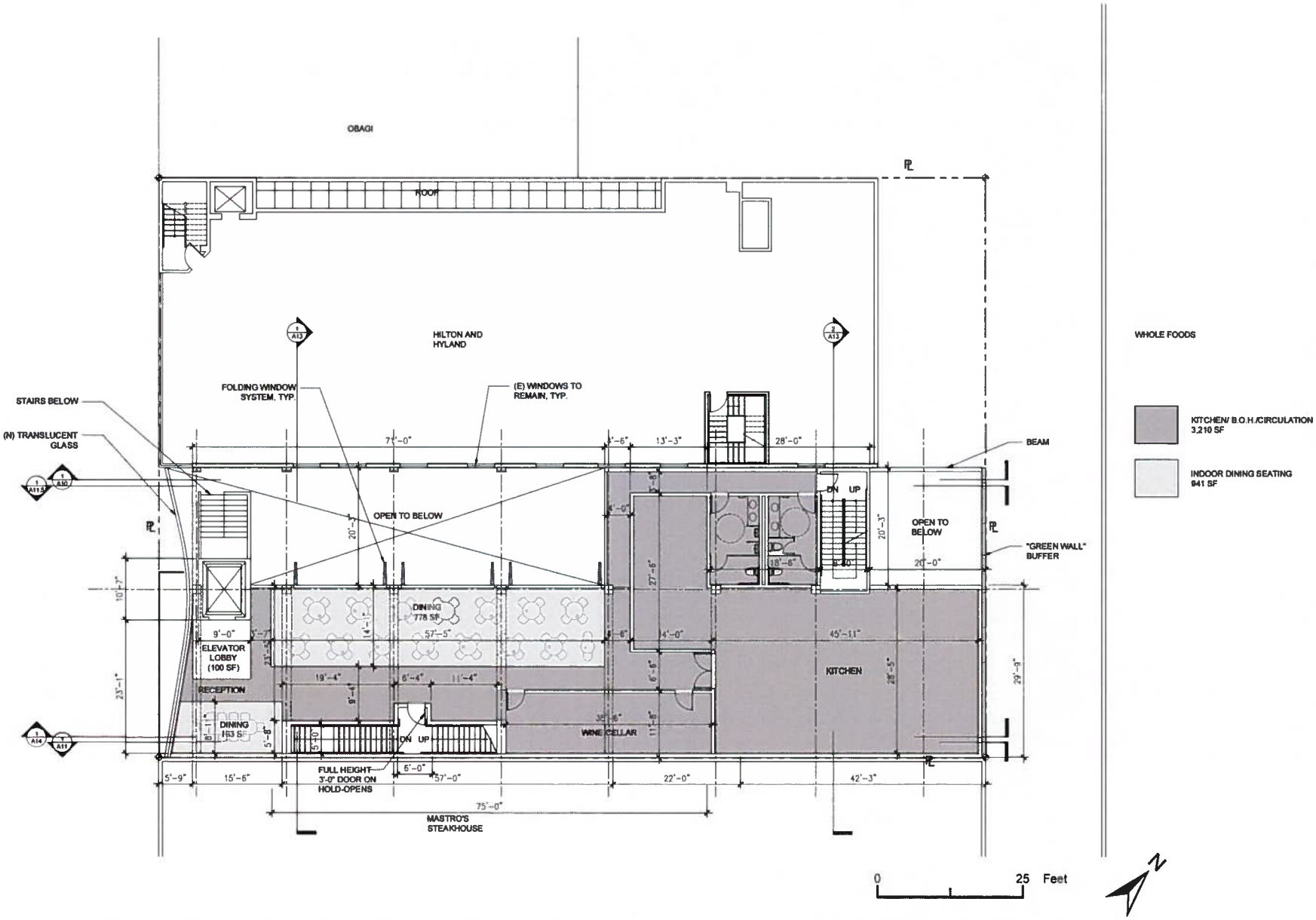

Source: NADEL Special Projects Architects, Inc
September 9, 2016

Second Floor Plan

Figure 3.4

City of Beverly Hills

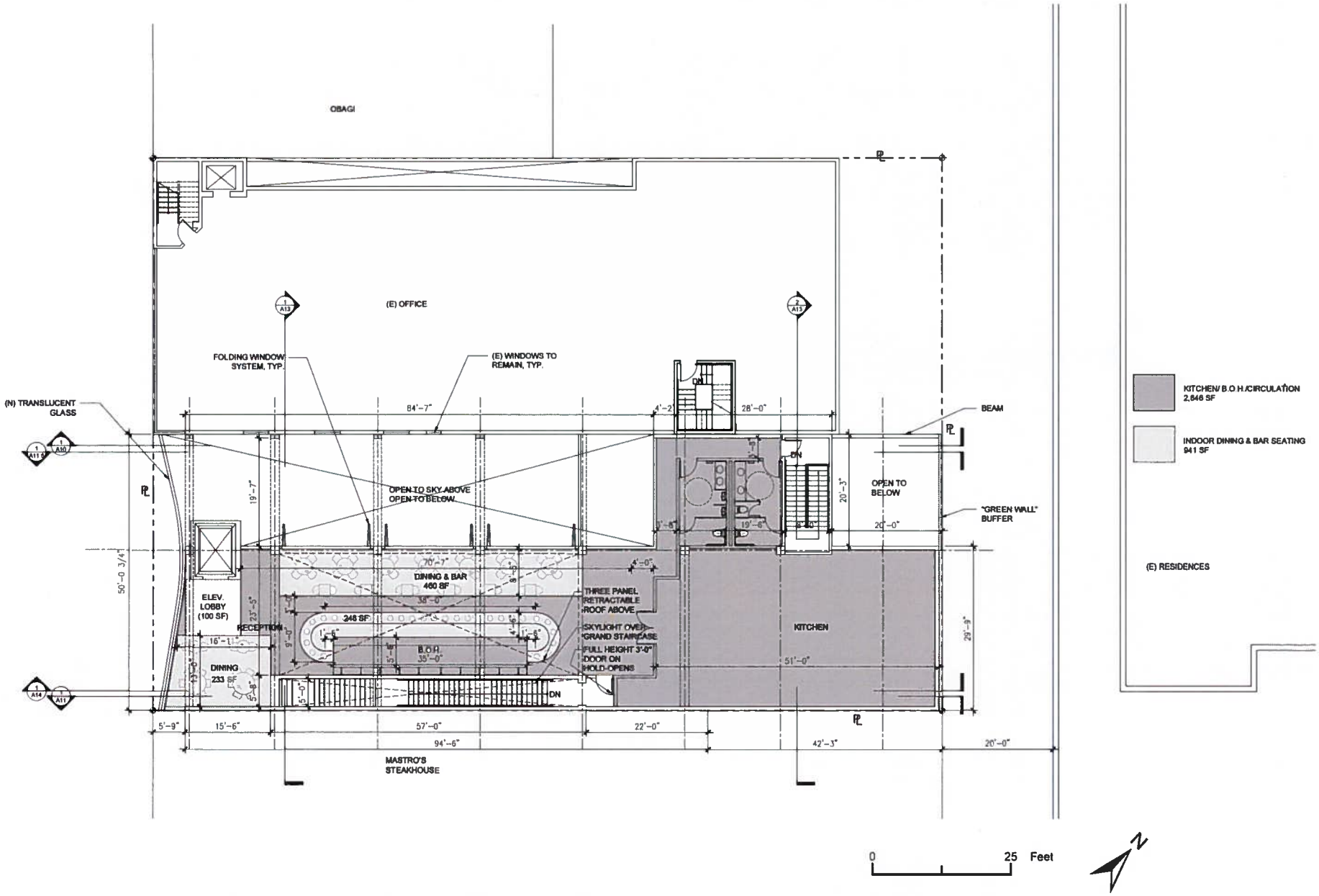

Source: NADEL Special Projects Architects, Inc
September 9, 2016

Third Floor Plan

Figure 3.5

City of Beverly Hills

Table 1
Project Characteristics

Address	250-260 N. Canon Drive
Assessor's Parcel Numbers (APNs)	4343-006-002
Lot Area	14,275 sf
Proposed Floor Area (on the lot area currently used for surface parking)	Ground Floor: 3,753 sf Second Floor: 4,343 sf Third Floor: 3,944 sf Total: 12,040 sf1
Existing Floor Area	15,683 sf
Total Floor Area with Project	27,723 sf
Floor Area Ratio	1.94
Land Use	Restaurant in the new building area; continuation of existing office/ retail in existing building
Height	45 feet[2] 3 stories above grade plus parapet, with 3 underground levels of parking below
Parking	102 below-grade spaces in levels B1 to B3, 19,496 sf 4 at-grade spaces off the alley behind the existing building on the north portion of the project site

[1] The total floor area is calculated pursuant to Beverly Hills Municipal Code §10-3-100 and does not include parking areas, elevator shafts, stair shafts, and rooms housing building operating equipment or machinery rooms.
[2] The listed height does not include the parapet, which would add 3'9" to the building's height.
sf = square feet

The proposed building would have a floor area of 12,040 sf, not including the parking areas, elevator and stair shafts, and rooms housing operating equipment or machinery. The floor area would include 2,638 sf of indoor dining and bar areas on the ground, 2nd, and 3rd floors; 602 sf of outdoor dining area at the northwest corner of the ground level; 8,740 sf of indoor circulation, kitchen, employee, office, and restroom areas on the ground, 2nd, and 3rd floors; and 313 sf of outdoor circulation space on the ground floor. The project would provide a total of 3,240 sf of indoor and outdoor dining and bar area and 9,053 sf of indoor and outdoor circulation and other non-dining areas.

The building would have a height of 45 feet at the rooftop, not including the parapet, elevator overrun, mechanical equipment, and equipment enclosure. The building parapet would be a maximum of 48'9". The mechanical penthouse and associated screening would have a maximum height of 60 feet. Additionally, the roof of the building would feature a three panel retractable roof, with a maximum opening of 1,265 sf over the dining and bar area on the third level.

Parking would be provided through surface parking and three levels of subterranean parking, providing a total of 106 spaces (102 below grade and four at grade off the alley behind the existing building). The four surface parking spaces and a loading area would be located off the alley, behind the existing building. Each of the three levels of subterranean parking would feature 14 car lifts and six aisle parking spaces. The car lifts would allow for two cars to be stacked vertically. With the lifts, each level would be able to accommodate 28 cars on lifts and an additional six in the aisle spaces, totaling 34 available parking spaces on each level. The subterranean parking area would be accessed via two automobile elevators off of the rear alley at the southwest end of the project site. Vehicle access into the garage would be valet only. Valet service is anticipated to run from 8:00 AM to close of restaurant on weekdays and 10:00 AM to close of restaurant on weekends. Employees and visitors of the existing office building on the north portion of the project site would drop-off and pick up their vehicles in the alley and patrons to the restaurant would drop-off and pick-up their vehicles on N. Canon Drive.

The project includes a request for the following Zone Text Amendment:

- To allow an alternative parking facility that utilizes automobile elevators and/or stacked mechanical lift parking with valet operation, to provide required parking, subject to approval of a Conditional Use Permit;

The project would also require approval of a Conditional Use Permit and entitlements for joint use of parking between the primarily daytime use office building and the primarily nighttime use restaurant space, extended operating hours from 11:00 AM to 1:30 AM seven days a week, and open air dining.

3. EXISTING SITE CONDITIONS

The project site is a flat, rectangular area of 14,275 sf (0.33 acres) located on the northeast side of N. Canon Drive, between Clifton Way and Dayton Way in the City of Beverly Hills. An alley runs behind the property to the northeast. The site is currently developed with a 15,575 sf, three-story commercial building on the north side and a surface parking lot on the south side. Vehicular access is provided from N. Canon Drive and the rear alley. The surrounding area is developed with multi-story buildings. A four-story building is located immediately north of the project site and a three-story building is located immediately south of the project site. Immediately across N. Canon Drive from the project site, a three-story commercial building is under construction. Behind the project site and across the alley is a four-story mixed use building with a ground-floor grocery store and parking and three upper residential floors.

4. ANALYSIS

CLASS 5 CATEGORICAL EXEMPTION

The proposed Zone Text Amendment would allow an "alternative parking facility"—involving automobile elevators and/or mechanical lift parking—to be used to provide required parking for commercial uses in commercial zones through approval of a Conditional Use Permit. Such facilities could currently be used to provide non-required parking.

Both the city as a whole and the commercially-zoned areas of the city (primarily south of North Santa Monica Boulevard) have an average slope of less than 20%.

Therefore the project, and zone text amendment in particular, involves minor alterations in land use limitations in areas with an average slope of less than 20%, which do not result in any changes in land use or density, and is eligible for a Class 5 CE.

CLASS 32 CATEGORICAL EXEMPTION

Criterion (a) *The project is consistent with the applicable general plan designation and all applicable general plan policies as well as with applicable zoning designation and regulations.*

Permitted Uses. According to the City of Beverly Hills General Plan Land Use Map, the project site is designated for Low Density General Commercial use. The project site is zoned C-3 Commercial. Pursuant to the City of Beverly Hills Municipal Code (BHMC) Section 10-3-1601, the C-3 zone permits commercial uses including, but not limited to, cafes, theaters, exercise clubs, dance academies, studios, offices, parking garages, and wholesale or retail shops. The proposed restaurant use is allowed on the project site, pursuant to the C-3 zoning.

Floor Area Ratio. The Beverly Hills General Plan permits a floor area ratio (FAR) of 2.0 in Low Density General Commercial areas. The project would have an acceptable FAR of 1.94 (27,723 sf / 14,275 sf).

Height. BHMC Section 10-3-2726 limits buildings in the C-3 zone to three stories or 45 feet, whichever is less. The proposed new building on the southern portion of the project site would have a height of three stories and 45 feet, when measured as defined by BHMC Section 10-3-100. Rooftop features including a maximum 3'9" parapet and maximum 15-foot elevator overrun, mechanical penthouse, and associated screening would exceed the 45-foot height. However, according to BHMC Section 10-3-100, rooftop parapets are allowed to exceed the height limit of a building by up to 45 inches (or 3'9") and rooftop penthouses used exclusively for mechanical equipment are allowed to exceed the height limit of the building by up to 15 feet. The 45 foot building, 3'9" parapet, and 15 foot mechanical penthouse would be in compliance with the height requirements.

Parking Facilities and Operations. Based on the floor area of the proposed restaurant and a request for Planning Commission approval of joint use of parking facilities between primarily daytime and primarily nighttime uses, 106 standard and accessible parking spaces would be required pursuant to BHMC Section 10-3-2730. The project includes a request for a Zone Text Amendment to allow automobile elevators, mechanical lift parking (vertical stacking), and drive aisle parking to meet parking requirements. This Zone Text Amendment would create a new Conditional Use Permit for "alternative parking facilities." With approval of the Zone Text Amendment and Conditional Use Permit including joint use of parking, the project would be consistent with the city's standards for parking access, technology, and minimum parking stall and drive aisle dimensions.

Extended Hours. Because the project site is located in a transition area between commercial and residential uses, the project would require an Extended Hours Permit pursuant to BHMC Section 10-3-1958 to allow extended operating hours for the restaurant. In order to be granted extended hours, project operation would be required to meet the conditions specified in BHMC Section 10-3-1958C, stating that operation shall not substantially disrupt the peace and quiet of the adjacent neighborhood as a result of the following:

- *The accumulation of garbage, litter, or other waste, both on and off of the subject site;*
- *Noise created by the extended hours operation or by employees or visitors entering or exiting the extended hours operation;*
- *Light and glare;*
- *Odors and noxious fumes;*
- *Pedestrian queuing;*
- *Crime or peril to personal safety and security;*
- *Use of residential streets for parking which is likely to cause activity associated with the subject extended hours operation to intrude substantially into a residential area;*
- *Effects on traffic volumes and congestion on local residential streets; and*
- *Cumulative impacts relating to the existing concentration of extended hours operations in the vicinity of the proposed extended hours operation.*

The Extended Hours Permit would require a public hearing and decision by the planning commission by resolution. In order to ensure compliance with BHMC Section 10-3-1958, the planning commission may impose conditions of approval on the project.

General Plan Consistency. The General Plan has several land-use policies that are relevant to the project, including the following specifically applicable policies related to community character and quality and economic sustainability. Table 2 presents an evaluation of the project's consistency with applicable Beverly Hills General Plan policies.

Table 2
Consistency with Beverly Hills General Plan Policies

LU 2.1 City Places: Neighborhoods, Districts, and Corridors. *Maintain and enhance the character, distribution, built form, scale, and aesthetic qualities of the City's distinctive residential neighborhoods, business districts, corridors, and open spaces.*	Consistent: Surrounding development consists of three-story commercial and mixed-use buildings. The proposed three-story commercial building would be similar in scale to surrounding development and would be consistent with the character and quality of the area. The project would include an infill wall to match the existing commercial building on the north portion of the project site (currently occupied by Hilton & Hyland), creating a cohesive transition between the buildings. Architecturally, the building would feature translucent glass on a curved façade. This would create a modern look, consistent with the existing buildings and building under construction across the street. The building would undergo architectural review to ensure the façade is compatible with the surrounding development. The building would be designed within the height, setback, and FAR envelope allowed by the zoning code. The new building may obstruct limited

Table 2
Consistency with Beverly Hills General Plan Policies

	portions of existing views from the third floor of the existing neighboring building to the south of the project site at 246 N. Canon Drive. However, views are not protected in commercial areas of the City and the obstruction would be minor in nature.
LU 2.4 Architectural and Site Design. *Require that new construction and renovation of existing buildings and properties exhibit a high level of excellence in site planning, architectural design, building materials, use of sustainable design and construction practices, landscaping, and amenities that contribute to the City's distinctive image and complement existing development.* ***LU 11.2 Site Planning and Architectural Design.*** *Require that commercial and office properties and buildings are planned and designed to exhibit a high level of site and architectural design quality and excellence.*	Consistent: The project design would be required to undergo architectural review to ensure that the design is complements the existing development and exhibits quality site and architectural design. The building would feature a curved glass façade. The translucent glass and curved exterior would contribute to an open, inviting street scape.
LU 2.8 Pedestrian Active Streets. *Require that buildings in business districts be oriented to, and actively engage the street through design features such as build-to lines, articulated and modulated façades, ground floor transparency such as large windows, and the limitation of parking entries directly on the street. Parking ingress and egress should be accessed from alleys where feasible.*	Consistent: The new building would be oriented towards N. Canon Drive, providing pedestrian access from the existing sidewalk and actively engaging the street. Vehicle access to the subterranean parking garage would be provided from the rear alley.
LU 9.1 Uses for Diverse Customers. *Accommodate retail, office, entertainment, dining, hotel, and visitor serving uses that support the needs of local residents, attract customers from the region, and provide a quality experience for national and international tourists.*	Consistent: The proposed project would accommodate dining uses that support the needs of local residents and attract customers from the region.
LU 12.2 Building, Parking Structure, and Site Design. *Require that buildings, parking structures, and properties in commercial and office districts be designed to assure compatibility with abutting residential neighborhoods, incorporating such elements as setbacks, transitional building heights and bulk, architectural treatment of all elevations, landscape buffers, enclosure of storage facilities, air conditioning, and other utilities, walls and fences, and non-glare external lighting.*	Consistent: The proposed building, parking structure, and site design would be compatible with abutting residential neighborhoods. The building height of three stories above grade would be compatible with the adjacent three-story buildings. With approval of a Zone Text Amendment and associated Conditional Use Permit and Minor Accommodation, the project would be permitted to forego the setback and wall requirement for commercial uses adjacent to residential use.
LU 12.3 Alleys Between Commercial and Residential Uses. *Encourage that alleys be attractively designed as a transition between retail and office districts and residential neighborhoods, using features such as quality paving materials, landscaping, low voltage lighting and high-quality maintenance to assure that such alleys are attractive, and kept free of trash and debris.*	Consistent: The project site has a rear alley separating commercial and mixed use development. The length of the alley between Dayton Way and Clifton Way is developed with commercial use on the ground level and is used primarily for commercial use and vehicular access. No ground-level outdoor patios or uses are present along the alley. The project would not alter the nature of the alley.

As shown in Table 2, the project would be generally consistent with applicable General Plan policies. With approval of the requested Zone Text Amendment as well as the requested Conditional Use Permit, Open Air Dining Permit, and Extended Hours Permit, the project would be consistent with the applicable zoning designation and regulations and General Plan designation and policies.

Criterion (b) *The proposed development occurs within city limits on a project site of no more than five acres substantially surrounded by urban uses.*

The project site is located on a 0.33-acre parcel within a developed urban neighborhood. As described in Section 3, Existing Site Conditions, it is immediately surrounded by urban uses on all sides.

Criterion (c) *The project site has no value as habitat for endangered, rare, or threatened species.*

The project site is entirely developed with a paved surface parking lot and a commercial building and is located within a highly developed urban area that lacks habitat that would be suitable for sensitive animal or plant species. A small amount of vegetation is present on the project site, including small hedges, two trees, and vines growing up the exterior wall of the existing office building on the northern portion of the site. This does not provide habitat for sensitive species due to its small size and highly urban context.

Criterion (d) *Approval of the project would not result in any significant effects relating to traffic, noise, air quality, or water quality.*

The following discussion provides an analysis of the project's potential effects with respect to traffic, noise, air quality, and water quality.

A. TRAFFIC

The following analysis of potential traffic impacts is based on the Traffic Impact Study for the project prepared by Crain & Associates in September 2016. Crain & Associates was retained by the project applicant to prepare the study, which was then peer reviewed by City planning staff and the City's Senior Traffic Engineer. The Traffic Impact Study is included as Appendix A. The Traffic Impact Study provides an analysis of impacts based on 3,240 sf of dining area and an estimated patron capacity of 216.

Study Intersections. Four intersections in the project vicinity were analyzed for traffic impacts. These intersections are: N. Canon Drive/Dayton Way; N. Canon Drive/Clifton Way; Crescent Drive/Dayton Way; and Crescent Drive/Clifton Way.

Existing Traffic. Existing traffic at area intersections was determined through vehicular turning movement traffic counts at four study intersections. Due to the operational characteristics of the project, the weekday midday (11:30 AM – 2:00 PM) and PM (4:30 PM – 8:00 PM) peak periods were used for analysis. Manual counts were conducted during each peak period, peak-hour volumes for each study intersection were determined on the basis of the

combined four highest consecutive 15-minute counts for all vehicular movements entering the intersection.

Existing Intersection Operating Conditions. The existing weekday midday and PM peak-hour traffic volumes were used to determine the existing intersection operating conditions. The Intersection Capacity Utilization (ICU) method was used for the signalized intersections at N. Canon Drive/Dayton Way and Crescent Drive/Dayton Way. The Highway Capacity Manual (HCM) method was used for the STOP-sign controlled intersections at N. Canon Drive/Clifton Way and Crescent Drive/Clifton Way. In accordance with the City of Beverly Hills traffic study guidance, each intersection is assigned a Level of Service (LOS) based on volume-to-capacity ratio (V/C) for signalized intersections and overall/control delay for unsignalized intersections. The LOS criteria are shown in Tables 3 and 4.

Table 3
Level of Service Criteria-Signalized Intersections

LOS	Description	V/C
A	Excellent. No vehicle waits longer than one red light.	0.000-0.600
B	Very Good. An occasional approach phase is fully utilized; many drivers begin to feel somewhat restricted within groups of vehicles.	0.601-0.700
C	Good. Occasionally, drivers may have to wail through more than one red light; backups may develop behind turning vehicles.	0.701-0.800
D	Fair. Delays may be substantial during portions of the rush hour, but enough lower volume periods occur to permit clearing of developing lines, preventing excessive backups.	0.801-0.900
E	Poor. Represents the most vehicles that intersection approaches can accommodate; may be long lines of waiting vehicles through several signal cycles.	0.901-1.000
F	Failure. Backups from nearby intersections or on cross streets may restrict or prevent movement of vehicles out of the intersection approaches. Tremendous delays with continuously increasing queue lengths.	>1.00

See Traffic Study, Appendix A

Table 4
Level of Service Criteria-Unsignalized Intersections

LOS	Overall/Control Delay (seconds/vehicle)
A	0-10
B	>10-15
C	>15-25
D	>25-35
E	>35-50
F	>50

See Traffic Study, Appendix A

The existing LOS for midday and PM peak hours are summarized in Table 5.

Table 5
Existing Level of Service

Intersection	Peak Hour	V/C or Delay	LOS
N. Canon Drive/Dayton Way	Midday	0.639	B
	PM	0.773	C
Crescent Drive/Dayton Way	Midday	0.391	A
	PM	0.616	B
N. Canon Drive/Clifton Way	Midday	13.0	B
	PM	11.4	B
Crescent Drive/Clifton Way	Midday	12.2	B
	PM	14.1	B

See Traffic Study, Appendix A

As shown in Table 5, currently all intersections operate at LOS C or better.

Trip Generation. Trip rates for existing and proposed land uses were based on Institute of Traffic Engineers (ITE) traffic generation factors from the 9th Edition of the *Traffic Generation Manual* (ITE, 2012). The trip rate for "Quality Restaurant" was applied to the project. Because the existing office building on the northern portion of the project site generates the trips for the existing parking lot and the project will not eliminate those trips, only trips for the proposed restaurant use were calculated.

As shown in Table 6, the project is expected to generate a net total of 618 daily trips, including 35 trips during the midday peak hour and 56 trips during the PM peak hour.

Table 6
Project Trip Generation

Land Use	Size	Unit	Daily Trips	Midday Peak Hour	PM Peak Hour
Quality Restaurant	216	seats	618	35	56

Source: Traffic Study, Appendix A

Intersection Impacts. Impacts were modeled for existing traffic volumes plus project and future (2018) traffic volumes plus project. According the City of Beverly Hills, impacts to intersections are considered significant if:

- The addition of Project traffic increases the V/C ratio 0.03 or greater at signalized intersections operating at LOS D
- The addition of Project traffic increases the V/C ratio by 0.02 or greater at signalized intersections operating at LOS E or F
- The addition of Project traffic increases the total delay by 4.0 seconds or greater at unsignalized intersections operating at LOS D
- The addition of Project traffic increases the total delay by 3.0 seconds or greater at unsignalized intersections operating at LOS E or F

Table 7
Existing (2016) Traffic Conditions with and without Project

Intersection	Time Period	Existing (2016)		With Project		ICU/Delay Increase	Significant Impact?
		ICU/ Delay	LOS	ICU/ Delay	LOS		
N. Canon Drive/Dayton Way	Midday	0.639	B	0.654	B	0.015	No
	PM	0.773	C	0.798	C	0.025	No
Crescent Drive/Dayton Way	Midday	0.391	A	0.392	A	0.001	No
	PM	0.616	B	0.616	B	0.000	No
N. Canon Drive/Clifton Way	Midday	13.0	B	13.6	B	0.6	No
	PM	11.4	B	12.0	B	0.6	No
Crescent Drive/Clifton Way	Midday	12.2	B	12.3	B	0.1	No
	PM	14.1	B	14.4	B	0.3	No

Source: Traffic Study, Appendix A

Table 8
Future (2018) Traffic Conditions with and without Project

Intersection	Time Period	Future (2018) w/out project		With Project		ICU/Delay Increase	Significant Impact?
		ICU/ Delay	LOS	ICU/ Delay	LOS		
N. Canon Drive/Dayton Way	Midday	0.649	B	0.664	B	0.015	No
	PM	0.792	C	0.817	D	0.025	No
Crescent Drive/Dayton Way	Midday	0.397	A	0.397	A	0.000	No
	PM	0.626	B	0.627	B	0.001	No
N. Canon Drive/Clifton Way	Midday	13.7	B	14.3	B	0.6	No
	PM	12.2	B	12.9	B	0.7	No
Crescent Drive/Clifton Way	Midday	12.4	B	12.6	B	0.2	No
	PM	14.4	B	14.8	B	0.4	No

Source: Traffic Study, Appendix A

As shown in Tables 7 and 8, traffic generated by the project would not increase the ICU or delay at any intersection by a significant amount. Only the intersection at N. Canon Drive/Dayton Way would worsen to LOS D, and the ICU increase resulting from the project would be just 0.025 during both existing and future year conditions, which is less than the allowed ICU increase of 0.03. Therefore, the project would not significantly impact traffic at any of the studied intersections.

Parking Supply and Demand. The project would provide 102 parking spaces in three levels of subterranean parking and four surface parking spaces. The parking requirements for restaurants and their ancillary facilities, such as the project, per BHMC 10-3-2730 are summarized below:

- For the existing office building, the existing parking supply of 28 spaces must be maintained. A covenant dated December 12, 1956 requires that the southern portion of the project site (Lot 4, Block 12, Tract Beverly) continue to be available as automobile parking space for the building on the northern portion of the project site (Lot 3, Block 12, Tract Beverly) for the life of that building. However, the Planning Commission may permit up to 50 percent of the parking facilities of a use considered to primarily a daytime use (such as the office building) may be used to satisfy the parking requirements for a use considered to be primarily a nighttime use (such as the proposed restaurant). The Planning Commission is considering granting a joint use of 25% of the office building's parking spaces.
- For eating and bar facilities, 1 space per 45 sf of dining and bar floor area for the first 9,000 sf and 1 space per 65 sf of dining and bar floor area in excess of 9,000 sf must be provided. However, 25 percent of the spaces required to be provided for commercial uses not otherwise specified in BHMC 10-3-2730 may be applied toward the dining and bar floor area parking requirement.
- For commercial uses not otherwise specified in BHMC 10-3-2730, 1 space per 350 sf of floor area must be provided.

Based on these requirements, the required parking for the project is 106 spaces, as outlined in Table 9.

Table 9
Parking Requirements

Use	Rate	Parking Required
Existing commercial office	Existing	28
3,240 sf of Dining and Bar Area	1 space / 45 sf	72
9,053 sf Additional Space	1 space / 350 sf	26
Dining Area Deduction	25% of (28+26) spaces	(13)
Daytime/Nighttime Joint Use Deduction	25% of 28 spaces	(7)
	Total Parking Required	106
	Total Parking Proposed	106

Per BHMC 10-3-2730

As shown in Table 9, with approval of the Planning Commission the proposed project would meet the parking requirements set forth by the BHMC. Bicycle parking would also be provided for project employees on the first level of the subterranean garage.

In addition to the parking provided in the three-level subterranean garage, the project would involve the lease of a portion of the nearby Zein Obagi parking lot (270 N. Canon Drive) on the southwest corner of Dayton Way and the one-way southbound alley, creating an additional 13 parking spaces after 5:30 PM on weekdays and all day on weekends.

If necessary for special events, the project would also be able to rent up to a total of 38 spaces in the Zein Obagi parking lot or additional spaces at either the Crescent Drive North public parking lot or the Whole Foods Market Parking lot. Combined, these parking areas and in-lieu parking would supply 115 parking spaces during the weekday lunch period and 128 spaces during the weekday dinner period and on weekends. This exceeds the BHMC parking requirement outlined in Table 9.

Site Access. The existing surface parking lot is accessed via a driveway off of N. Canon Drive and from the rear alley. The project would remove the driveway on N. Canon Drive and have vehicular access to the subterranean garage from the rear alley. The garage would be valet-only, so restaurant patrons would drop their car off at the front of the project site and a valet would drive the car down the one-way alley to be parked. Employees of the restaurant and employees and visitors of the existing office building would arrive by driving down the one-way southbound alley and valet attendants would then drive their vehicles and park them within the garage. When leaving, employees and visitors would have their vehicle retrieved by a valet attendant. Valet service would operate between approximately 8:00 AM and the close of the restaurant on weekdays and 10:00 AM and the close of the restaurant on weekends.

Because the alley is one-way, traffic flow is able to proceed with minor conflicts. During busy valet periods, the leased surface parking spaces at 270 N. Canon Drive would be able to be used to queue vehicles waiting to be moved to the garage. This would prevent blockage of the alley by project vehicles waiting to be parked. As all vehicle access to the project site would be operated by valet attendants, patrons to the project site would be able to immediately access the project upon dropping off their vehicle. This system would allow for adequate site access for vehicles and patrons to the project site.

Construction Traffic. Construction traffic impacts on roadway facilities would be significant if the construction of a project creates a prolonged impact due to lane closure, emergency vehicle access, traffic hazards to bicycles and/or pedestrians, damage to the roadbed, truck traffic on roadways not assigned as truck routes, and other similar impediments to circulation. Based on the following assumptions, it is not anticipated that project construction would cause significant traffic impacts:

- It is anticipated that the construction vehicles, haul trucks, and construction workers would access the site from N. Canon Drive, which is an approved heavy haul route (Beverly Hills, March 2009).
- The project would not involve road closures that would affect emergency vehicle access or create hazards to bicycles and pedestrians.
- The total number of construction trips would be staggered throughout the day, with many trips occurring during off-peak hours.

To reduce temporary disruptions on the adjacent roadway network due to construction activities, the project would be expected to comply with the standard City of Beverly Hills condition of approval requiring preparation and approval of a Construction Management Plan prior to the initiation of construction activities. This plan would address the following items:

- Maintain existing access for land uses in proximity of the project site during project construction.
- Schedule deliveries and hauling of construction materials to non-peak travel periods, including night hours and weekends.
- Coordinate deliveries and hauling to reduce the potential of trucks waiting to load or unload for extended periods of time.
- Minimize obstruction of through traffic lanes on N. Canon Drive.
- Meet the requirements of the Community Development and Public Works/Transportation Departments with respect to construction scheduling and coordination with other construction near the project site, heavy hauling and material delivery routing, types of trucks, use limitations per hour, hours of operations, traffic plan submission for different stages, pedestrian and vehicular access, street use permit process, daily street cleanliness and maintenance and safety after work, and parking management for construction workers.

Additionally, the maximum number of construction parking spaces would be identified, and the applicant would be required to accommodate parking either at the project site or at a nearby site from which workers would be transported to the site by shuttles. With the provision of such parking, it is anticipated that for workers traveling to the project site there would be sufficient on-site access. Therefore, no additional management plans for construction workers are necessary.

Finally, it should be noted that construction traffic impacts are temporary by their nature, and would have no effect on traffic and circulation beyond the construction period.

Conclusion. The assessment of traffic impacts, parking supply and demand, site access, and construction impacts determined that there would be no significant impacts.

B. NOISE

Noise Characteristics and Measurement. Noise level, or volume, is generally measured in decibels (dB) using the A-weighted sound pressure level (dBA). The A-weighting scale is an adjustment to the actual sound power levels to be consistent with that of human hearing response, which is most sensitive to frequencies around 4,000 hertz (about the highest note on a piano) and less sensitive to low frequencies (below 100 hertz).

One of the most frequently used noise metrics that considers duration as well as sound power level is the equivalent noise level (Leq). The Leq is defined as the steady A-weighted level that is equivalent to the same amount of energy as that contained in the actual varying levels over a period of time (essentially, Leq is the average sound level).

Noise Standards. The City of Beverly Hills' General Plan incorporates comprehensive goals, policies, and implementation actions related to noise and acceptable noise levels. These policies address unnecessary, excessive, and annoying noise levels and sources, such as vehicles, construction, special sources (e.g., radios, musical instruments, animals) and stationary sources (e.g., heating and cooling systems, mechanical rooms).

For traffic related noise, impacts would be significant if project-generated traffic results in the exposure of sensitive receptors to a perceptible increase in roadway noise. Roughly a doubling of traffic volume would be necessary to generate a perceptible increase in roadway noise levels of 3 dBA or more.

On-site activities would have significant impacts if they create noise exceeding the standards as identified by the applicable noise zone for the project site. The project site is zoned for commercial use, but adjacent properties to the south are zoned for multi-family residential use. The nearest sensitive receptors to the project site are multi-family residences located approximately 30 feet to the northeast of the project site (across the alley).

Existing Ambient Noise Levels. The primary source of noise in the vicinity of the project site is motor vehicle traffic, including automobiles, trucks, buses, and motorcycles. Along the alley, the main noise source is mechanical equipment from the surrounding businesses. Roadways that contribute to ambient noise near the project site include N. Canon Drive and N. Crescent Drive.

To determine existing ambient noise levels on the project site, three 15-minute weekday noise measurements were taken in the vicinity of the project site during PM peak traffic hours between 5:00 p.m. and 6:00 p.m. on September 6, 2016, using an ANSI Type II integrating sound level meter. The first noise measurement was located on N. Canon Drive. The second measurement was located in the alley behind the project site. The third measurement was located to the southeast of the project site, along Clifton Way. Table 10 lists the measured noise levels. As shown in Table 10, noise levels were measured at 62.9 dBA Leq along N. Canon Drive, 62.5 dBA Leq along the alley, and 59.4 dBA Leq along Clifton Way. Noise measurement data is included in Appendix B.

Table 10
On-Site Noise Measurement Results

Measurement Number	Measurement Location	Noise Sources	Sample Time	L_{eq} (dBA)
1	N. Canon Drive	Street Traffic	5:58 PM	62.9
2	Alleyway	Mechanical Equipment	5:39 PM	62.5
3	Clifton Way	Street Traffic	5:12 PM	59.4

Source: Field visit on September 6, 2016, using ANSI Type II Integrating sound level meter. Refer to Appendix B for noise monitoring data sheets.

Construction Noise. The project would result in temporary noise level increases during site preparation, excavation, paving, and building construction. The grading phase of project construction tends to create the highest noise levels because of the operation of heavy equipment. As shown in Table 11, noise levels associated with heavy equipment typically range from about 76 to 95 dBA at a reference distance of 50 feet from the source and from 74 to 93 dBA at a distance of 30 feet (representing the nearest sensitive receptors).

Table 11
Typical Noise Levels at Construction Sites

Equipment	Typical Level (dBA)	
	50 Feet	30 Feet
Air Compressor	81	85
Backhoe	80	84
Concrete Mixer	85	89
Jackhammer	88	92
Paver	89	93
Saw	76	74
Scraper	89	93
Truck	88	92

Source: Hanson, Towers, and Meister, May 2006.
Note: Pile drivers are not permitted onsite pursuant to the City of Beverly Hills Building and Safety Department (Ryan Gohlich, personal communication, April 2012).

Pursuant to the City's noise ordinance (BHMC Sections 5-1-202 and 5-1-205), a significant impact would occur if construction activities occurring on the project site would result in an increase of 5 dBA above the ambient level outside the hours permitted by the City's noise ordinance (i.e., between the hours of 6:00 PM and 8:00 AM on weekdays, or at any time on Saturday, Sunday, or a public holiday). Further, construction work within 500 feet of a residential zone is prohibited on Saturdays. Because construction would be temporary and would only occur during the hours permitted by the City's noise ordinance, impacts due to construction noise would be less than significant.

Construction Vibration. Vibration is a unique form of noise because its energy is carried through buildings, structures, and the ground, whereas most ambient noise is simply carried through the air. Thus, vibration is generally felt rather than heard. Some vibration effects can be caused by noise; e.g., the rattling of windows from truck pass-bys. This phenomenon is caused by the coupling of the acoustic energy at frequencies that are close to the resonant frequency of the material being vibrated. Typically, groundborne vibration generated by manmade activities attenuates rapidly as distance from the source of the vibration increases and vibration rapidly diminishes in amplitude with distance from the source. The ground motion caused by vibration is measured as particle velocity in inches per second and is referenced as vibration decibels (VdB) in the U.S.

The vibration velocity level threshold of perception for humans is approximately 65 VdB. A vibration velocity of 75 VdB is the approximate dividing line between barely perceptible and distinctly perceptible levels for many people. Most perceptible indoor vibration is caused by sources within buildings such as operation of mechanical equipment, movement of people, or the slamming of doors. Typical outdoor sources of perceptible groundborne vibration are construction equipment, steel wheeled trains, and traffic on rough roads. If a roadway is smooth, the groundborne vibration from traffic is barely perceptible. The range of interest is from approximately 50 VdB, which is the typical background vibration velocity, to 100 VdB, which is the general threshold where minor damage can occur in fragile buildings.

Significant impacts occur when vibration or groundborne noise levels exceed the Federal Railroad Administration (FRA) maximum acceptable level threshold of 65 VdB for buildings where low ambient vibration is essential for interior operations (such as hospitals and recording studios), 72 VdB for residences and buildings where people normally sleep, including hotels, and 75 VdB for institutional land uses with primary daytime use (such as churches and schools).

Construction activities that would occur on the project site have the potential to generate groundborne vibration. Table 12 identifies various velocity levels for the types of construction equipment that are likely to operate at the project site during construction.

Table 12
Vibration Source Levels for Construction Equipment

Equipment	Approximate VdB	
	25 Feet	30 Feet
Large Bulldozer	87	85
Loaded Trucks	86	83
Small Bulldozer	58	55
Jackhammers	79	76

Source: Federal Railroad Administration, 2012.
Note: Pile drivers are not permitted on-site pursuant to the City of Beverly Hills Building and Safety Department (Ryan Gohlich, personal communication, April 2012).

Based on information presented in Table 12, vibration levels could be approximately 85 VdB at the existing residences located 30 feet northeast of the project site. As noted above, impacts would be significant if vibration levels exceeded 72 VdB during recognized sleep hours (as established by the Federal Railway Administration for places were people normally sleep). Though vibration levels may exceed 72 VdB at nearby sensitive receptors, construction activities would be limited to daytime hours between 8:00 AM and 6:00 PM Monday through Friday, per BHMC Section 5-1-206. Therefore, vibration levels would not affect residential uses that are sensitive to vibration levels when sleep is disturbed. In addition, the project would not exceed vibration levels that could potentially damage nearby buildings.

Construction activity would be temporary and the use of heavy equipment would be primarily limited to the excavation, site preparation, and exterior construction phases. As construction of the outer shell of the building progresses, the building itself would contain much of the construction activity, and the likelihood of utilizing bulldozers and jackhammers decreases. Trucks would still be anticipated to bring construction materials to the site, which may periodically generate vibrations that would be felt by nearby receptors; however, the vibrations would not be likely to persist for long periods. Because vibration would be a temporary impact during construction and would not occur during normal sleep hours, impacts would be less than significant.

Structure-borne vibration from elevator operations can be an issue in residential buildings when bedrooms share a wall with a lift shaft. However, structure-borne vibration from lift car rollers is typically minimized by the standard use of rubber tires (Picu, 2007), and would not result in significant vibration impacts to the proposed onsite commercial uses or offsite residential uses. Concrete slabs and walls attenuate vibration noise sufficiently to not impact nearby buildings.

Operational Noise. Existing uses near the project site may periodically be subject to noises associated with operation of the project, including exterior noise that is typical of commercial development and parking garages: conversations; trash hauling; delivery traffic, loading and unloading; tire and engine noise from the movement of vehicles on driveways; noise associated with rooftop ventilation and heating systems; and beeping from the locking and unlocking of motor vehicles. Additionally, conversations taking place in the ground-floor outdoor dining area or the third-floor dining area when the roof is retracted may be heard at adjacent residences. However, this activity would not substantially contribute to average ambient noise levels and would be comparable to similar activity in the alley and at the nearby residences.

In addition, the project would generate traffic noise from vehicles traveling to and from the project site. As shown in Table 6, the project would generate a net gain of approximately 706 average daily trips, 40 midday peak hour trips and 64 PM peak hour trips.

Existing traffic volumes and project generated traffic volumes are summarized in Table 13.

Table 13
Vehicle Trip Increase by Roadway

Roadway	Existing Midday/PM Peak Hour Trips [a]	Net New Project Trips [c]	Percentage Increase (c/a*100) [d]
N. Canon Drive	490 / 467	40 / 64	8.1% / 13.7%
Dayton Way	392 / 717	40 / 64	10.2% / 8.9%
Clifton Way	354 / 328	40 / 64	11.2% / 19.5%
Alley	47 / 41	40 / 64	85% / 156%

Source: Traffic Study, Appendix A

Roughly a doubling of traffic volume would be necessary to generate a perceptible increase in roadway noise levels of 3 dBA or more. While the trips generated by the project would not double traffic volumes on N. Canon Drive, Dayton Way, and Clifton Way, traffic in the alley would increase by more than double during the PM peak hour (from 41 to 105 trips). While a doubling of traffic volume can result in a noticeable noise increase, the alley's main noise source is the existing mechanical equipment from surrounding buildings, not the relatively low amount of vehicle traffic. Because of this, the more than doubling of traffic would not create the typical increase in dBA.

The project would generate an estimated 706 average daily trips (ADT) in the alley, increasing ADT from 477 vehicles to 1,183. According to the U.S. Department of Housing and Urban Development (HUD) DNL Calculator, an ADT of 1,183 vehicles on the alley would generate roadway noise of 54 dBA (HUD, 2016). This is less than the measured noise level of 62.4 dBA Leq created by the mechanical equipment and would not result in an increase to noise levels in the alley.

Conclusion. The project is not expected to result in a significant long-term increase in traffic noise levels, and temporary construction noise would be less than significant, based on compliance with the City's time restrictions on construction activities, contained in the City's Municipal Code. The proposed commercial uses of the project would not be expected to have a significant impact on daily noise at the project site. Therefore, noise-related impacts resulting from implementation of the project would be less than significant.

C. AIR QUALITY

A significant adverse air quality impact may occur when a project individually or cumulatively interferes with progress toward the attainment of the ozone standard by releasing emissions that equal or exceed the established long term quantitative thresholds for pollutants, or causes an exceedance of a state or federal ambient air quality standard for any criteria pollutant. Because the project site is located within the South Coast Air Basin and falls under the jurisdiction of the South Coast Air Quality Management District (SCAQMD), this air quality analysis conforms to the methodologies recommended in SCAQMD's CEQA Air Quality Handbook (1993). The following significance thresholds have been recommended by the SCAQMD for project operations within the South Coast Air Basin:

- *55 pounds per day of ROG;*
- *55 pounds per day of NO_X;*
- *550 pounds per day of CO;*
- *150 pounds per day of PM_{10}; and*
- *55 pounds per day of $PM_{2.5}$.*

Construction-related air quality impacts are considered significant if emissions associated with construction activity would exceed adopted SCAQMD thresholds. Temporary construction emission thresholds have been recommended by the SCAQMD on a daily basis as follows:

- *75 pounds per day of ROG;*
- *100 pounds per day of NO_X;*
- *550 pounds per day of CO;*
- *150 pounds per day of PM_{10}; and*
- *55 pounds per day of $PM_{2.5}$.*

In addition to the regional air quality thresholds shown above, SCAQMD has developed Localized Significance Thresholds (LSTs) in response to the Governing Board's Environmental Justice Enhancement Initiative (1-4), which was prepared to update the SCAQMD's CEQA Air Quality Handbook. LSTs were devised in response to concern regarding exposure of individuals to criteria pollutants in local communities. LSTs represent the maximum emissions

from a project that will not cause or contribute to an air quality exceedance of the most stringent applicable federal or state ambient air quality standard at the nearest sensitive receptor, taking into account factors such as ambient concentrations in each source receptor area (SRA), project size, and distance to the sensitive receptor. However, LSTs only apply to emissions within a fixed stationary location, including idling emissions during both project construction and operation, and are not applicable to mobile sources such as cars on a roadway (SCAQMD, Final Localized Significance Threshold Methodology, June 2003). LSTs have been developed for NO_X, CO, PM_{10}, and $PM_{2.5}$. Since the majority of emissions from the proposed restaurant space would be generated by vehicle trips on roadways, LSTs for operational emissions would not apply to the project. Construction LSTs for the 0.33-acre project site were derived based on the SCAQMD's LSTs for one-acre project sites in SRA 2 for Northwest Coastal LA County.

Operational Emissions. Long-term operational emissions associated with the project are those associated with vehicle trips (mobile emissions) and the use of natural gas, consumer products, and architectural coatings (area source emissions) upon buildout of the project. Pollutant emissions associated with the project (shown in Table 14) were quantified using the California Emissions Estimator Model (CalEEMod), version 2013.2.2, based on the proposed use and the number of associated vehicle trips generated by the project as discussed above. The emissions calculations in this report are conservative, as they are based on slightly higher traffic estimates than those in the updated traffic study included in Appendix A. The existing parking lot would be removed as part of the project; however, because emissions generated from the operation of a surface parking lot are primarily from mobile sources, which would not be eliminated as part of the project and would still be associated with the project's garage for parking, the existing emissions from operational use would not be affected.

The project would comply with the California Green Building Code, as well as incorporate features to be 15% more energy efficient than State standards. These features include water efficient landscaping and irrigation, low flow fixtures in restrooms, a high degree of natural ventilation, high performance heating and cooling systems, high performance building cladding assemblies utilizing dual glazing, low-e glass, and high insulation, customizable lighting with automatic shut off, and recyclable trash and waste procedures. These features would further reduce the operational emissions of the project.

Table 14
Estimated Operational Emissions

	Emissions (lbs/day)				
	ROG	NO_X	CO	PM_{10}	$PM_{2.5}$
Emissions from Proposed 3-Story Restaurant Building with Subterranean Parking	4.8	4.2	15.4	2.2	0.7
SCAQMD Thresholds	*55*	*55*	*550*	*150*	*50*
Exceed Thresholds?	***No***	***No***	***No***	***No***	***No***

Table 14
Estimated Operational Emissions

	Emissions (lbs/day)				
	ROG	NO_X	CO	PM_{10}	$PM_{2.5}$

Source: CalEEMod v. 2013.2.2

( ) denotes reduction

Note: Please see Appendix C for complete modeling results. For a conservative estimate of project emissions, construction and operational emissions were modeled and reported for the maximum day during the winter, since emission estimates are typically higher in the winter months compared to the summer months. Winter emission estimates are then compared to the SCAQMD thresholds measured in pounds-per-day. The annual emissions listed in the tables in Appendix C show the average annual emissions in terms of metric tons per year. These estimates are used for analysis of greenhouse gas emissions impacts, since the greenhouse gas emission thresholds are based on metric tons per year.

As shown in Table 14, the emissions generated by the project would not exceed the SCAQMD's daily operational thresholds and would not significantly affect regional air quality. Therefore, the impact is less than significant for the project.

Construction Emissions. Development of the project would involve site grading, excavation, renovation, and other construction-related activities that have the potential to generate substantial air pollutant emissions. Construction is estimated to occur over 18 months. Temporary construction emissions from these activities were estimated using CalEEMod, based on the gross amount of proposed new commercial and retail/restaurant space and the new parking. Table 15 shows the maximum daily construction emissions.

Table 15
Estimated Construction Emissions

	Emissions (lbs/day)				
	ROG	NO_X	CO	PM_{10}	$PM_{2.5}$
Maximum Daily Emissions	6.0	26.7	20.6	2.7	2.0
SCAQMD Threshold	*75*	*100*	*550*	*150*	*55*
Exceed SCAQMD Threshold?	***No***	***No***	***No***	***No***	***No***
Maximum Daily Onsite Emissions	*2.8*	*12.7*	*8.6*	*1.5*	*1.1*
Localized Significance Thresholds[1]	*N/A*	*66*	*339*	*2*	*2*
Exceed LST?	***No***	***No***	***No***	***No***	***No***

Source: CalEEMod v. 2013.2.2

[1] Allowable emissions (lbs/day) as a function of receptor distance (25 meters) from site boundary, as derived from a regression analysis on the LSTs for one-acre sites in Source Receptor Area 2: Northwest Coastal LA County. Source: http://www.aqmd.gov/home/regulations/ceqa/air-quality-analysis-handbook/localized-significance-thresholds

Note: Please see Appendix C for complete modeling results. For a conservative estimate of project emissions, construction and operational emissions were modeled and reported for the maximum day during the winter, since emission estimates are typically higher in the winter months compared to the summer months. Winter emission estimates are then compared to the SCAQMD thresholds measured in pounds-per-day.

As indicated in Table 15, emissions from construction activities would not exceed SCAQMD daily significance thresholds and would not result in any significant air quality impacts. Moreover, SCAQMD Rule 403 requires the following measures to reduce fugitive dust; these are required to be implemented at all construction sites located within the South Coast Air Basin. Compliance with the SCAQMD Rule 403 measures would further reduce construction emissions.

1. ***Minimization of Disturbance.*** *Construction contractors should minimize the area disturbed by clearing, grading, earth moving, or excavation operations to prevent excessive amounts of dust.*
2. ***Soil Treatment.*** *Construction contractors should treat all graded and excavated material, exposed soil areas, and active portions of the construction site, including unpaved on-site roadways to minimize fugitive dust. Treatment shall include, but necessarily be limited to, periodic watering, application of environmentally safe soil stabilization materials, and/or roll compaction as appropriate. Watering shall be done as often as necessary, and at least twice daily, preferably in the late morning and after work is done for the day.*
3. ***Soil Stabilization.*** *Construction contractors should monitor all graded and/or excavated inactive areas of the construction site at least weekly for dust stabilization. Soil stabilization methods, such as water and roll compaction and environmentally safe dust control materials, shall be applied to portions of the construction site that are inactive for over four days. If no further grading or excavation operations are planned for the area, the area shall be seeded and watered until landscape growth is evident, or periodically treated with environmentally safe dust suppressants, to prevent excessive fugitive dust.*
4. ***No Grading During High Winds.*** *Construction contractors should stop all clearing, grading, earth moving, and excavation operations during periods of high winds (20 miles per hour or greater, as measured over a one-hour period).*
5. ***Street Sweeping.*** *Construction contractors should sweep all on-site driveways and adjacent streets and roads at least once per day, preferably at the end of the day, if visible soil material is carried over to adjacent streets and roads.*

Conclusion. The project would not generate significant air quality impacts. Additionally, as discussed in the Traffic section, this project would not result in significant increases in traffic at intersections. Thus, the project would not require analysis for CO hotspots, based on the recommendations contained in Caltrans' Transportation Project CO Protocol Manual.

D. GREENHOUSE GAS EMISSIONS

Climate Change and Greenhouse Gases. Climate change is the observed increase in the average temperature of the Earth's atmosphere and oceans along with other substantial changes in climate (such as wind patterns, precipitation, and storms) over an extended period of time. Climate change is the result of numerous, cumulative sources of greenhouse gases (GHGs). GHGs contribute to the "greenhouse effect," which is a natural occurrence that helps regulate the temperature of the planet. The majority of radiation from the Sun hits the Earth's surface and warms it. The surface in turn radiates heat back towards the atmosphere, known as infrared radiation. Gases and clouds in the atmosphere trap and prevent some of this heat from escaping back into space and re-radiate it in all directions. This process is essential to supporting life on Earth because it warms the planet by approximately 60° Fahrenheit. Emissions from human activities since the beginning of the industrial revolution (approximately 250 years ago) are

adding to the natural greenhouse effect by increasing the gases in the atmosphere that trap heat, thereby contributing to an average increase in the Earth's temperature.

GHGs occur naturally and from human activities. Human activities that produce GHGs are the burning of fossil fuels (coal, oil and natural gas for heating and electricity, gasoline and diesel for transportation); methane from landfill wastes and raising livestock, deforestation activities; and some agricultural practices. Greenhouse gases produced by human activities include carbon dioxide (CO2), methane (CH4), nitrous oxide (N2O), hydrofluorocarbons (HFCs), perfluorocarbons (PFCs), and sulfur hexafluoride (SF6). Since 1750, it is estimated that the concentrations of carbon dioxide, methane, and nitrous oxide in the atmosphere have increased over by 36%, 148%, and 18% respectively, primarily due to human activity. Emissions of GHGs affect the atmosphere directly by changing its chemical composition while changes to the land surface indirectly affect the atmosphere by changing the way in which the Earth absorbs gases from the atmosphere. Potential impacts in California of global warming may include loss in snow pack, sea level rise, more extreme heat days per year, more high ozone days, more large forest fires, and more drought years (CEC, March 2009).

The adopted CEQA Guidelines provide regulatory guidance on the analysis and mitigation of GHG emissions in CEQA documents, while giving lead agencies the discretion to set quantitative or qualitative thresholds for the assessment and mitigation of GHGs and climate change impacts. The 2008 SCAQMD threshold considers emissions of over 10,000 metric tons carbon dioxide equivalent (CO2e) per year to be significant. However, the SCAQMD's threshold applies only to stationary sources and is expressly intended to apply only when the SCAQMD is the CEQA lead agency. Although not yet adopted, the SCAQMD has a recommended tiered GHG significance threshold (SCAQMD, 2010). Under Tier 2, projects would be less than significant if the project is consistent with an approved GHG reduction plan. Tier 3 includes screening level quantitative thresholds. As the City of Beverly Hills does not have an adopted GHG reduction plan or Climate Action Plan, the project was compared to Tier 3 quantitative thresholds. SCAQMD has a recommended Tier 3 screening level quantitative threshold for all land use types of 3,000 metric tons CO2e / year.

Project GHG Emissions. GHG emissions associated with the project were estimated using CalEEMod. The analysis focuses on CO2, N2O, and CH4 as these are the GHG emissions that onsite development would generate in the largest quantities. Emissions of fluorinated gases, such as HFCs, PFCs, and SF6 would not be significant since fluorinated gases are primarily associated with industrial processes. Complete CalEEMod results and assumptions can be viewed in Appendix C.

Construction Emissions. Based on the CalEEMod results, construction activity for the project would generate an estimated 233 metric tons CO_2e (as shown in Table 16) during construction. Amortized over a 30-year period (the assumed life of the project), construction of the project would generate an estimated 7.8 metric tons CO_2e per year. Emissions from construction are amortized for the purpose of comparison with annual operational emissions over the estimated 30-year life of the project.

Table 16
Estimated GHG Construction Emissions

	Construction Emissions (CO_2e)
Total Emissions	256 metric tons
Amortized over 30 years	8.5 metric tons per year

Source: CalEEMod, 2013.2.2. See Appendix C for GHG emission worksheets and assumptions.

Operational Indirect, Stationary Direct, and Mobile Emissions. Long-term emissions relate to area sources, energy use, solid waste, water use, and transportation. Each of these sources is discussed below.

Area Source Emissions. Area emissions include consumer product use, the reapplication of architectural coatings, and landscape maintenance equipment. The project would utilize low VOCs in building materials. As shown in Table 17, area emissions are estimated at less than one metric ton CO_2e per year.

Energy Use. Operation of the project would consume both electricity and natural gas. Project operation would consume an estimated 1,102,426 kilowatt-hours [kWh] of electricity and 4,835,570 thousand British thermal units (kBTU) of natural gas per year (refer to Appendix C). The generation of electricity used by the project would occur at offsite power plants, much of which would be generated by the combustion of fossil fuels that yields CO_2, and to a smaller extent N_2O and CH_4. As discussed above, annual electricity and natural gas emissions was calculated using CalEEMod, which has developed emission factors, based on the mix of fossil-fueled generation plants, hydroelectric power generation, nuclear power generation, and alternative energy sources associated with the regional grid. Electricity consumption associated with the project would generate approximately 229 metric tons CO_2e per year. Natural gas use would generate approximately 175 metric tons CO_2e per year. Thus, overall energy use from the project would generate an estimated 404 metric tons CO_2e per year.

Solid Waste. The CalEEMod output for greenhouse gas emissions from solid waste relies on current commercial waste disposal rates provided by CalRecycle. The project is assumed to have a waste diversion rate of 78 percent, which is standard in the City of Beverly Hills. Solid waste associated with the project would generate an estimated six metric tons of CO_2e per year.

Water Use. Water use for the project is considers low flow restroom fixtures and high efficiency landscaping and irrigation. Based on the amount of electricity generated in order to supply and convey water for the project, the project would generate an estimated 22 metric tons of CO_2e per year.

Transportation. Mobile source GHG emissions were estimated using the average daily trips for the project and based on the total vehicle miles traveled (VMT) estimated in CalEEMod. The number of vehicle trips used in this analysis is a conservative estimate based on

slightly higher traffic estimates than those in the updated traffic study (Appendix A). Based on the higher traffic estimates, the project would generate about 1,004,899 annual VMT. The project would emit an estimated 421 metric tons of CO_2e per year from CO_2 and CH_4. CalEEMod does not calculate N_2O emissions related to mobile sources. As such, N_2O emissions were calculated based on the project's VMT using calculation methods provided by the California Climate Action Registry General Reporting Protocol (January 2009). The project would emit an estimated 22 metric tons of CO_2e per year from N_2O. Thus, the total mobile emissions would be 443 metric tons of CO_2e per year.

Combined Construction, Stationary and Mobile Source Emissions. Table 17 combines the construction, operational, and mobile GHG emissions associated with development of the project, and subtracts operational and mobile emissions associated with existing development on the project site.

For the project, the combined annual gross emissions are estimated at 1,794 metric tons CO_2e per year. As there would be an offset of emissions from the elimination of the existing surface parking use, the net emissions of the project would be an estimated 1,792 metric tons CO_2e per year. Thus, GHG emissions associated with the project would not exceed the 3,000 metric tons CO_2e per year threshold of significance, and impacts on climate change from GHG emissions would be less than significant.

Table 17
Combined Annual Emissions of Greenhouse Gases

Emission Source	Annual Emissions (Metric Tons CO_2e)
Project	
Project Construction	8.5
Project Operational *Area* *Energy* *Solid Waste* *Water*	 <0.1 404 6 22
Project Mobile Project Mobile N_2O Emissions	421 22
Project Subtotal	
SCAQMD Threshold	***3,000 metric tons CO_2e***
Total Emissions from Project	**884 metric tons CO_2e**

Source: Tables 2.1 and 2.2 in CalEEMod annual worksheets, see Appendix C for calculations and for GHG emission factor assumptions.

( ) denotes subtraction

Conclusion. The project is not expected to generate GHG emissions that would result in a significant impact.

E. WATER QUALITY

Urban runoff can have a variety of deleterious effects. Oil and grease contain a number of hydrocarbon compounds, some of which are toxic to aquatic organisms at low concentrations. Heavy metals such as lead, cadmium, and copper are the most common metals found in urban stormwater runoff. These metals can be toxic to aquatic organisms, and have the potential to contaminate drinking water supplies. Nutrients from fertilizers, including nitrogen and phosphorous, can result in excessive or accelerated growth of vegetation or algae, resulting in oxygen depletion and additional impaired uses of water.

Currently, the project site is entirely covered with impervious surfaces. Stormwater runoff currently enters storm drains on N. Canon Drive and flows to existing City drainage facilities. Neither the permeability nor the hydrology of the site would substantially change with project implementation, as the amount of impervious surfaces with the project would be comparable to compared to existing conditions.

Low Impact Development (LID) practices minimize impacts on water quality by requiring Best Management Practices (BMPs) to be utilized to control pollutant discharge. This applies to all development projects that are at least one acre in size (BHMC 9-4-508). Although the project site is only 0.33 acre in size, the project falls under the category of a restaurant with 5,000 sf or more of impervious surface area; therefore, the project would be subject to the current municipal National Pollutant Discharge Elimination System (NPDES) permit (BHMC 9-4-508(C)(1)(e)).

Conclusion. Due to the small size of the project, the project would not adversely affect underground aquifers, drainage patterns, or surface water quality. Impacts related to water quality would be less than significant.

Criterion (e) *The site can be adequately served by all required utilities and public services.*

The project would be located in an existing highly urban area served by existing public utilities and services. A substantial increase in demand for services or utilities would not be anticipated with implementation of the project. The City of Beverly Hills provides water, sewer, and solid waste collection services to the existing commercial and residential development and would continue to provide these services to the project. Other services, including gas and electricity, would also continue to be provided to the project by existing service providers. Thus, the project meets this criterion for exemption.

Historic Resources. State CEQA Guidelines Section 15300.2 states that a categorical exemption "shall not be used for a project which may cause a substantial adverse change in the significance of a historical resource." The project site is developed with a surface parking lot and a three-story commercial building. Neither the office building nor the parking lot located on the project site are listed as a historic resource in the City's 1985-1986 Beverly Hills Historic Resources Survey. The project site is not known to be associated with events that have made a significant contribution to California's history and cultural heritage nor with the lives of persons who have historic importance. The project site does not appear to be eligible for listing on the National Register of Historic Places or the California Register of Historical Resources, or for designation as a City landmark. The nearest properties on the Local Register of Historic

Properties are the Millard Sheets Artwork Installation and the Beverly Hills Post Office, both located approximately 0.25 mile north of the project site. The Millard Sheets Artwork Installation was constructed in 1974 and the Beverly Hills Post Office was constructed in 1933. Because the proposed commercial building would be located a quarter mile away, on a different street, and surrounded by other buildings, it would not adversely affect the visual context of either of these local historic properties or any other historic resources. The project would not result in a substantial adverse change in the significance of a historic resource.

5. SUMMARY

Based on this analysis, the 250-260 N. Canon Drive Project meets all criteria for a Class 5 and a Class 32 Categorical Exemption pursuant to Sections 15305 and 15332 of the *State CEQA Guidelines*.

6. REFERENCES

Beverly Hills, City of. *Approved Heavy Haul Routes.* March 2009. Available online at: http://www.beverlyhills.org/cbhfiles/storage/files/filebank/4946--HeavyHaul_Routes.pdf

Beverly Hills, City of. *Beverly Hills Historic Resources Survey 1985-1986.* Available online at: http://www.beverlyhills.org/cbhfiles/storage/files/6333100111590038901/HistoricResourcesInventory(1985-1986).pdf

Beverly Hills, City of, General Plan, updated January 2010.

Beverly Hills, City of. Municipal Code. Available online at: http://www.sterlingcodifiers.com/codebook/index.php?book_id=466

California Air Pollution Control Officers Association. *CEQA and Climate Change: Addressing Climate Change through California Environmental Quality Act (CEQA).* January 2008.

California Climate Action Registry General Reporting Protocol. Version 3.1 (January 2009). Available online at: http://sfenvironment.org/sites/default/files/fliers/files/ccar_grp_3-1_january2009_sfe-web.pdf

[CEC] California Energy Commission. *Inventory of California Greenhouse Gas Emissions and Sinks: 2000-2004.* December 2006.

Caltrans, Transportation Project CO Protocol Manual, revised 1997.

Federal Railroad Administration. *High-Speed Ground Transportation Noise and Vibration Impact Assessment.* September 2012. Available online at: http://www.fra.dot.gov/eLib/Details/L04090

Gohlich, Ryan. Associate Planner, City of Beverly Hills. Personal Communications, April 2012.

Hanson, Carl, David Towers, and Lance Meister. *Transit Noise and Vibration Impact Assessment.* May 2006.

Institute of Transportation Engineers (ITE). *Trip Generation Manual,* 9th Edition. 2012.

Metro. Congestion Management Program for Los Angeles County. 2010.

Picu, Dr. Mihaela, Dr. Ana Picu. Study of Noise Produced by Elevators Inside Buildings. 2007. Available: http://www.ann.ugal.ro/im/anale-fib-2007_vechi/anale-fib-2007-08.pdf

South Coast Air Quality Management District (SCAQMD). *CEQA Air Quality Handbook.* 1993.

South Coast Air Quality Management District (SCAQMD). *Final Localized Significance Threshold Methodology*. June 2003, revised July 2008. Available online at: http://www.aqmd.gov/docs/default-source/ceqa/handbook/localized-significance-thresholds/final-lst-methodology-document.pdf?sfvrsn=2

South Coast Air Quality Management District (SCAQMD). *Localized Significance Thresholds.* Available online at: http://www.aqmd.gov/home/regulations/ceqa/air-quality-analysis-handbook/localized-significance-thresholds

South Coast Air Quality Management District (SCAQMD). 2010. Greenhouse Gas CEQA Significance Threshold Stakeholder Working Group Meeting #15. Available online at: http://www.aqmd.gov/docs/default-source/ceqa/handbook/greenhouse-gases-(ghg)-ceqa-significance-thresholds/year-2008-2009/ghg-meeting-15/ghg-meeting-15-main-presentation.pdf?sfvrsn=2

U.S. Department of Housing and Urban Development (HUD). DNL Calculator. Web Accessed September 2016. Available: https://www.hudexchange.info/environmental-review/dnl-calculator/

Appendix A

Traffic Impact Study

TRAFFIC IMPACT STUDY FOR PROPOSED
RIVEA RESTAURANT PROJECT,
250-260 N. CANON DRIVE, CITY OF BEVERLY HILLS

Prepared for:

Neu Investment Corporation

REGISTERED PROFESSIONAL ENGINEER
RYAN JOHN KELLY
No. 2547
EXP. 9/30/2017
TRAFFIC
STATE OF CALIFORNIA

Prepared by:

Crain & Associates
300 Corporate Pointe, Suite 470
Culver City, California 90230
(310) 473-6508
www.crainandassociates.com

September 12, 2016

TABLE OF CONTENTS

1.0 INTRODUCTION 1

1.1 Study Area 1

2.0 PROJECT LOCATION AND DESCRIPTION 4

2.1 Project Site Location 4

2.2 Existing Project Site Use 4

2.3 Proposed Project Description 4

2.4 Project Parking 6

2.4.1 Code Parking Requirement 6

2.4.2 Project Parking Supply 7

3.0 PROJECT SITE ACCESS AND CIRCULATION 9

3.1 Existing Project Site Access 9

3.2 Proposed Project Site Access 9

4.0 EXISTING CONDITIONS 10

4.1 Existing Street System 10

4.1.1 Roadway Classifications 10

4.1.2 Roadway Descriptions 10

4.2 Existing Public Bus Transit Services 11

4.3 Existing Pedestrian and Bicycle Facilities 11

4.4 Existing Year 2016 Traffic Volumes 11

4.4.1 Intersection Traffic Counts 11

4.4.2 Alley Segment Daily Traffic Count 16

4.5 Existing Intersection Operating Conditions 16

4.5.1 City of Beverly Hills Intersection Analysis Methodologies 16

4.5.2 Existing Level of Service Results 18

5.0 TRAFFIC FORECASTING METHODOLOGY 19

5.1 Project Traffic Generation 19

5.2 Project Trip Distribution 20

5.3 Project Trip Assignment 21

6.0 EXISTING WITH PROJECT TRAFFIC CONDITIONS 28

7.0 FUTURE TRAFFIC CONDITIONS 31

7.1 Ambient Traffic Growth 31

7.2 Related Projects Traffic Characteristics 31

7.3 Future Year 2018 Traffic Volumes 32
7.4 Future Highway Improvements 32
8.0 TRAFFIC IMPACT ANALYSIS METHODOLOGY 40
8.1 Intersection Analysis Methodology 40
8.2 Intersection Analysis Scenarios 40
8.3 Intersection Thresholds and Impact Criteria 40
9.0 TRAFFIC ANALYSIS 42
9.1 Existing (2016) Conditions 42
9.2 Existing (2016) With Project Conditions 42
9.3 Future (2018) Without Project Conditions 42
9.4 Future (2018) With Project Conditions 43
9.5 Alley Segment Analysis 43
10.0 CONGESTION MANAGEMENT PROGRAM TRAFFIC IMPACT ASSESSMENT 45
10.1 Intersections 45
10.2 Freeways 45
10.3 Transit Impact Review 45
11.0 MITIGATION MEASURES 47
12.0 SUMMARY AND CONCLUSIONS 48

APPENDICES

A. Project Parking Operations Plan and Analysis
B. Manual and Automatic 24-Hour Machine Traffic Count Data
C. ICU/HCM Data Worksheets: Weekday Midday and PM Peak Hours

LIST OF FIGURES

Figure 1-1 - Project Site Vicinity and Study Intersection Locations 2
Figure 2-1 - Project Site Plan 5
Figure 4-1 – Existing Transit Service 13
Figure 4-2 – Existing (2016) Traffic Volumes – Midday Peak Hour 14
Figure 4-3 – Existing (2016) Traffic Volumes – PM Peak Hour 15
Figure 5-1 – Project Trip Assignment Inbound Percentages 23
Figure 5-2 – Project Trip Assignment Outbound Percentages 23
Figure 5-3 – Project Traffic Volumes – Weekday Midday Peak Hour 24
Figure 5-4 – Project Traffic Volumes – Weekday PM Peak Hour 25
Figure 5-5 – Project Traffic Volumes – Weekday PM Peak Hour of Generator 26
Figure 5-6 – Project Traffic Volumes – Saturday Peak Hour of Generator 27
Figure 6-1 – Existing (2016) With Project Traffic Volumes – Midday Peak Hour 29
Figure 6-2 – Existing (2016) With Project Traffic Volumes – PM Peak Hour 30
Figure 7-1 – Related Projects Location Map 33
Figure 7-2 – Related Projects Traffic Volumes – Midday Peak Hour 34
Figure 7-3 – Related Projects Traffic Volumes – PM Peak Hour 35
Figure 7-4 – Future (2018) Traffic Volumes, Without Project – Midday Peak Hour 36
Figure 7-5 – Future (2018) Traffic Volumes, Without Project – PM Peak Hour 37
Figure 7-6 – Future (2018) Traffic Volumes, With Project – Midday Peak Hour 38
Figure 7-7 – Future (2018) Traffic Volumes, With Project – PM Peak Hour 39

LIST OF TABLES

Table 4-1: Existing Area Transit 12
Table 4-2: Level of Service Criteria – ICU Values 17
Table 4-3: Level of Service Criteria – Unsignalized Intersection Delay 17
Table 4-4: Level Of Service (LOS) Analysis Summary - Existing (2016) Traffic Conditions 18
Table 5-1: Project Trip Generation Rates 19
Table 5-2: Project Trip Generation 20
Table 5-3: Project Regional Trip Distribution Percentages 20
Table 7-1: Related Project Descriptions and Trip Generations 32
Table 8-1: City of Beverly Hills Criteria for Significant Traffic Impact – Signalized Intersection 40
Table 8-2: City of Beverly Hills Criteria for Significant Traffic Impact – Unsignalized Intersection 41
Table 9-1: Level of Service (LOS) Analysis Summary - Existing (2016) and Future (2018) Traffic Conditions, Without and With Project 42
Table 9-2: One-Way Southbound Alley Segment Analysis 43

1.0 INTRODUCTION

This traffic analysis has been prepared to identify and evaluate the potential traffic and parking impacts of the proposed Rivea restaurant project (the "Project"), located at 250-260 N. Canon Drive Boulevard in the City of Beverly Hills, California. The Project site is situated on the east side of Canon Drive between Dayton Way to the north and Clifton Way to the south, with a one-way southbound alley bounding the site on the east. The Project site includes the existing 15,683 square-foot Hilton & Hyland real estate office building at 250 N. Canon Drive. Commercial uses are to the north, south, east and west, along with a residential/retail mixed-use building east of the site and along the east side of the one-way southbound alley. The Project site and general vicinity are shown in Figure 1-1.

The traffic analysis follows the City of Beverly Hills traffic study guidelines and is consistent with traffic impact assessment guidelines in the *2010 Congestion Management Program for Los Angeles County* (the "CMP"). This traffic analysis evaluates potential Project-related impacts at four study intersections in the vicinity of the Project site, and also on the one-way southbound alley next to the site. The study locations were determined in consultation with the City of Beverly Hills Senior Transportation Engineer (the "City STE"). The Intersection Capacity Utilization (ICU) methodology was used to determine Volume-to-Capacity (V/C) ratios and Levels of Service (LOS) for the signalized study intersections. The Highway Capacity Manual (HCM) methodology was used to calculate the LOS of unsignalized, all-way stop controlled study intersections. In addition, a review was conducted of Los Angeles County Metropolitan Transportation Authority intersection and freeway monitoring stations to determine if a Congestion Management Program transportation impact assessment analysis is required for the Project.

This study presents and analyzes the following:

- Existing traffic volumes;
- Forecasted existing with Project traffic volumes;
- Forecasted future traffic volumes with related projects and regional growth;
- Forecasted future with Project traffic volumes;
- Project-related traffic impacts; and
- Feasible mitigation measures, where necessary.

1.1 Study Area

Based on direction from the City STE, four study intersections and the adjacent one-way southbound alley have been identified for evaluation. These study locations provide local access for the Project site and define the extent of the boundaries for traffic impact analysis.

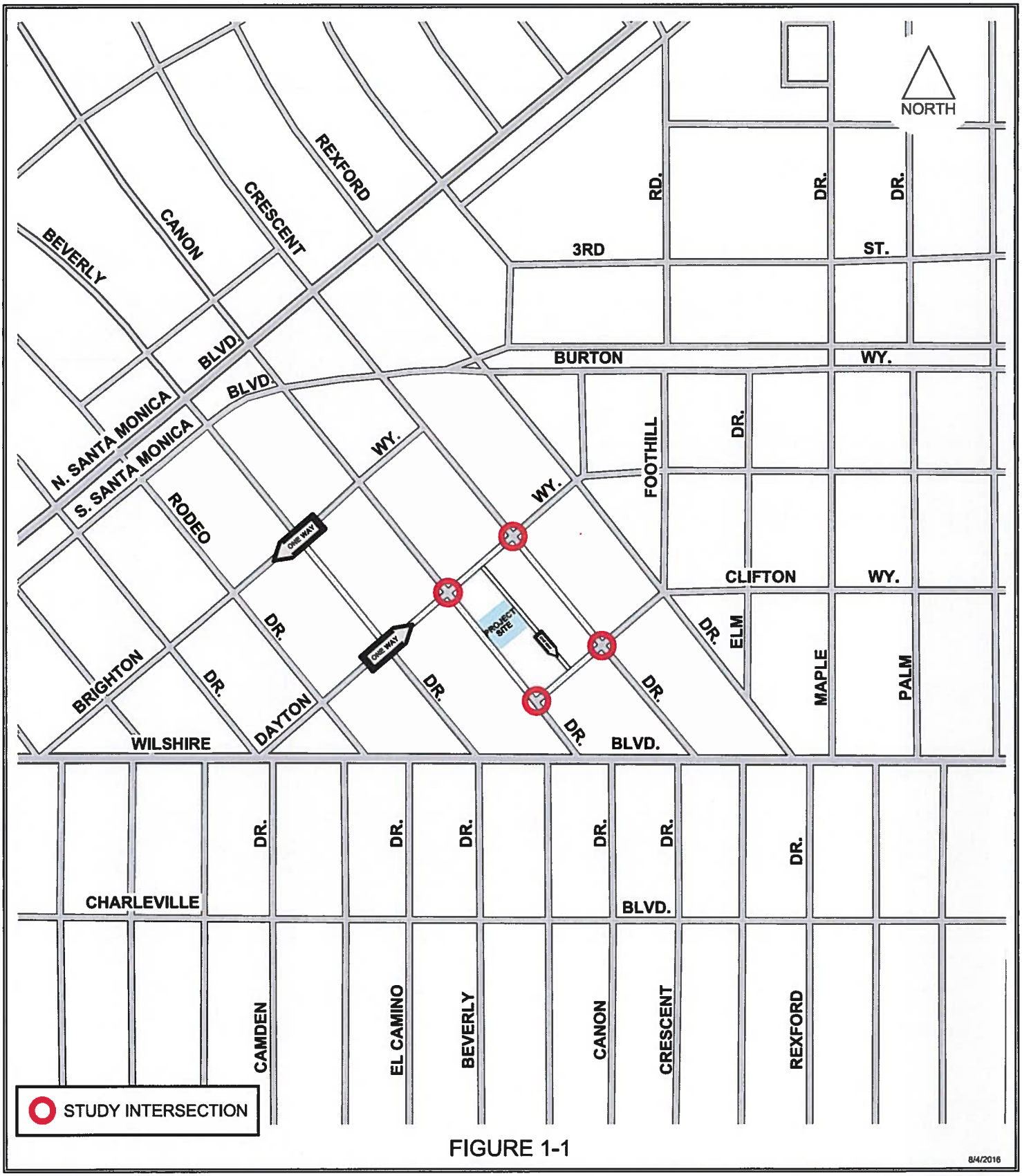

FIGURE 1-1

8/4/2016

FN: CanonDr(248)BevHills/STUDY-INTS

PROJECT SITE VICINITY AND
STUDY INTERSECTION LOCATIONS

CRAIN & ASSOCIATES
Transportation Planning
Traffic Engineering
300 Corporate Pointe, Suite 470
Culver City, California 90230
PH (310) 473 6508 F (310) 444 9771
www.crainandassociates.com

Further discussion of the existing street system and study area is provided in Section 4.0.

The general location of the Project site in relation to the study locations and surrounding street system is presented in Figure 1-1. The traffic analysis study area is generally comprised of those intersections having the greatest potential to experience significant traffic impacts due to the Project, as determined in consultation with the City STE. The study intersections are listed below and define the extent of the boundaries for this traffic impact assessment.

1. Canon Drive/Dayton Way
2. Crescent Drive/Dayton Way
3. Canon Drive/Clifton Way *(all-way stop controlled)*
4. Crescent Drive/Clifton Way *(all-way stop controlled)*

In addition to the above four study intersections, the one-way southbound alley along the east side of the Project site was also identified for operational analysis by the City STE.

The calculated V/C ratios and delays (seconds) and LOS for the study intersections were used to evaluate the potential traffic-related impacts associated with area growth, cumulative projects, and the Project.

2.0 PROJECT LOCATION AND DESCRIPTION

2.1 Project Site Location

The Project site is located at 250-260 N. Canon Drive in the City of Beverly Hills. It is a rectangular site that is bounded by a commercial building on the north (Zein Obagi building at 270 N. Canon Drive), a commercial building on the south (Mastro's Steakhouse restaurant at 246 N. Canon Drive), Canon Drive on the west, and a one-way southbound alley on the east. Along the east side of the alley is a residential/retail mixed-use building. The Project site includes the 15,683 square-foot Hilton & Hyland office building at 250 N. Canon Drive and a surface parking lot. The nearest cross streets are Dayton Way to the north and Clifton Way to the south. The site is within the City's Business Triangle, which is bounded by North Santa Monica Boulevard, Wilshire Boulevard, and Crescent Drive. The site is situated within walking distance of office, retail, restaurant, and other commercial businesses located along the Wilshire Boulevard and Santa Monica Boulevard corridors and within the Business Triangle.

2.2 Existing Project Site Use

The Project site contains the aforementioned Hilton & Hyland office building at 250 N. Canon Drive and adjacent surface parking lot that extends from Canon Drive to the one-way southbound alley to the east. The lot currently provides 22 parking spaces for the Hilton & Hyland office building. The Hilton & Hyland office building also has six parking spaces immediately east of (behind) the building and adjacent to the one-way southbound alley and, therefore, maintains a total parking supply of 28 parking spaces.

2.3 Proposed Project Description

The Project includes a new three-level building for a high-end, quality restaurant containing approximately 3,240 square feet of indoor/outdoor dining and bar area and 9,053 square feet of circulation, kitchen, back of house, and restroom area. The Project total floor area is approximately 12,040 square feet (excluding shafts and elevator lobby area). The restaurant will have up to approximately 216 seats. The restaurant would be situated at the location of the existing surface parking lot, immediately south of the Hilton & Hyland office building and north of Mastro's Steakhouse restaurant. The proposed hours of operation are 11:00 AM to 2:30 PM, Monday through Sunday; 5:00 PM to 11:00 PM, Sunday through Thursday; and 5:00 PM to 1:00 AM, Friday and Saturday. It is estimated that the peak number of employees will be 29 persons during the lunch period and 32 persons during the dinner period. It is anticipated that the Project will be completed and operational by 2018. The Project site plan is illustrated in Figure 2-1.

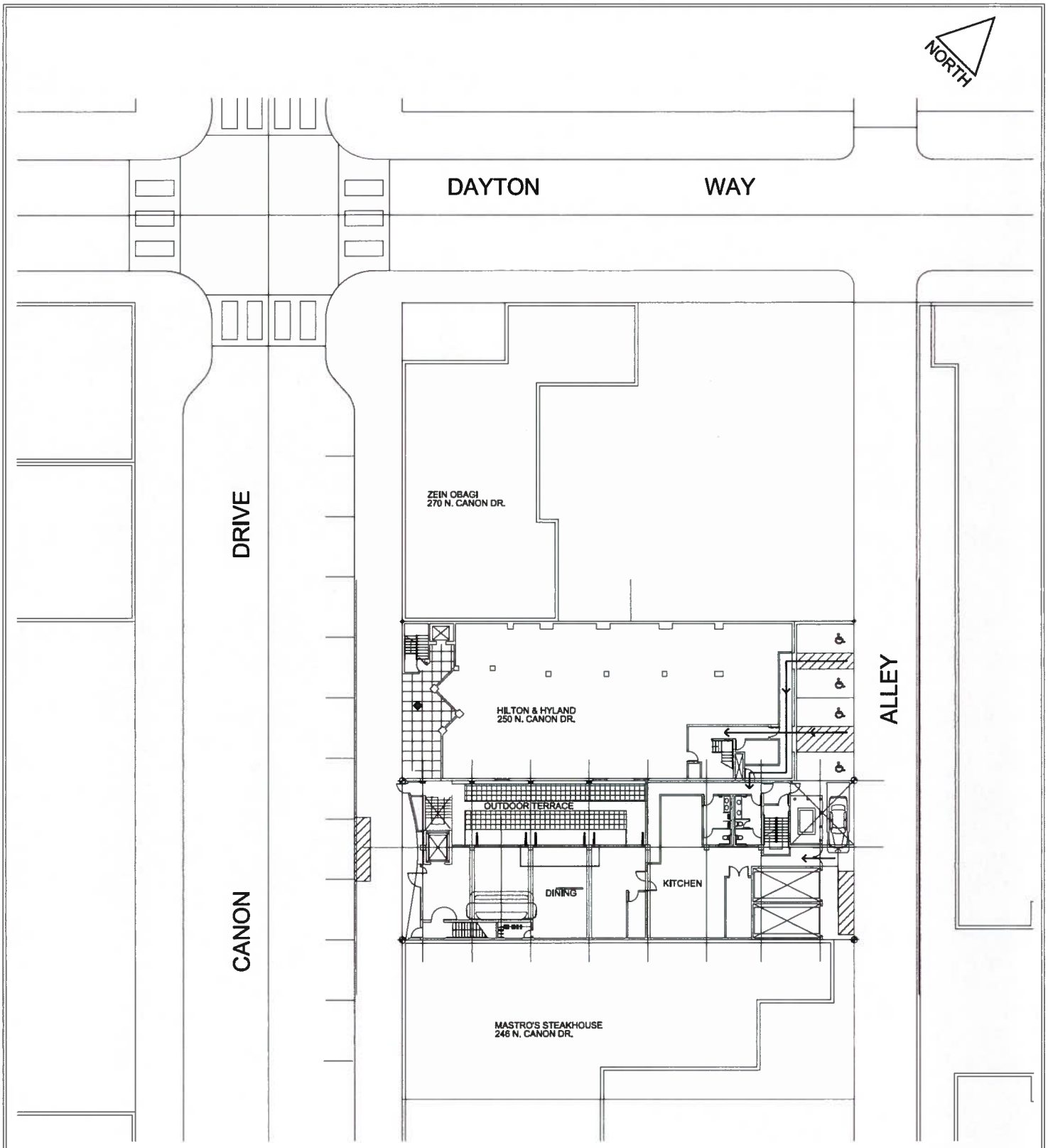

FIGURE 2-1

9/12/2016

FN: CANONDR (248) BEV HILLS\SITEPLAN20160912

PROJECT SITE PLAN

CRAIN & ASSOCIATES
Transportation Planning
Traffic Engineering
300 Corporate Pointe, Suite 470
Culver City, California 90230
PH (310) 473 6508 F (310) 444 9771
www.crainandassociates.com

The code-required parking for the Project (existing Hilton & Hyland office building and proposed quality restaurant) will be provided via the four spaces behind the Hilton & Hyland office building and adjacent to the one-way southbound alley and within an on-site, subterranean garage that will only be directly accessed via the alley. The garage will utilize an elevator lift system for the actual parking, storage, and retrieval of vehicles. Through a lease agreement with the 270 N. Canon Drive property, a portion of the nearby parking lot on the southwest corner of Dayton Way and the one-way southbound alley will also be available to the Project after 5:30 PM on weekdays and all-day on weekends. This lot will be used for transitional and supplemental parking for the Project. Further, if necessary for special events, the Project will rent parking spaces in either the Crescent Drive North public parking lot (333 N. Crescent Drive) or the Whole Foods Market parking lot (239 N. Crescent Drive). The delivery and return of customer vehicles to and from these parking facilities will be handled entirely by valet attendants. Customers and others will not be allowed to park or retrieve vehicles themselves.

2.4 Project Parking

2.4.1 Code Parking Requirement

Per Section 10-3-2730 of the City of Beverly Hills Municipal Code, the parking requirements for restaurants and their ancillary facilities, such as the Project, are summarized below. It should be noted that the code parking requirements for any development project is ultimately determined by the Lead Agency. It is anticipated that the Project will provide the required parking as determined by the City through the entitlement and approval process, prior to the issuance of a building permit for the Project.

- For the existing Hilton & Hyland office building, the existing parking supply of 28 parking spaces must be maintained. However, per Section 10-3-2730F(1), up to 50 percent of the parking facilities of a use considered to be primarily a daytime use may be used to satisfy the parking requirements for a use considered to be primarily a nighttime use;
- For eating and bar facilities, 1 space per 45 square feet of dining and bar floor area for the first 9,000 square feet and 1 space per 65 square feet of dining and bar floor area in excess of 9,000 square feet. However, 25 percent of the spaces required to be provided for commercial uses not otherwise specified in Section 10-3-2730 may be applied toward the dining and bar floor area parking requirement;
- For commercial uses not otherwise specified in Section 10-3-2730, 1 space per 350 square feet of floor.

Based on the following calculations, the code required parking for the Project is 106 spaces:

- Existing Hilton & Hyland parking requirement = 28 spaces

- 3,240 square feet (dining/bar areas) x 1 space/45 square feet = 72 spaces
- 9,053 square feet (circulation, kitchen, back of house, restrooms) x 1 space/350 square feet = 26 spaces
- Commercial use deduction: 25 percent x 26 spaces = -6 spaces
- Office (daytime use) deduction: 50 percent x 28 spaces = -14 spaces

106 spaces

2.4.2 Project Parking Supply

It is estimated that the Project's on-site garage would be able to park up to 102 vehicles on three subterranean levels. Each level will have elevator parking that allows 28 vehicles to be parked on lifts, along with capacity to store six additional vehicles through valet assistance. The six existing parking spaces located behind the Hilton & Hyland office building will be converted into four Americans with Disabilities Act (ADA) parking spaces and two access aisles. The Project will also lease a portion of the nearby Zein Obagi parking lot (270 N. Canon Drive) on the southwest corner of Dayton Way and the one-way southbound alley, which will make available 13 spaces after 5:30 PM on weekdays and all-day on weekends. Further, if necessary for planned special events, the Project will rent up to a total of 38 spaces in the Zein Obagi parking lot or additional spaces at either the Crescent Drive North public parking lot (333 N. Crescent Drive) or the Whole Foods Market parking lot (239 N. Crescent Drive). Combined, these parking areas will supply approximately 106 spaces during the weekday lunch period and 119 spaces during the weekday dinner period and on weekends. These parking supplies meet or exceed the code parking requirement of 106 spaces calculated above. The Project parking operations plan and analysis is more fully described in Appendix A.

Employees and visitors of the Hilton & Hyland office building, as well as employees of the proposed quality restaurant, will park using the abovementioned Project parking facilities serviced by valet staff. These Project users will arrive by driving down the one-way southbound alley to the rear of the Hilton & Hyland office building, where valet attendants will then drive their vehicles and park them within the Project's subterranean garage. Provision of parking for the Hilton & Hyland office building staff would only be during the normal weekday business hours of approximately 8:00 AM to 5:00 PM. During the weekday morning arrival of office employees, restaurant parking demand will be negligible, which will help minimize vehicle queuing in the alley and maintain one-way southbound alley traffic flow adjacent to the Project site. Employees and visitors leaving the 250 N. Canon Drive building will have their vehicles retrieved and brought out to the alley by valet attendants. They will first make a call to valet staff in order to have their car retrieved. They will then be notified once the car is being brought to the alley via elevator, at which point they will exit the 250 N. Canon Drive building and depart southbound in their vehicle on the alley to Clifton Way.

It is anticipated that valet operations will be active between approximately 8:00 AM and the close of the restaurant on weekdays, and between approximately 10:00 AM and the close of the restaurant on weekends. It should be noted that bicycle parking will be provided for Project employees and is tentatively proposed to be located on the first level of subterranean parking within the on-site garage.

3.0 PROJECT SITE ACCESS AND CIRCULATION

Descriptions of the existing and proposed Project site access and circulation schemes are described below.

3.1 Existing Project Site Access

Direct vehicular access to the Project site surface parking lot is presently provided via one inbound driveway on Canon Drive and one outbound driveway on the rear one-way southbound alley. Both driveways have controlled gates. The existing six parking spaces located behind the Hilton & Hyland office building are accessed directly from the one-way southbound alley.

3.2 Proposed Project Site Access

The existing Project site driveway on Canon Drive will be closed and the Project will not have a driveway on Canon Drive. As described in Appendix A, all customer vehicles will first access the Project at curbside on Canon Drive in front of the Project site. Valet attendants will then drive those vehicles northbound on Canon Drive, eastbound on Dayton Way, and southbound on the one-way alley to access the on-site garage, the parking spaces behind the Hilton & Hyland office building, or the leased spaces in the adjacent 270 N. Canon Drive parking lot. For the return trip, the valet attendants will drive the vehicles from the garage/spaces/adjacent lot, traveling southbound on the alley, westbound on Clifton Way, and northbound on Canon Drive to curbside in front of the building. If necessary during unusually busy times or for special events, the Project have the option of renting up to all 38 spaces within the adjacent 270 N. Canon Drive parking lot or renting additional spaces in either the Crescent Drive North public parking lot (333 N. Crescent Drive) or the Whole Foods Market parking lot (239 N. Crescent Drive).

4.0 EXISTING CONDITIONS

4.1 Existing Street System

The local network of streets serving the Project study area includes Canon Drive, Dayton Way, Crescent Drive, and Clifton Way. These roadways provide access to the Business Triangle. Two of the four study intersections selected for analysis are controlled by traffic signals and the other two are controlled by all-way stop signs.

4.1.1 Roadway Classifications

The City of Beverly Hills utilizes three functional street types. The roadway categories are summarized as follows:

- *Arterial* roadways serve major activity centers and carry regional through traffic along with a high proportion of urban trips. They are typically four-lane (and sometimes six-lane) roadways and serve both local and regional through-traffic.
- *Collector* roadways provide access and traffic circulation within residential, commercial, and industrial areas. Collector roadways connect local streets to arterials and are typically designed with two lanes that may accommodate on-street parking.
- *Local* roadways distribute traffic within a neighborhood, or similar adjacent land uses, and are not intended for use for through traffic.

4.1.2 Roadway Descriptions

Brief descriptions of the key roadways in the Project study area are provided below.

Dayton Way is an east-west Local Street located north of the Project site. Dayton Way operates one-way eastbound with two travel lanes. On-street parking is generally available along both sides of the street. East of Crescent Drive, Dayton Way is a two-way roadway with one travel lane in each direction and on-street parking along both sides.

Canon Drive is a north-south Local Street that forms the western boundary of the Project site. Canon Drive has two travel lanes in each direction and on-street parking along both sides of the roadway.

Clifton Way is an east-west Local Street located south of the Project site. It provides one travel lane with on-street parking in each direction.

Crescent Drive, a north-south Local Street one block east of Canon Drive, has two travel lanes, on-street parking, and bike sharrows in both directions.

The *one-way southbound alley* forms the eastern boundary of the Project site.

4.2 Existing Public Bus Transit Services

Public bus transit service within the Project study area is currently provided by the Los Angeles County Metropolitan Transportation Authority ("Metro") and Antelope Valley Transit Authority (AVTA). A summary of the existing transit service within the Project vicinity, including the transit route, description, nearby stops, and peak-hour headways is presented in Table 4-1 and illustrated in Figure 4-1.

4.3 Existing Pedestrian and Bicycle Facilities

All key roadways in the Project vicinity have sidewalks. Crosswalks are provided at all of the study intersections. The traffic signal at the study intersection of Canon Drive/Dayton Way operates with a dedicated phase for pedestrians to cross in any direction. As previously noted, Crescent Drive is a designated bicycle facility, with bike sharrow pavement markings.

4.4 Existing Year 2016 Traffic Volumes

4.4.1 Intersection Traffic Counts

Vehicular turning movement traffic counts were conducted at each of the four study intersections during the weekday Midday and PM peak periods. The intersection locations and count periods were determined in consultation with the City STE. Due to the operational characteristics of the Project, the weekday Midday peak period was recommended for analysis by the City STE instead of the typical AM peak period. The manual counts were conducted at the study intersections on April 13, 2016 from 11:30 AM to 2:00 PM to determine the weekday Midday peak hour, and from 4:30 PM to 8:00 PM to determine the weekday PM peak hour. The peak-hour volumes for each study intersection were determined on the basis of the combined four highest consecutive 15-minute traffic counts for all vehicular movements entering the intersection.

The existing weekday Midday and PM peak-hour traffic volumes at the four study intersections are shown in Figures 4-2 and 4-3, respectively. Summary data worksheets of the manual traffic counts of the study intersections are contained in Appendix B.

Table 4-1: Existing Area Transit

TRANSIT AGENCY	LINE #	DESCRIPTION	DIRECTION	NEARBY STOP	DISTANCE TO STOP (MI.)	APPROX. HEADWAYS (MIN.)		
						MIDDAY PEAK	PM PEAK	WEEKEND
Antelope Valley Transit Authority	AV786	Commuter bus line that operates north-south service between Lancaster/Palmdale and Century City/West LA via Santa Monica Bl., Wilshire Bl., and La Brea Av.	North/South	Wilshire Bl./Canon Dr. & Wilshire Bl./Crescent Dr.	0.19 -0.25 mi	-	20-40 min	-
Metro	4	Local bus lines that operates east-west service between Los Angeles and Santa Monica via Santa Monica Bl. and Sunset Bl. Owl late night service is provided.	East/West	N. Santa Monica Bl./ Canon Dr.	0.34 mi	15 min	9-12 min	10-30 min
Metro	14	Local bus lines that operates east-west service between Downtown LA and Beverly Hills via Beverly Bl., Santa Monica Bl., and Canon Dr. Owl late night service is provided.	East/West	Canon Dr./ Dayton Wy. & Canon Dr. / Clifton Wy.	0.06 mi	15 min	5-8 min	15-60 min
Metro	16/316	Local/Limited bus lines that operates east west service between Downtown LA and Century City via 3rd St., Burton Wy., Santa Monica Bl.	East/West	S. Santa Monica Bl./ Canon Dr. & S. Santa Monica Bl./ Crescent Dr.	0.29-0.34 mi	8-10 min	3-20 min	6-30 min
Metro	20	Local bus line that operates east-west service between Downtown LA and Santa Monica via Wilshire Bl. Owl late night service is provided.	East/West	Wilshire Bl./Crescent Dr. & Wilshire Bl./Canon Dr.	0.19 -0.25 mi	11-12 min	6-15 min	15-30 min
Metro	704	Rapid bus line that operates east-west service between the Commerce and Santa Monica via Santa Monica Bl. and Sunset Bl.	East/West	N. Santa Monica Bl./ Canon Dr. & N. Santa Monica Bl./ Crescent Dr.	0.34-0.50 mi	15 min	10-15 min	20-30 min
Metro	720	Rapid bus line that operates east-west service between the Commerce and Santa Monica via Wilshire Bl.	East/West	Wilshire Bl./Beverly Dr.	0.27 mi	7-8 min	2-10 min	6-20 min

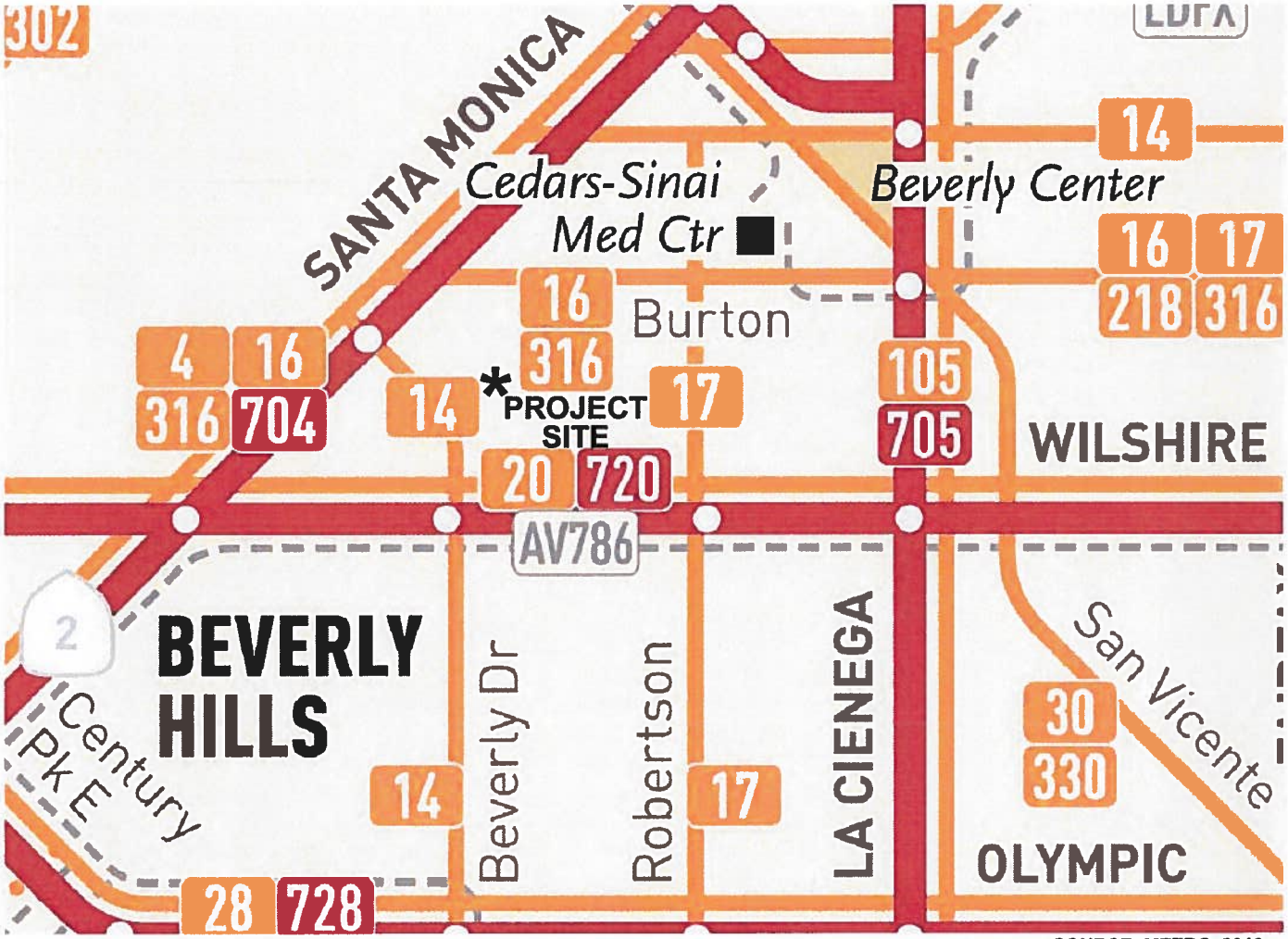

SOURCE: METRO, 2016

FIGURE 4-1

8/4/2016

FN: CANON DR (248) BEV HILLS\TRANSIT

EXISTING TRANSIT SERVICE

CRAIN & ASSOCIATES
Transportation Planning
Traffic Engineering
300 Corporate Pointe, Suite 470
Culver City, California 90230
PH (310) 473 6508 F (310) 444 9771
www.crainandassociates.com

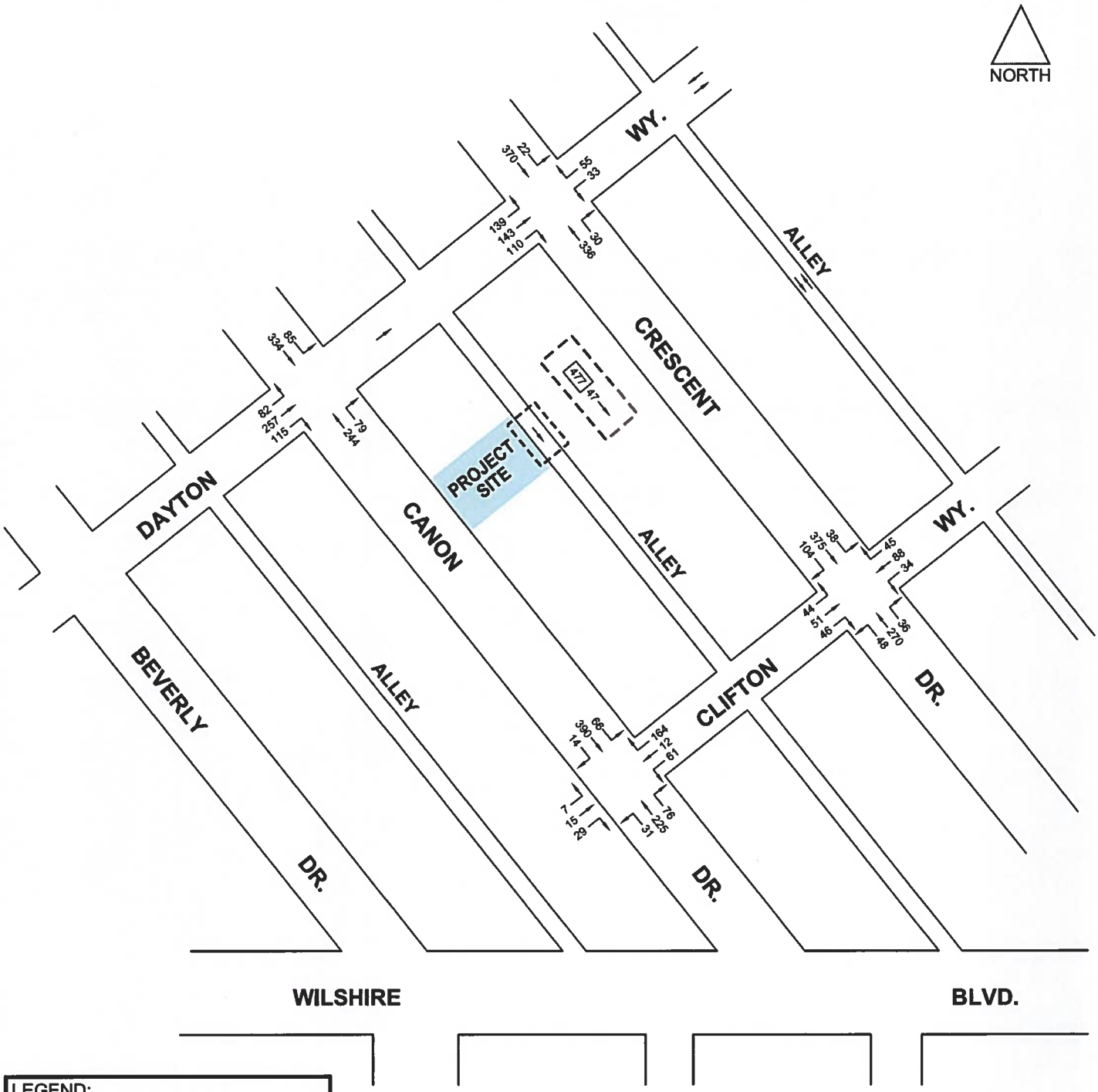

LEGEND:
XX MIDDAY PEAK HOUR VOLUME
[XX] DAILY VOLUME

FIGURE 4-2

8/4/2016

CanonDr(248)BevHills\MD2016

EXISTING (2016) TRAFFIC VOLUMES
MIDDAY PEAK HOUR

CRAIN & ASSOCIATES
Transportation Planning
Traffic Engineering
300 Corporate Pointe, Suite 470
Culver City, California 90230
PH (310) 473 6508 F (310) 444 9771
www.crainandassociates.com

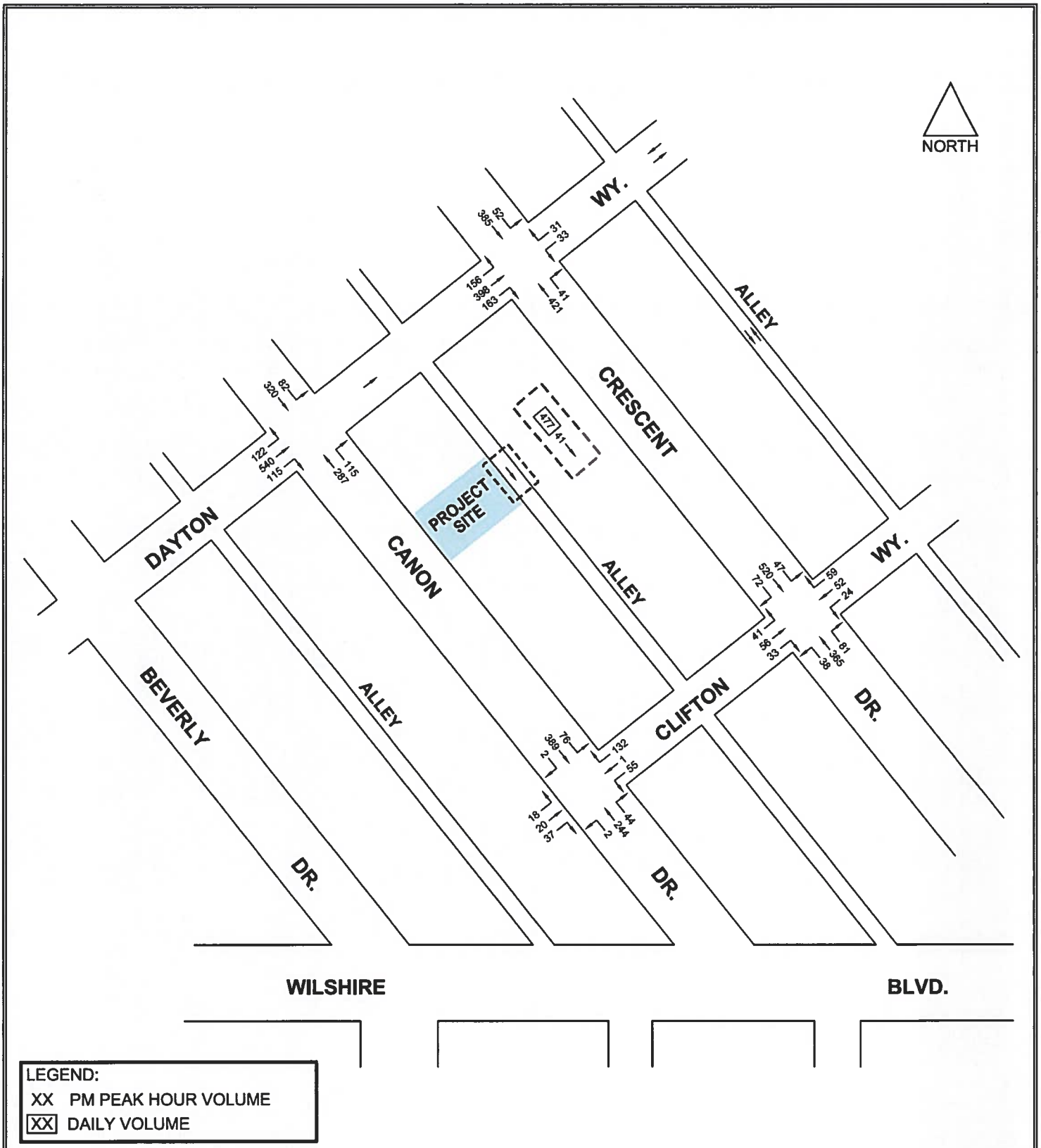

FIGURE 4-3

8/4/2016

CanonDr(248)BevHills\PM2016

EXISTING (2016) TRAFFIC VOLUMES
PM PEAK HOUR

CRAIN & ASSOCIATES
Transportation Planning
Traffic Engineering
300 Corporate Pointe, Suite 470
Culver City, California 90230
PH (310) 473 6508 F (310) 444 9771
www.crainandassociates.com

4.4.2 Alley Segment Daily Traffic Count

A 24-hour machine traffic count of the one-way southbound alley between Dayton Way and Clifton Way was conducted concurrently with the intersection traffic counts on April 13, 2016. A Midday and PM peak-period turning movement count at the intersection of alley and Dayton Way was also conducted on the same day. The 24-hour machine count and peak-period turning movement count data sheets are contained in Appendix B.

4.5 Existing Intersection Operating Conditions

Existing Midday and PM peak hour operating conditions for the four study intersections were evaluated using the Intersection Capacity Utilization (ICU) and Highway Capacity Manual (HCM) methodologies in accordance with City of Beverly Hills traffic study requirements.

4.5.1 City of Beverly Hills Intersection Analysis Methodologies

The ICU methodology was applied to the signalized study intersections, as this is the City's adopted methodology. This methodology determines critical lane traffic volumes, volume-to-capacity (V/C) ratios, and levels of service (LOS). The City recommends a capacity of 1,600 vehicles per hour per lane for left-turn, through, and right-turn lanes; a capacity of 2,880 vehicles per hour for dual left-turn lanes; and the addition of a clearance value of 0.100 for each intersection calculation. However, for the intersection of Canon Drive/Dayton Way, it is recommended that the clearance value be increased to 0.333 in order to account for the traffic signal's all-pedestrian phase. Based on the resulting ICU value, the intersection LOS can be determined using the criteria in Table 4-2.

The HCM methodology was applied to the two unsignalized study intersections, which operate with all-way stop control. The HCM methodology determines intersection LOS based on overall or control delay in seconds that the average motorist will experience. The intersection LOS can be determined according to the delay value criteria in Table 4-3.

The ICU and HCM data worksheets for the four study intersections are provided in Appendix C.

Table 4-2: Level of Service Criteria – ICU Values

Level of Service	Description of Operating Characteristics	Range of V/C Ratios
A	Excellent. No vehicle waits longer than one red light.	0.000 - 0.600
B	Very Good. An occasional approach phase is fully utilized; many drivers begin to feel somewhat restricted within groups of vehicles.	0.601 - 0.700
C	Good. Occasionally, drivers may have to wait through more than one red light; backups may develop behind turning vehicles.	0.701 - 0.800
D	Fair. Delays may be substantial during portions of the rush hour, but enough lower volume periods occur to permit clearing of developing lines, preventing excessive backups.	0.801 - 0.900
E	Poor. Represents the most vehicles that intersection approaches can accommodate; may be long lines of waiting vehicles through several signal cycles.	0.901 - 1.000
F	Failure. Backups from nearby intersections or on cross streets may restrict or prevent movement of vehicles out of the intersection approaches. Tremendous delays with continuously increasing queue lengths.	> 1.000

Table 4-3: Level of Service Criteria – Unsignalized Intersection Delay (Seconds/Vehicles)

Level Of Service	Overall/Control Delay (Seconds/Vehicle)
A	0 – 10
B	> 10 - 15
C	> 15 - 25
D	> 25 - 35
E	> 35 – 50
F	> 50

4.5.2 Existing Level of Service Results

The existing Midday and PM peak-hour service level calculations for the four study intersections are summarized in Table 4-4. The analysis indicates that all four study intersections are currently operating at good levels of service (i.e., LOS C or better during the weekday Midday and PM peak hours).

Table 4-4: Level of Service (LOS) Analysis Summary
Existing (2016) Traffic Conditions

No.	Intersection	Peak Hour	Existing V/C / Delay	Existing LOS
1	Canon Drive/ Dayton Way	Midday	0.639	B
		PM	0.773	C
2	Crescent Drive/ Dayton Way	Midday	0.391	A
		PM	0.616	B
3	Canon Drive/ Clifton Way	Midday	13.0	B
		PM	11.4	B
4	Crescent Drive/ Clifton Way	Midday	12.2	B
		PM	14.1	B

5.0 TRAFFIC FORECASTING METHODOLOGY

The following section describes the traffic forecasting methodology used to determine the Project trip generation, the geographic distribution of the Project trips, and the Project trips that were assigned to specific roadways and study intersections.

5.1 Project Traffic Generation

The Project trip generation was calculated using trip generation rates from the current Institute of Transportation Engineers (ITE) Trip Generation, 9th Edition manual. As the existing Hilton & Hyland office building already generates trips and will remain on the Project site, only the trip generation for the proposed restaurant was calculated. Given the high-end nature of the restaurant proposed for the Project, it was agreed with the City STE that it would be appropriate to categorize the Project as a "Quality Restaurant." The applicable ITE trip generation rates are shown below in Table 5-1.

Table 5-1: Project Trip Generation Rates

Quality Restaurant (ITE Land Use Code 931)

Weekday Daily:	T	=	2.86(S)	
Weekday Midday Peak Hour:*	T	=	0.16(S);	70% I/B, 30% O/B
Weekday PM Peak Hour:	T	=	0.26(S);	67% I/B, 33% O/B
Weekday PM Peak Hour of Generator:	T	=	0.30(S);	59% I/B, 41% O/B
Saturday Peak Hour of Generator:	T	=	0.33(S);	59% I/B, 41% O/B

** Midday Peak Hour trip generation rates based off of the AM Peak Hour of Generator.*

Where: T = Trip ends; S = Seats; I/B = Inbound; O/B = Outbound

As recommended by the City STE, the AM Peak Hour of Generator trip rate was assumed to estimate the Midday peak-hour trip generation, as ITE does not have an explicit Midday peak-hour trip rate. Applying the above rates, the weekday daily, Midday peak-hour and PM peak-hour trips generated by the Project were determined for use in the impact analysis of the study locations. Project trips generated during the weekday PM Peak Hour of Generator and Saturday Peak Hour of Generator were also calculated for the purposes of analyzing the Project parking operations plan in Appendix A; however, these trips were not analyzed for traffic impacts as they would be generated outside the typical weekday PM commuter peak hour or on the weekend. It should be noted that these rates do not account for significant transit usage or for the use of ridesharing services and, therefore, result in conservative trip generation estimates.

The weekday trip generation calculations were reviewed and approved by the City STE. As shown in Table 5-2, it is estimated that the Project would generate 618 new weekday daily trips, including 35 trips during the Midday peak hour, 56 trips during the PM peak hour, and 65 trips during the PM Peak Hour of the Generator. During the Saturday Peak Hour of the Generator, the Project would generate 71 new trips.

Table 5-2: Project Trip Generation

		Weekday										Saturday		
			AM Peak Hour			PM Peak Hour			PM Peak Hour of Generator			Peak Hour of Generator		
	Size	Daily	I/B	O/B	Total	I/B	O/B	Total	I/B	O/B	Total	I/B	O/B	Total
PROPOSED USE														
Quality Restaurant	216 st	618	25	10	35	38	18	56	38	27	65	42	29	71

Notes:

ITE Trip Generation, 9th Edition trip generation rates applied.
st = Number of seats; I/B = Inbound; O/B = Outbound.

5.2 Project Trip Distribution

Estimation of the regional distribution of Project trips was the next step in the analytical process. This trip distribution considered the following:

- Nature of the Project use;
- Current traffic patterns;
- Characteristics of the surrounding roadway system;
- Location of the Project site and its proximity to freeways and major travel routes;
- Geographic areas from which Project patrons and employees would likely be attracted; and
- Input from the City STE.

Based on these considerations, estimates were made of the overall geographic trip distribution percentages, which are summarized in Table 5-3.

Table 5-3: Project Regional Trip Distribution Percentages

North	35%
South	15%
East	20%
West	30%

5.3 Project Trip Assignment

The estimated Project trip assignment percentages for the streets and intersections expected to be used to access the site were developed from the distribution percentages in Table 5-3. These percentages, inbound and outbound, were also reviewed and approved by the City STE, and are illustrated in Figures 5-1 and 5-2, respectively.

Applying these percentages to the Project trips in Table 5-2, the Project's weekday Midday and PM peak-hour and PM Peak-Hour of the Generator trips were calculated, as presented in Figures 5-3, 5-4, and 5-5, respectively. The Project's Saturday Peak Hour of Generator trips are shown in Figure 5-6.

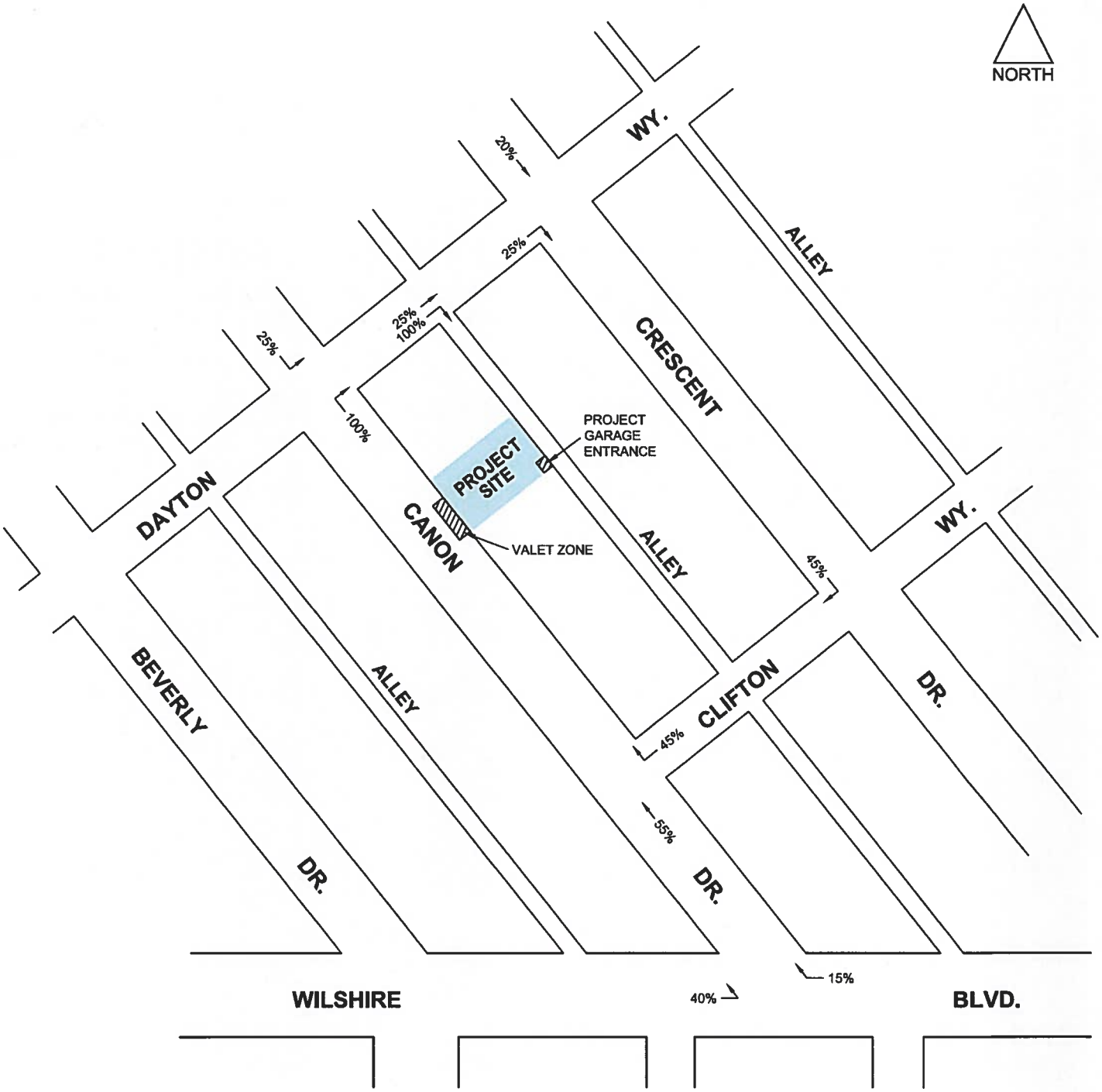

FIGURE 5-1

8/4/2016

FN: CANON DR(248) BEV HILLS\PROJ-DIST(INBOUND)

PROJECT TRIP ASSIGNMENT INBOUND PERCENTAGES
BASED ON VALET PICK-UP AT THE FRONT OF THE RESTAURANT

CRAIN & ASSOCIATES
Transportation Planning
Traffic Engineering
300 Corporate Pointe, Suite 470
Culver City, California 90230
PH (310) 473 6508 F (310) 444 9771
www.crainandassociates.com

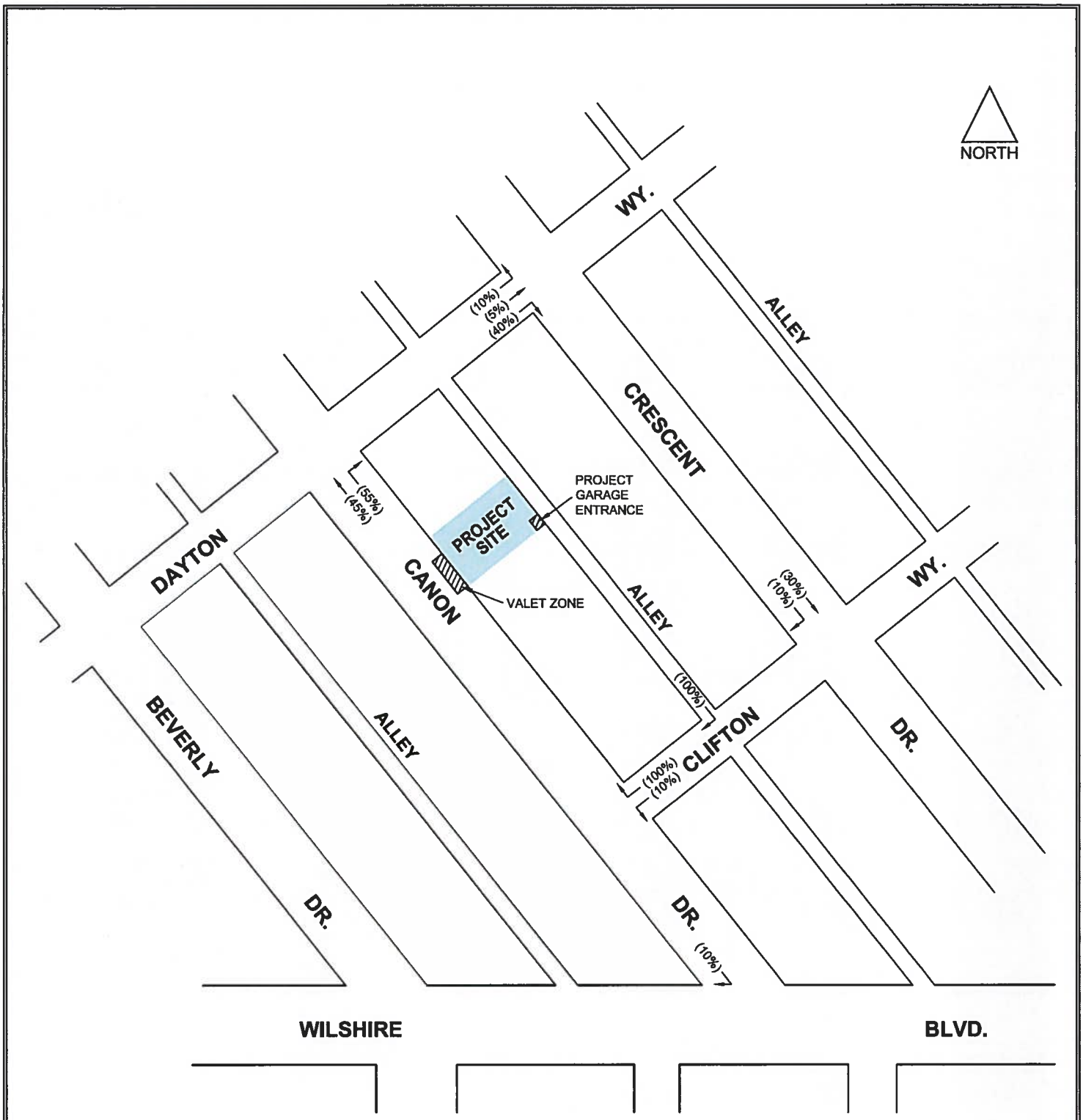

FIGURE 5-2

8/4/2016

FN: CANON DR(248) BEV HILLS\PROJ-DIST(OUTBOUND)

PROJECT TRIP ASSIGNMENT OUTBOUND PERCENTAGES BASED ON VALET DROP-OFF AT THE FRONT OF THE RESTAURANT

CRAIN & ASSOCIATES
Transportation Planning
Traffic Engineering
300 Corporate Pointe, Suite 470
Culver City, California 90230
PH (310) 473 6508 F (310) 444 9771
www.crainandassociates.com

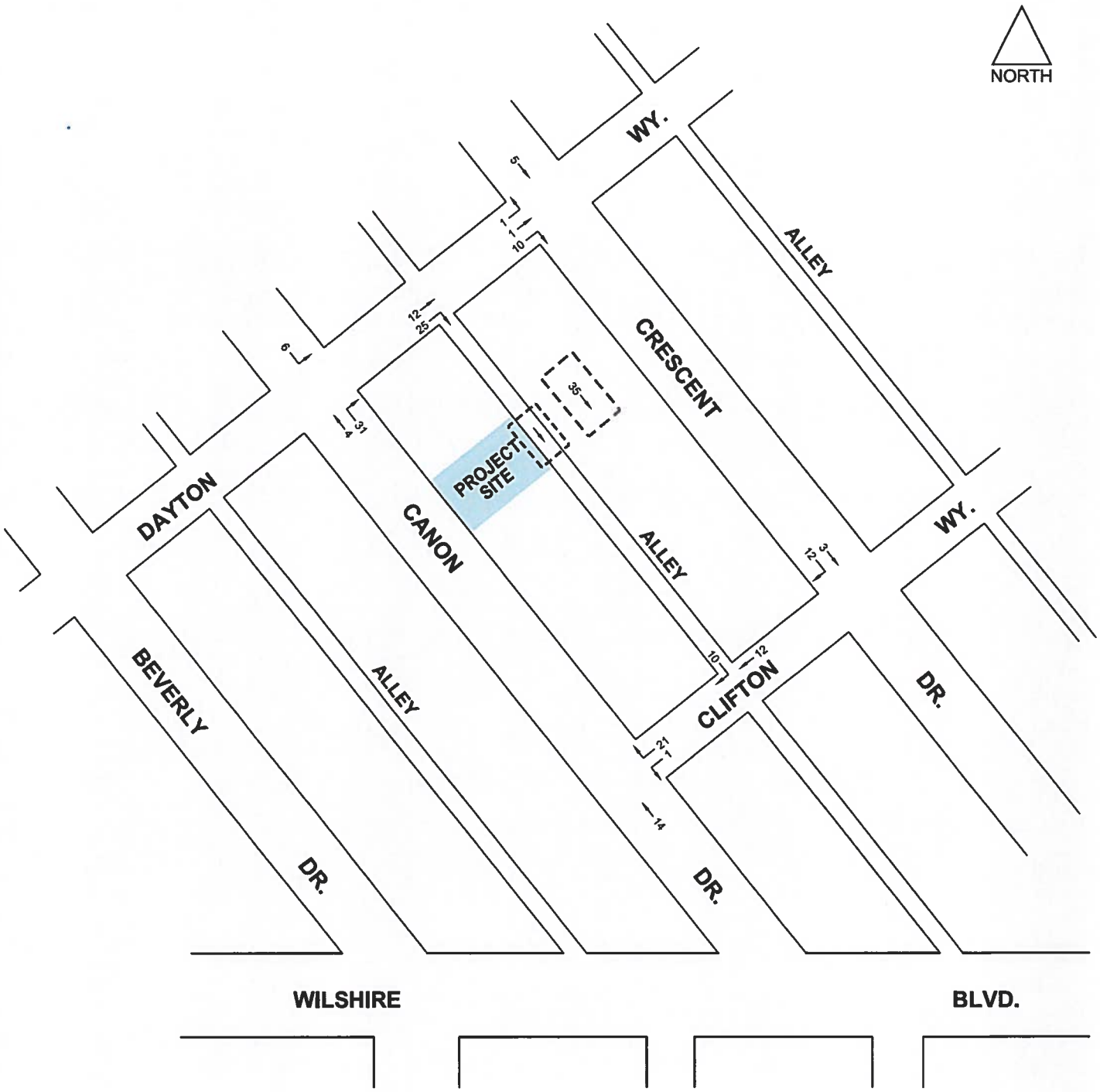

FIGURE 5-3

9/12/2016

CanonDr(248)BevHills\MDPRJVOLS

PROJECT TRAFFIC VOLUMES
WEEKDAY MIDDAY PEAK HOUR

CRAIN & ASSOCIATES
Transportation Planning
Traffic Engineering
300 Corporate Pointe, Suite 470
Culver City, California 90230
PH (310) 473 6508 F (310) 444 9771
www.crainandassociates.com

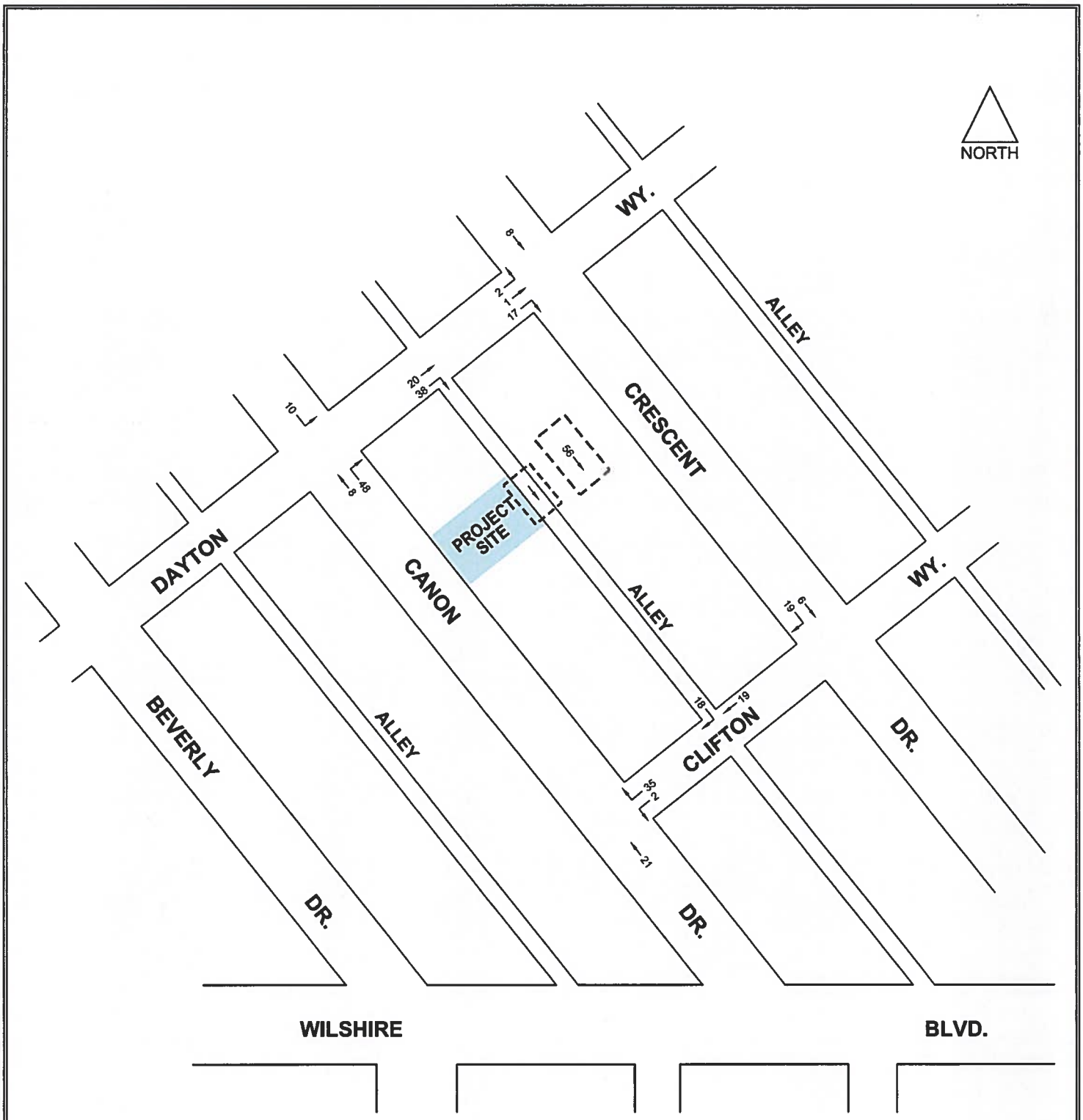

FIGURE 5-4

9/12/2016

CanonDr(248)BevHills\PMPRJVOLS

PROJECT TRAFFIC VOLUMES
WEEKDAY PM PEAK HOUR

CRAIN & ASSOCIATES
Transportation Planning
Traffic Engineering
300 Corporate Pointe, Suite 470
Culver City, California 90230
PH (310) 473 6508 F (310) 444 9771
www.crainandassociates.com

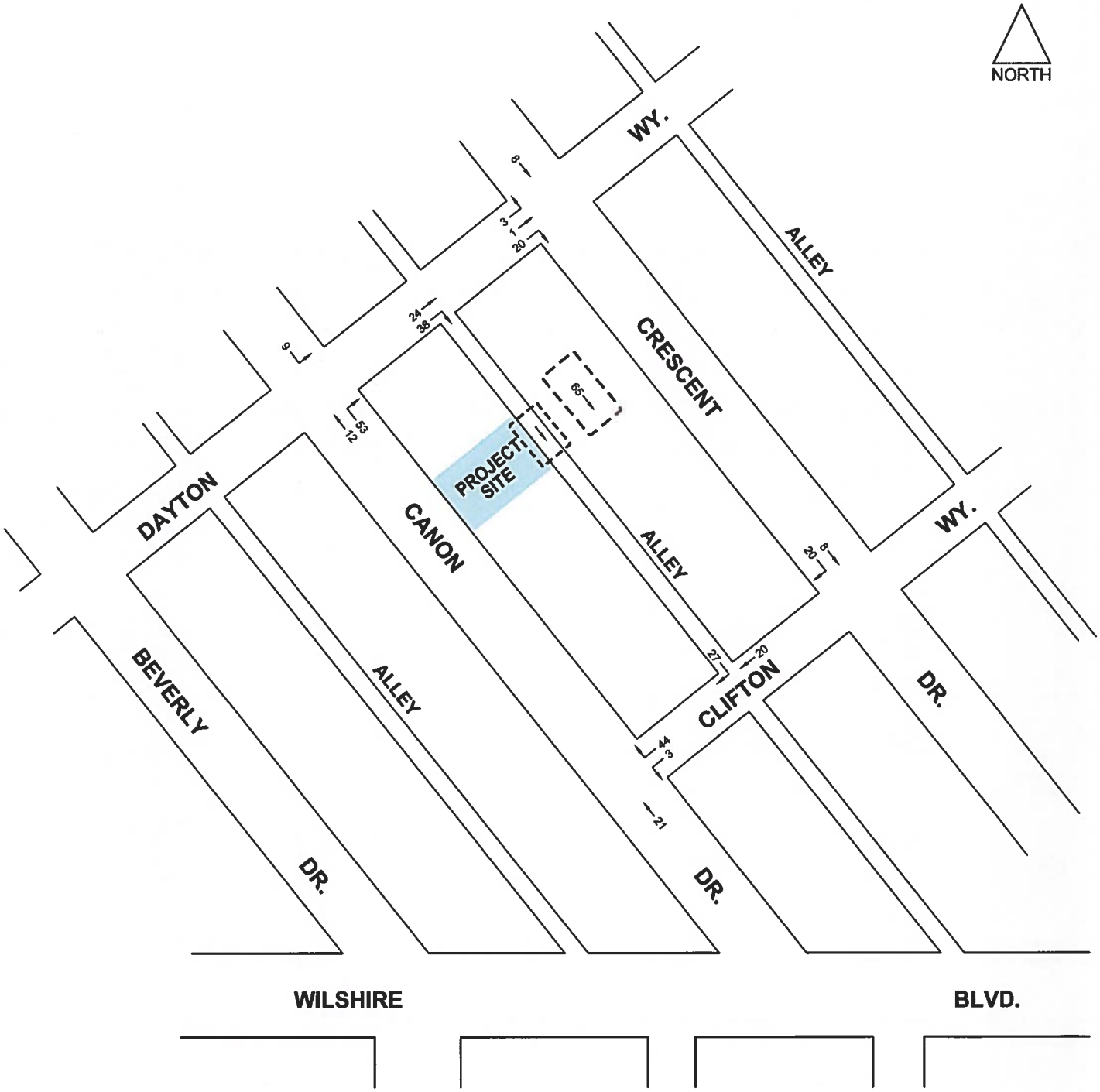

FIGURE 5-5

9/12/2016

CanonDr(248)BevHills\PMPRJVOLS-GEN

PROJECT TRAFFIC VOLUMES
WEEKDAY PM PEAK HOUR OF GENERATOR

CRAIN & ASSOCIATES
Transportation Planning
Traffic Engineering
300 Corporate Pointe, Suite 470
Culver City, California 90230
PH (310) 473 6508 F (310) 444 9771
www.crainandassociates.com

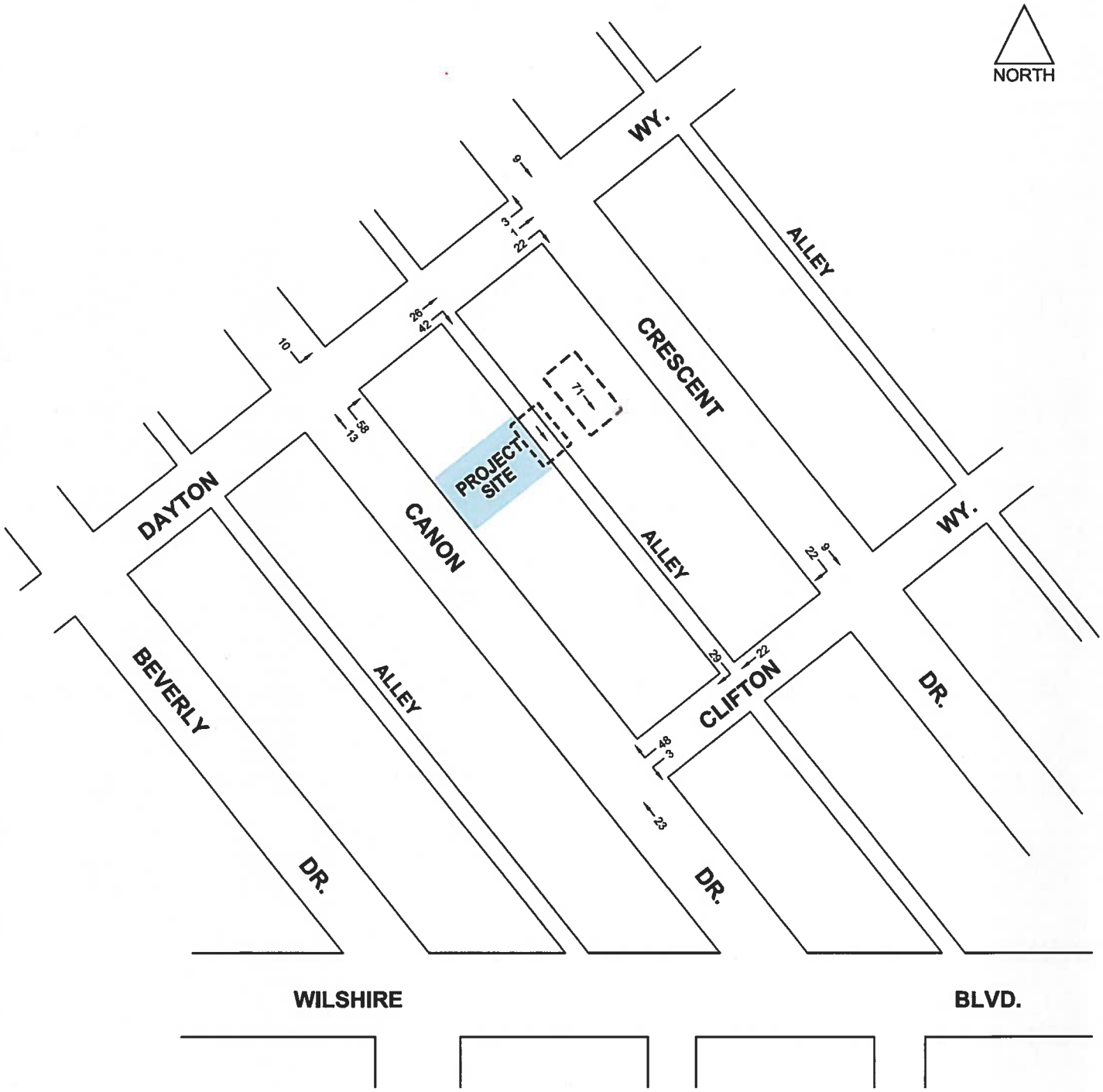

FIGURE 5-6

9/12/2016

CanonDr(248)BevHills\SATPRJVOLS-GEN

PROJECT TRAFFIC VOLUMES
SATURDAY PEAK HOUR OF GENERATOR

CRAIN & ASSOCIATES
Transportation Planning
Traffic Engineering
300 Corporate Pointe, Suite 470
Culver City, California 90230
PH (310) 473 6508 F (310) 444 9771
www.crainandassociates.com

6.0 EXISTING WITH PROJECT TRAFFIC CONDITIONS

The Existing With Project traffic conditions are defined by the traffic volumes, roadways, and intersection configurations and controls that currently exist in the year 2016, and the addition of traffic that would be generated by the completed Project. Ambient and Related Projects traffic growth, and any future roadways or infrastructure improvements, were not included in this analysis, as this analysis is of the Existing condition for the year 2016.

The Existing With Project traffic volumes are illustrated in Figures 6-1 and 6-2 and were analyzed according to the previously discussed ICU and HCM procedures. These volumes were used to determine the impacts attributable to the Project relative to Existing volumes. The definition of a significant traffic impact and its determination are described in Section 8.0. The Existing With Project results and impacts are evaluated in Section 9.0 and Table 9-1. The LOS analysis worksheets for Existing With Project conditions are provided in Appendix C.

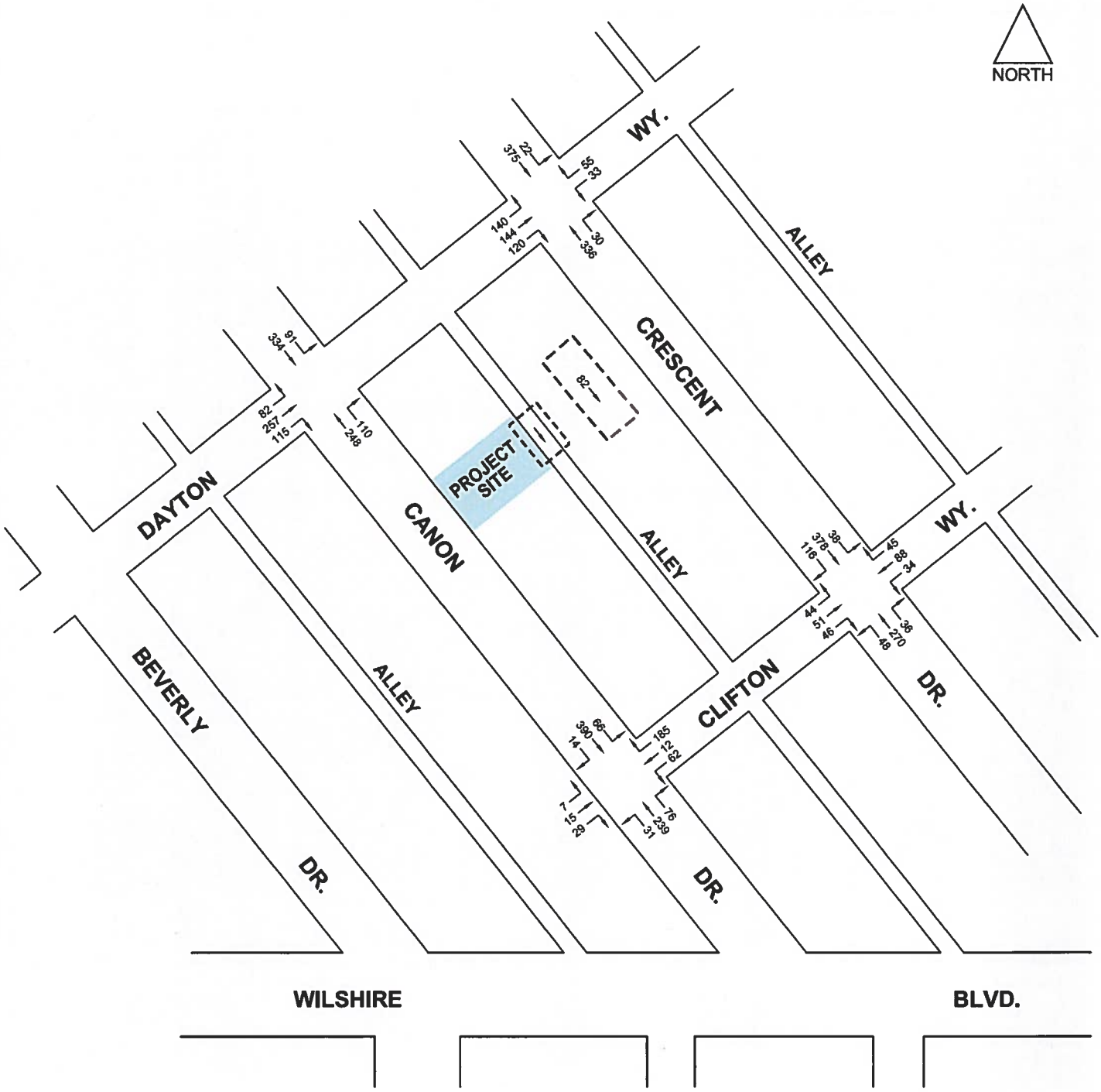

FIGURE 6-1

9/12/2016

CanonDr(248)BevHillsMD2016WP

EXISTING (2016) WITH PROJECT TRAFFIC VOLUMES
MIDDAY PEAK HOUR

CRAIN & ASSOCIATES
Transportation Planning
Traffic Engineering
300 Corporate Pointe, Suite 470
Culver City, California 90230
PH (310) 473 6508 F (310) 444 9771
www.crainandassociates.com

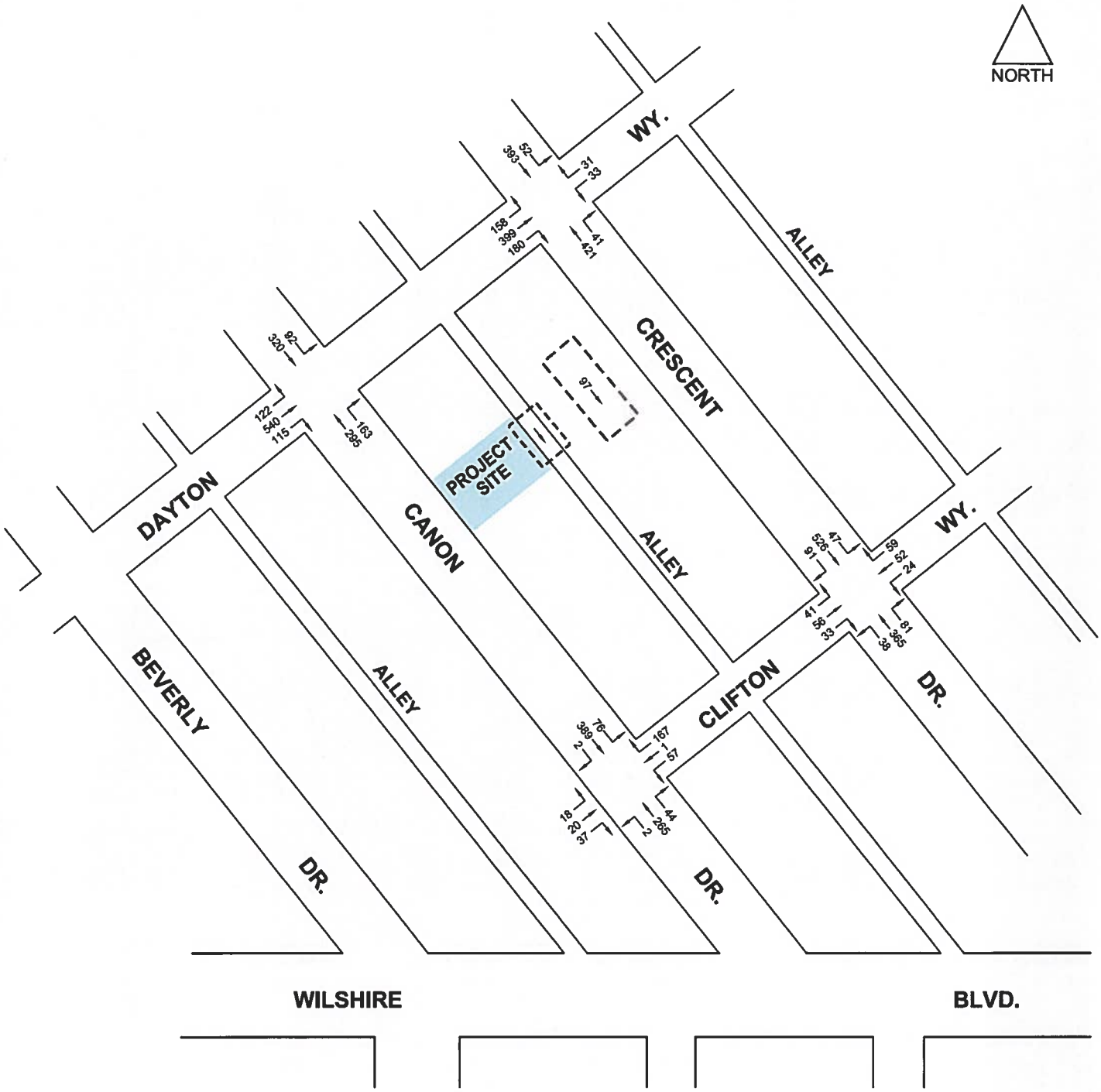

FIGURE 6-2

9/12/2016

CanonDr(248)BevHills\PM2016WP

EXISTING (2016) WITH PROJECT TRAFFIC VOLUMES
PM PEAK HOUR

CRAIN & ASSOCIATES
Transportation Planning
Traffic Engineering
300 Corporate Pointe, Suite 470
Culver City, California 90230
PH (310) 473 6508 F (310) 444 9771
www.crainandassociates.com

7.0 FUTURE TRAFFIC CONDITIONS

The future traffic conditions are forecast by incorporating traffic growth onto existing traffic conditions from two sources. One source is the ambient growth in traffic, which reflects increases in traffic due to regional growth and development outside the study area. The other source is traffic attributable to projects in the vicinity of the study area that are proposed, approved or under construction, commonly referred to as "Related Projects." The combined traffic volume increases from these two sources provided the basis for the analysis of the "Future Without Project" condition. Project traffic was then analyzed as an incremental addition to the Future Without Project traffic volumes, forming the traffic volumes for the "Future With Project" condition.

7.1 Ambient Traffic Growth

As determined in consultation with the City STE, an ambient growth factor of 1.0 percent per year was applied to the existing (2016) traffic volumes to reflect the effects of regional growth and development over the two-year period through the study year 2018. This is the year the Project is anticipated to be completed. This growth-factoring established the future baseline volumes for the analysis.

7.2 Related Projects Traffic Characteristics

This study also considered the impacts of the Project relative to Related Projects in the study area that could contribute traffic volumes to the study intersections through the year 2018. Information regarding current Related Projects within the study area was obtained from the City of Beverly Hills. A total of 11 Related Projects were identified as potential contributors of significant traffic volumes to the study intersections. These Related Projects are summarized in Table 7-1 and depicted in Figure 7-1.

The Related Projects listing obtained from the City contained the corresponding AM and PM peak-hour trip generations, which were used in the analysis. Similar to the Project trip generation, the AM peak-hour trip generations were assumed to represent the Midday peak-hour trip generations of the Related Projects.

The distribution and assignment of the Related Projects trips to the study area street system were estimated using assumptions and procedures similar to those previously described for the Project trips. The total Related Projects volumes at the study intersections are presented in Figures 7-2 and 7-3 for the respective Midday and PM peak hours.

Table 7-1: Related Project Descriptions and Trip Generations

	PROJECT NAME	ADDRESS	SIZE	PROJECT DESCRIPTION	DAILY	MIDDAY PK HR IN	MIDDAY PK HR OUT	MIDDAY PK HR TOTAL	PM PK HR IN	PM PK HR OUT	PM PK HR TOTAL
1.	General Office Project	325 N. Maple Drive	50,000 sf	General Office	550	68	9	77	13	62	75
2.	The Bohbot	257 N. Canon Drive	28,727 sf	General Office	316	39	5	44	7	36	43
			15,899 sf	Retail	683	10	6	16	29	31	60
					999	49	11	60	36	67	103
3.	9900 Wilshire Blvd. Project	9900 Wilshire Boulevard	134 rm	Hotel	1,195	47	38	85	56	43	99
			193 du	Condominium	806	13	52	65	45	28	73
			18,400 sf	Retail	772	11	7	18	33	36	69
			14,200 sf	High-Turnover Restaurant	1,263	65	14	79	80	48	128
					4,036	136	111	247	214	155	369
4.	Hotel/Residential Project	9876 Wilshire Boulevard	(46) rm	Hotel	376	16	10	26	14	13	27
			110 du	Condominium	645	8	41	49	39	19	58
			5,000 sf	Quality Restaurant	450	2	2	4	25	12	37
			5,000 sf	Retail	969	16	10	26	42	45	87
					2,440	42	63	105	120	89	209
5.	Jim Falk Lexus Project	9230 Wilshire Boulevard	150,300 sf	Automobile Sales	3,000	64	44	108	41	76	117
6.	Mixed-Use Condominium Project	9200 Wilshire Boulevard	53 du	Condominium	311	4	20	24	19	9	28
			8,400 sf	Retail	1,357	22	14	36	59	63	122
			5,600 sf	Quality Restaurant	504	2	2	4	28	14	42
					2,172	28	36	64	106	86	192
7.	Mixed-Use Project[a]	8767 Wilshire Boulevard	21,000 sf	General Office	116	14	3	17	3	13	16
			34,000 sf	Medical-Dental Office	614	41	21	62	31	45	76
			3,000 sf	High-Turnover Restaurant	191	9	9	18	10	7	17
			15,500 sf	Automobile Sales	259	10	8	18	10	12	22
			1,500 sf	Pharmacy/Drugstore w/o Drive-Through	68	3	3	6	4	5	9
					1,248	77	44	121	58	82	140
8.	8600 Wilshire Blvd. Project	8600 Wilshire Boulevard	21 du	Condominium	123	1	8	9	7	4	11
			4,800 sf	Retail	944	15	10	25	41	44	85
			2,500 sf	Retail	(107)	(2)	(1)	(3)	(5)	(5)	(10)
					960	14	17	31	43	43	86
9.	Medical Office Building Project	121 San Vicente Boulevard	35,000 sf	Medical-Dental Office	1,265	68	18	86	35	95	130
10.	Ecto Homes Project	9212 Olympic Boulevard	13,300 sf	General Office	146	18	2	20	4	16	20
			1,000 sf	Fast-Food Restaurant w/o Drive-Through	716	35	28	63	27	25	52
			4,700 sf	Variety Store	206	15	17	32	14	10	24
					1,068	68	47	115	45	51	96
11.	O'Gara Coach Company Project	8955 W. Olympic Boulevard	19,800 sf	Automobile Sales	660	26	18	44	24	30	54
				TOTAL	18,398	640	418	1,058	735	836	1,571

Source:
Trip generation provided by the City of Beverly Hills.

Notes:
[a] Trip generation reduced by 50%. Assumed the project is partially occupied.
du Dwelling Unit
rm Room
sf Square Feet

7.3 Future Year 2018 Traffic Volumes

The future weekday Midday and PM peak-hour traffic volumes at the four study intersections for the Future Without Project conditions are illustrated in Figures 7-4 and 7-5, respectively. The Future With Project weekday Midday and PM peak-hour traffic volumes are provided in Figures 7-6 and 7-7, respectively.

7.4 Future Highway Improvements

No roadway or traffic signal improvements affecting the capacity of the study intersections were identified.

FIGURE 7-1

8/4/2016

FN: CanonDr(248)BevHills\RELPROJS

RELATED PROJECTS LOCATION MAP

CRAIN & ASSOCIATES
Transportation Planning
Traffic Engineering
2007 Sawtelle Boulevard
Los Angeles California 90025
PH (310) 473 6508 F (310) 444 9771
www.crainandassociates.com

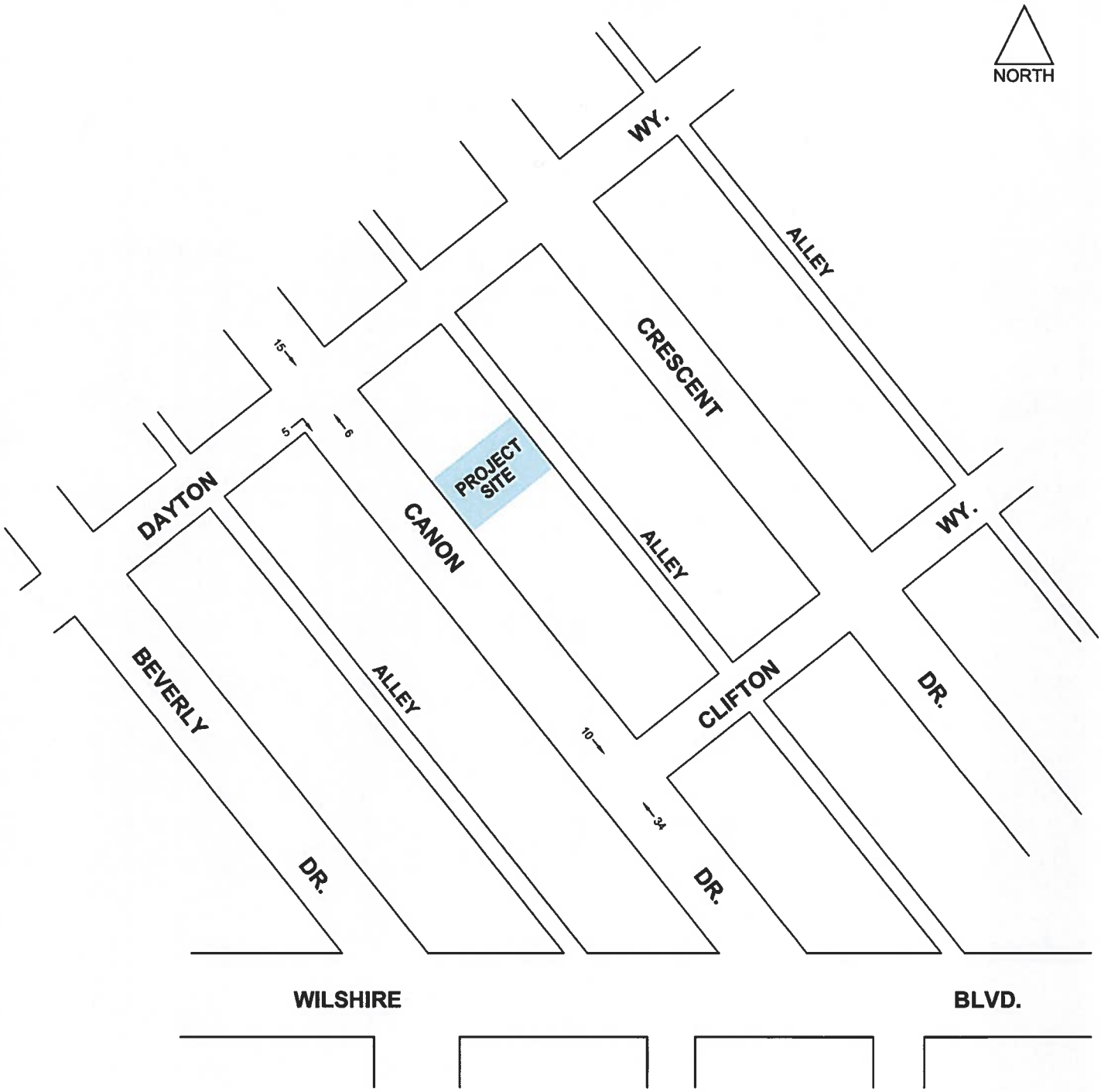

FIGURE 7-2

8/4/2016

CanonDr(248)BevHills\MDRELPRJS

RELATED PROJECTS TRAFFIC VOLUMES
MIDDAY PEAK HOUR

CRAIN & ASSOCIATES
Transportation Planning
Traffic Engineering
300 Corporate Pointe, Suite 470
Culver City, California 90230
PH (310) 473 6508 F (310) 444 9771
www.crainandassociates.com

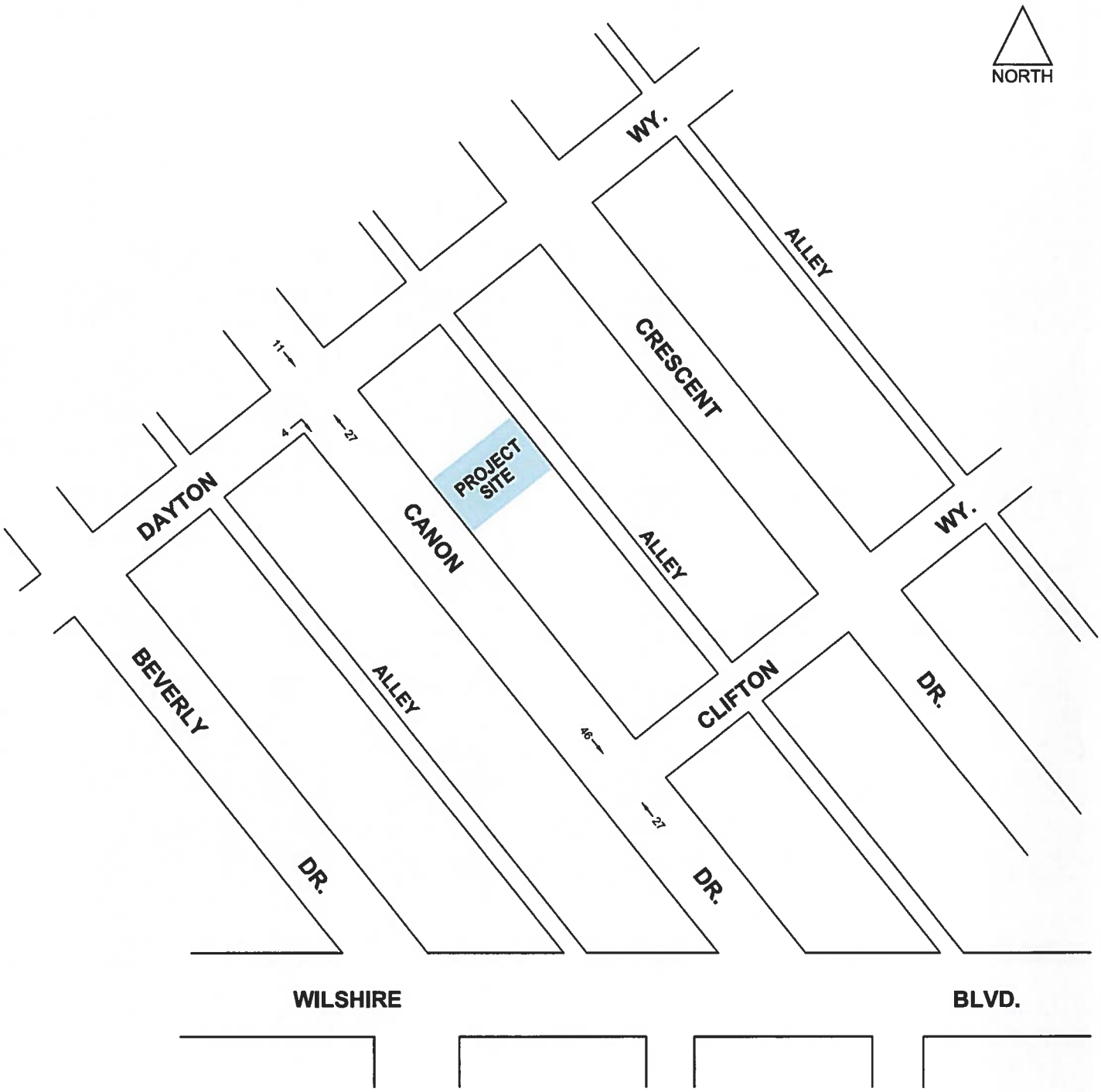

FIGURE 7-3

8/4/2016

CanonDr(248)BevHills\PMRELPRJS

RELATED PROJECTS TRAFFIC VOLUMES
PM PEAK HOUR

CRAIN & ASSOCIATES
Transportation Planning
Traffic Engineering
300 Corporate Pointe, Suite 470
Culver City, California 90230
PH (310) 473 6508 F (310) 444 9771
www.crainandassociates.com

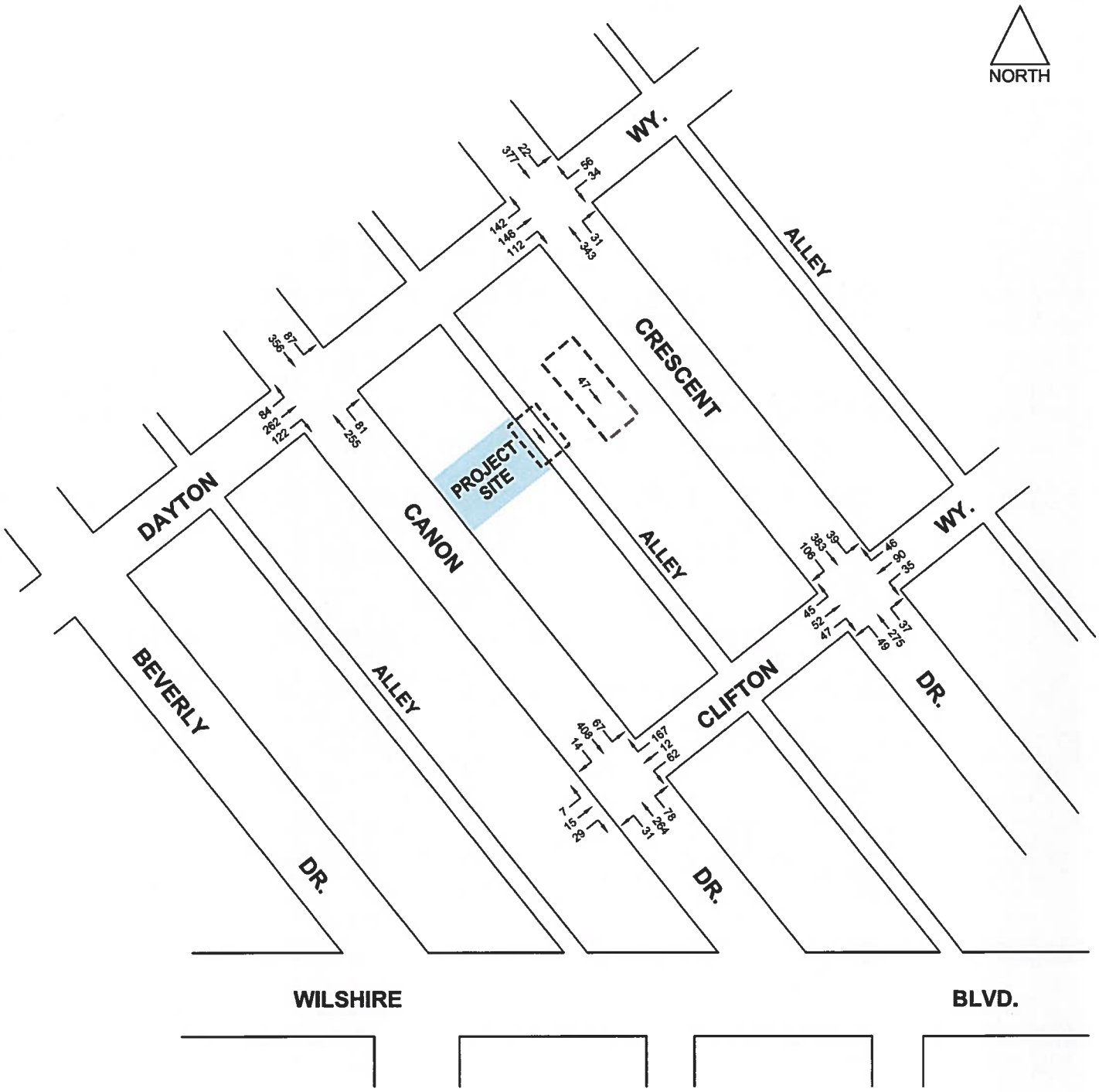

FIGURE 7-4

8/4/2016

CanonDr(248)BevHills\AM2018WO

FUTURE (2018) TRAFFIC VOLUMES
WITHOUT PROJECT
MIDDAY PEAK HOUR

CRAIN & ASSOCIATES
Transportation Planning
Traffic Engineering
300 Corporate Pointe, Suite 470
Culver City, California 90230
PH (310) 473 6508 F (310) 444 9771
www.crainandassociates.com

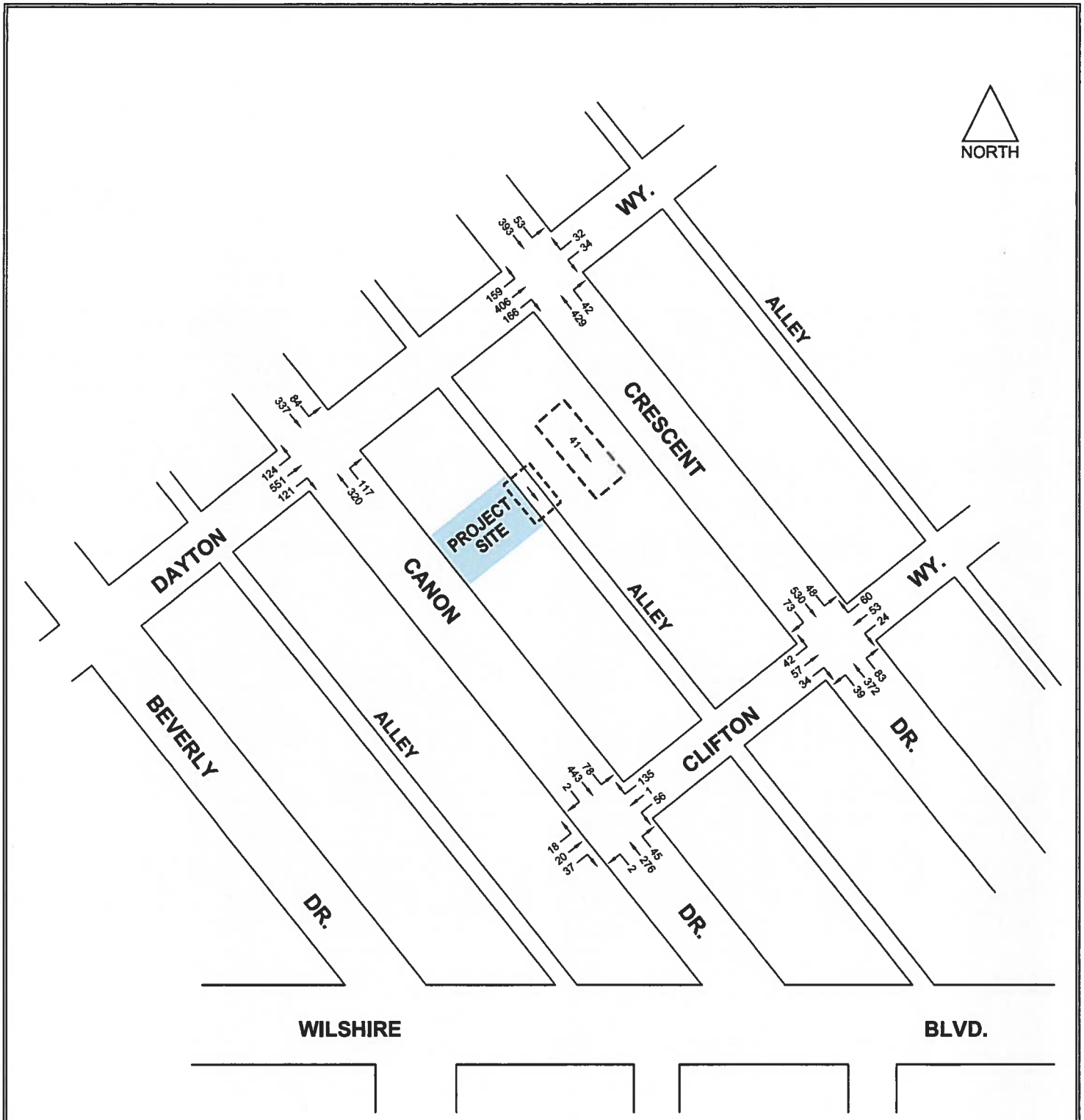

FIGURE 7-5

8/4/2016

CanonDr(248)BevHills\PM2018WO

FUTURE (2018) TRAFFIC VOLUMES
WITHOUT PROJECT
PM PEAK HOUR

CRAIN & ASSOCIATES
Transportation Planning
Traffic Engineering
300 Corporate Pointe, Suite 470
Culver City, California 90230
PH (310) 473 6508 F (310) 444 9771
www.crainandassociates.com

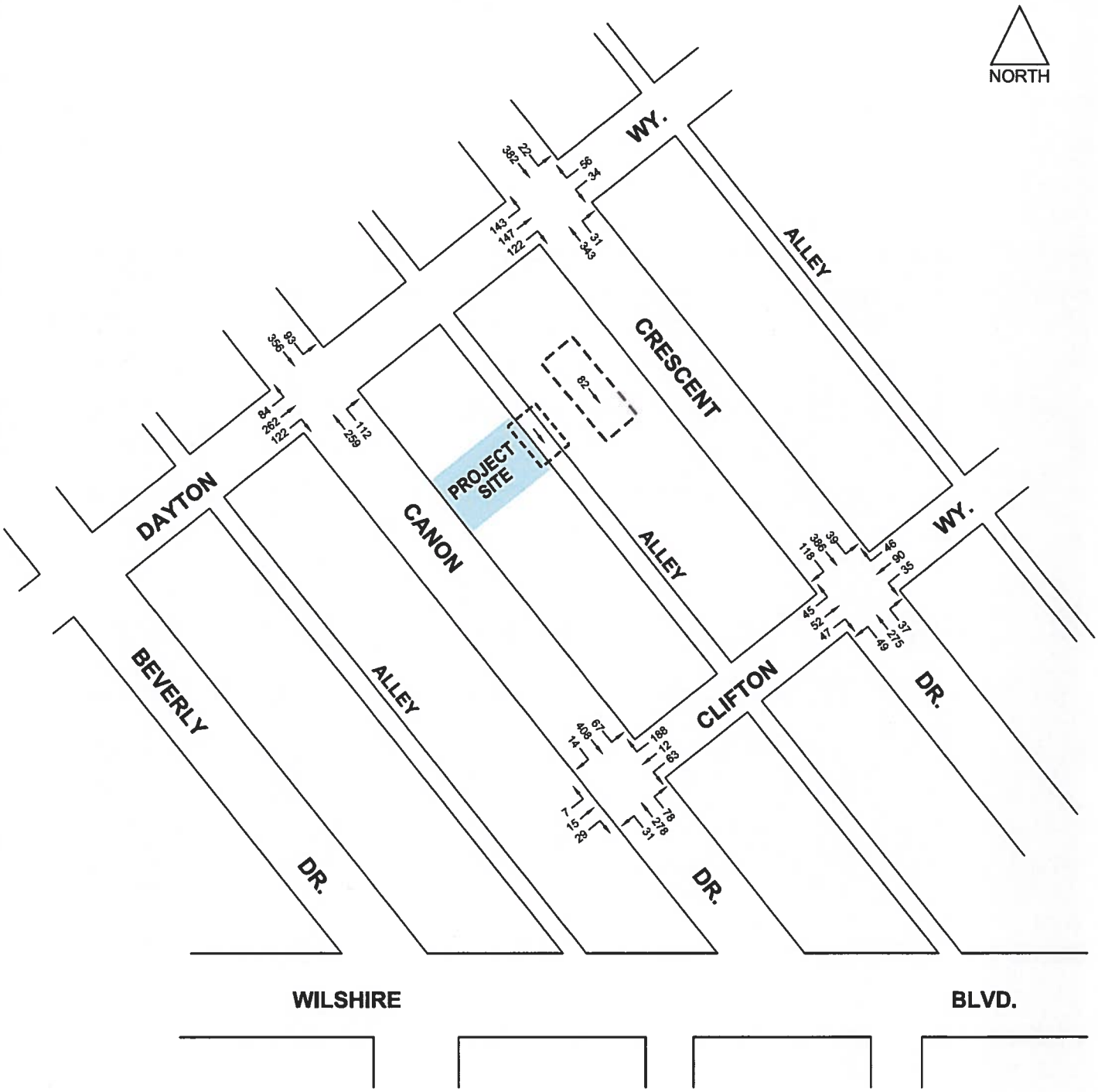

FIGURE 7-6

9/12/2016

CanonDr(248)BevHills\MD2018WP

FUTURE (2018) TRAFFIC VOLUMES
WITH PROJECT
MIDDAY PEAK HOUR

CRAIN & ASSOCIATES
Transportation Planning
Traffic Engineering
300 Corporate Pointe, Suite 470
Culver City, California 90230
PH (310) 473 6508 F (310) 444 9771
www.crainandassociates.com

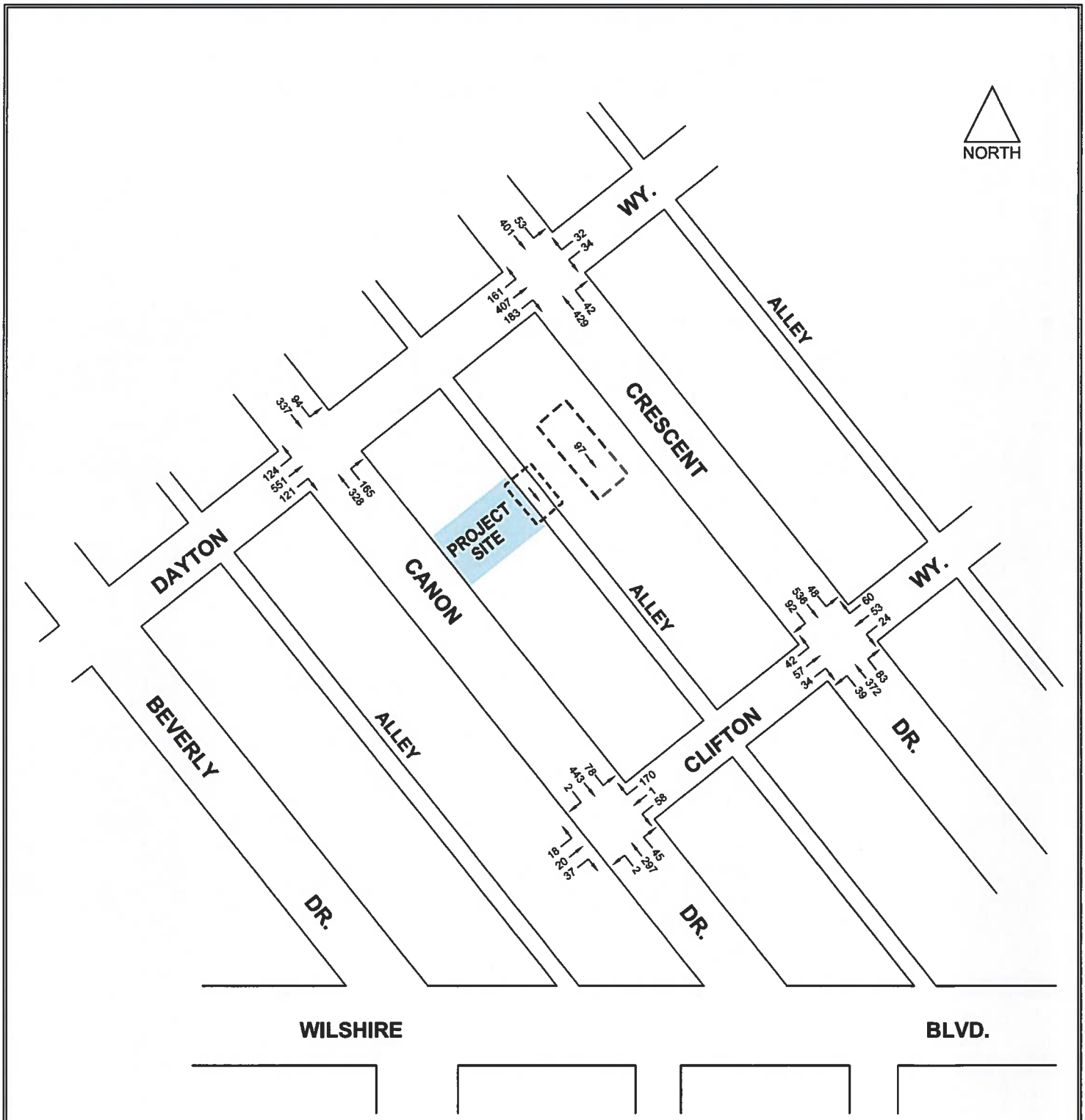

FIGURE 7-7

9/12/2016

CanonDr(248)BevHills\PM2018WP

FUTURE (2018) TRAFFIC VOLUMES
WITH PROJECT
PM PEAK HOUR

CRAIN & ASSOCIATES
Transportation Planning
Traffic Engineering
300 Corporate Pointe, Suite 470
Culver City, California 90230
PH (310) 473 6508 F (310) 444 9771
www.crainandassociates.com

8.0 TRAFFIC IMPACT ANALYSIS METHODOLOGY

8.1 Intersection Analysis Methodology

The four study intersections were evaluated using the analysis methodologies approved by the City of Beverly Hills for signalized and unsignalized intersections. For signalized intersections, the Intersection Capacity Utilization (ICU) method of analysis was utilized to determine the Volume-to-Capacity (V/C) ratios for the intersections. For the unsignalized, all-way stop controlled intersections, the Highway Capacity Manual (HCM) methodology was utilized to determine the average vehicular delay for the intersection.

8.2 Intersection Analysis Scenarios

Traffic conditions and, as applicable, Project traffic impacts, were analyzed at the study intersections for the following conditions:

- Existing (2016) Conditions;
- Existing (2016) With Project Conditions, includes Project trips;
- Future (2018) Without Project Conditions, includes ambient traffic growth and Related Projects trips;
- Future (2018) With Project Conditions, includes ambient traffic growth, Related Projects trips, and Project trips; and
- Implementation of Project mitigation measures, where necessary.

8.3 Intersection Thresholds and Impact Criteria

The significance of the potential impacts of Project traffic at each study intersection was identified according to the City of Beverly Hills traffic impact thresholds of significance. These thresholds define a significant project traffic impact relative to the level of service, V/C ratios, and delay per vehicle (seconds). The significant impact criteria, which affect LOS D, E, and F conditions, are presented in Tables 8-1 and 8-2.

Table 8-1: City of Beverly Hills Criteria for Significant Intersection Traffic Impact – Signalized Intersection

LOS	Final V/C Ratio	Project-Related Increase in V/C Ratio
D	>0.800-0.900	Equal to or greater than 0.030
E,F	>0.900	Equal to or greater than 0.020

Table 8-2: City of Beverly Hills Criteria for Significant Intersection Traffic Impact – Unsignalized (All-Way Stop) Intersection

LOS	Final Delay/Vehicle	Project-Related Increase in Average Vehicle Delay
D	>25 seconds	Equal to or greater than 4.0 seconds
E,F	>35 seconds	Equal to or greater than 3.0 seconds

The City requires mitigation of project traffic impacts whenever project traffic causes an increase of the analyzed intersection V/C ratio or delay by an amount equal to or greater than the values shown above.

9.0 TRAFFIC IMPACT ANALYSIS

Summaries of the V/C ratios, vehicular delays (seconds), and LOS values for the four study intersections during the weekday Midday and PM peak hours under existing and future conditions, without and with the Project, are shown in Table 9-1. The ICU and HCM data worksheets for the analyzed intersections are contained in Appendix C.

Table 9-1: Level of Service (LOS) Analysis Summary
Existing (2016) and Future (2018) Traffic Conditions, Without and With Project

			Existing (2016)					Future (2018)				
			Existing		With Project			Without Project		With Project		
No.	Intersection	Peak Hour	V/C / Delay	LOS	V/C / Delay	LOS	Impact	V/C / Delay	LOS	V/C / Delay	LOS	Impact
1	Canon Drive/	Midday	0.639	B	0.654	B	0.015	0.649	B	0.664	B	0.015
	Dayton Way	PM	0.773	C	0.798	C	0.025	0.792	C	0.817	D	0.025
2	Crescent Drive/	Midday	0.391	A	0.392	A	0.001	0.397	A	0.397	A	0.000
	Dayton Way	PM	0.616	B	0.616	B	0.000	0.626	B	0.627	B	0.001
3	Canon Drive/	Midday	13.0	B	13.6	B	0.6	13.7	B	14.3	B	0.6
	Clifton Way	PM	11.4	B	12.0	B	0.6	12.2	B	12.9	B	0.7
4	Crescent Drive/	Midday	12.2	B	12.3	B	0.1	12.4	B	12.6	B	0.2
	Clifton Way	PM	14.1	B	14.4	B	0.3	14.4	B	14.8	B	0.4

9.1 Existing (2016) Conditions

All four intersections are operating at good service levels under existing conditions (i.e., LOS C or better during the weekday Midday and PM peak hours). The existing traffic volumes at the study intersections during the weekday Midday and PM peak hours are presented in Figures 4-2 and 4-3, respectively.

9.2 Existing (2016) With Project Conditions

With the addition of Project trips, V/C ratios and delays would increase at the study intersections. There would be no change in the LOS designations at any intersections relative to Existing conditions. The impacts attributable to the Project would also be less than significant and no Project mitigation would be required. The Existing (2016) With Project traffic volumes at the study intersections during the weekday Midday and PM peak hours are illustrated in Figures 6-1 and 6-2, respectively.

9.3 Future (2018) Without Project Conditions

Under Future Without Project conditions, which includes the addition of ambient growth and Related Projects traffic, all of the study intersections are expected to operate at LOS C or better during the weekday Midday and PM peak hours. The Future (2018) Without Project traffic volumes for the weekday Midday and PM peak hours are shown in Figures 7-4 and 7-5,

respectively.

9.4 Future (2018) With Project Conditions

With the addition of Project traffic to Future volumes, the LOS at the study intersections would continue to be the same as under Future Without Project conditions, with the exception of Canon Drive/Dayton Way during the PM peak hour, which would worsen to LOS D. The impacts of the Project at the study intersections would all be less than significant. Accordingly, no traffic mitigation would be required of the Project under this condition either. The Future (2018) With Project traffic volumes during the weekday Midday and PM peak hours are shown in Figures 7-6 and 7-7, respectively.

9.5 Alley Segment Analysis

The City STE requested an operational analysis of the one-way southbound alley at the rear of the Project site between Dayton Way and Clifton Way. This alley will be used by valet attendants to directly access the Project garage, the spaces behind the Hilton & Hyland office building, and spaces leased in the adjacent 270 N. Canon Drive parking lot. The alley is 20 feet wide and designated for one-way southbound operation.

Despite the designated one-way operation southbound, review of the traffic count data shows that the alley is also used by northbound traffic. The 24-hour machine count shows a fair amount of northbound alley traffic; however, an analysis of the supplemental Midday and PM peak-period turning movement counts at the intersection of the alley and Dayton Way indicates that the northbound volume is, on average, equal to approximately 13.9 percent of the southbound volume. It is surmised that the northbound machine count pneumatic hose was "mishit," resulting in the substantial double-counting of southbound vehicles as northbound vehicles. As the alley is designated one-way southbound, only southbound volumes have been included in this analysis. In order to be conservative and provide a more true representation of alley traffic volumes (and as recommended by the City STE), the northbound volumes (approximately 13.9 percent of the southbound volumes) were added to the southbound traffic volumes. The adjusted alley volumes are summarized in Table 9-2.

Table 9-2: One-Way Southbound Alley Segment Analysis

	Existing (2016) Volumes	Project Volumes	Existing (2016) With Project Volumes
Midday	47	35	82
PM	41	56	97
PM Generator	41	65	106
ADT	477	618	1,095

It is estimated that the Project would add 618 trips per weekday to the alley, including 35 trips during the Midday peak hour, 56 trips during the PM peak hour, and 65 trips during the PM Peak Hour of the Generator. Although these additive trips would substantially increase alley traffic volumes, it is anticipated that they would be reasonably accommodated by the alley's operation. The alley is of standard width and currently used by traffic at a moderate level. As its traffic flow is predominantly in one direction, there is only a minor amount of opposing traffic, providing for more freedom of movement and fewer conflicts.

According to the turning movement count for the intersection of the one-way southbound alley and Dayton Way, approximately 12 percent of the southbound Midday peak-period traffic on the alley is trucks. This percentage decreases to approximately two percent during the PM peak period. Any conflicts between Project traffic and truck traffic are expected to be minor. Project traffic would be lower during the Midday peak period when truck traffic on the alley is higher. Conversely, truck traffic on the alley is lower during the PM peak period when Project traffic would be higher.

Further, as discussed in Appendix A, with the use of the adjacent off-site parking lot to temporarily park Project vehicles, as necessary, before they are moved to the on-site garage, there would be no blockage of the alley by "waiting-to-be-parked" Project vehicles. Therefore, it is estimated that the impact of Project traffic on alley operations would be less than significant.

10.0 CONGESTION MANAGEMENT PROGRAM TRAFFIC IMPACT ASSESSMENT

The Congestion Management Program (CMP) is intended to address the impact of local growth on the regional transportation system. The Project has been analyzed per the *2010 Congestion Management Program for Los Angeles County* to determine potential impacts to CMP intersection and freeway monitoring locations and to transit.

10.1 Intersections

The following CMP intersection monitoring location in the Project vicinity has been identified:

- Santa Monica Boulevard/Wilshire Boulevard (CMP ID 5)

The guidelines require that intersection monitoring locations must be examined if the proposed project will add 50 or more trips during either the weekday AM or PM peak hour. The proposed Project will add no more than 17 trips during either peak hour to the above CMP intersection. Therefore, no further review for potential impacts to this intersection is warranted.

10.2 Freeways

The CMP TIA guidelines require that freeway monitoring locations must be examined if the proposed project will add 150 or more trips (in either direction) during either the weekday AM or PM peak hour. No CMP freeway monitoring locations are located in the Project vicinity. Further, the Project trip generation during both peak hours will be well under 150 trips. Therefore, no further review of potential impacts to freeway monitoring locations is warranted.

10.3 Transit Impact Review

The Project trip generation, as shown in Table 5-2, was used to forecast person transit trips. Per the CMP guidelines, a person trip is equal to 1.4 vehicle trips and transit trips are equal to a factor of 3.5 percent of the Project vehicle trips. The calculations are as follows:

- Midday Peak Hour = 35 × 1.4 × 3.5% = 2 Person Transit Trips
- PM Peak Hour = 56 × 1.4 × 3.5% = 3 Person Transit Trips
- PM Peak Hour of Generator = 65 × 1.4 × 3.5% = 3 Person Transit Trips
- Daily Trips = 618 × 1.4 × 3.5% = 30 Person Transit Trips

Therefore, it is estimated that there would be approximately 30 Project person trips per day using transit, including two person trips during the Midday peak hour, three person trips during the PM peak hour, and three person trips during the PM peak hour of the Generator.

There are five bus lines within reasonable walking distance of the Project site. This minor addition of Project person trips to bus transit would not be expected to result in a significant transit impact.

11.0 MITIGATION MEASURES

As indicated in the preceding analyses, the Project is not expected to significantly impact any study intersections, CMP monitoring locations, or public transit. Therefore, no transportation-related mitigation measures are required of the Project.

12.0 SUMMARY AND CONCLUSIONS

- ***Project Description*** – The Project is a new three-level building for a high-end, quality restaurant containing approximately 3,240 square feet of indoor/outdoor dining and bar area and up to approximately 216 seats. It is anticipated that the Project will be completed and operational by 2018. The Project site also includes the existing 15,683 square-foot Hilton & Hyland office building at 250 N. Canon Drive, which will remain as part of the Project.

- ***Project Parking*** – It is estimated that the Project's on-site garage will have a parking supply able to accommodate up to approximately 102 vehicles on three subterranean levels which will be accessed via two elevators, each of which transports one vehicle at a time. Four ADA parking spaces at the rear of the Hilton & Hyland office building (and adjacent to the one-way southbound alley) will also be provided. The Project will lease spaces in the adjacent 270 N. Canon Drive parking lot on the southwest corner of Dayton Way and the one-way southbound alley, which will provide 13 spaces available after 5:30 PM on weekdays and all-day on weekends. Further, if necessary during special events, the Project will rent additional spaces in the adjacent 270 N. Canon Drive parking lot (up to 38 total spaces) or rent spaces in the Crescent Drive North public parking lot (333 N. Crescent Drive) or the Whole Foods Market parking lot (239 N. Crescent Drive). This parking supply would meet or exceed the code parking requirement of 106 spaces for the Project on weekdays and weekends.

- ***Vehicular Site Access and Circulation*** – A valet parking station will be located in front of the Project site on Canon Drive that will accommodate approximately five vehicles. Under the Project parking operations plan, vehicles will be driven by valet attendants to the on-site garage and other parking facilities located off the one-way southbound alley at the rear of the Project site. All delivery and return of vehicles to and from the garage/parking will be in a clockwise circulation pattern. The leased spaces in the 270 N. Canon Drive parking lot will serve to provide transitional parking for Project vehicles, along with supplemental parking as necessary. Use of this lot will also minimize queuing and congestion in the alley by Project vehicles accessing the garage. It is estimated that the overall time for valet attendants to deliver and park customer vehicles within the garage would be approximately 4.5 to 5.0 minutes, which includes time for vehicle shuffling on the garage parking level. Retrieving vehicles from the garage and returning them to customers would also take approximately 4.5 to 5.0 minutes, including vehicle shuffling. These times are within the norm according to local valet parking firms and discussions with City staff. It is anticipated that the Project parking operations plan would function adequately under typical conditions.

- ***Special Events Management*** – It is anticipated that the Project will handle very few special events per year. The restaurant will operate as a restaurant, with most patron seating at two-person and four-person tables, for the vast majority of the time. When infrequent special events do occur, it is likely that the restaurant will maintain a seating capacity equal to or less than its planned 216 seats. Therefore, valet operation will occur as under normal restaurant conditions, as outlined further in Appendix A. As with any special events occurring in the City, City staff will be notified and coordinated with on a special event plan. If it is determined that additional valet attendants will be necessary, they will be provided. If overflow parking is deemed appropriate, the Project will rent additional spaces in the adjacent 270 N. Canon Drive parking lot (up to 38 total spaces) or rent spaces in the Crescent Drive North public parking lot (333 N. Crescent Drive) or the Whole Foods Market parking lot (239 N. Crescent Drive).

- ***Restaurant Loading Activities*** – Restaurant truck loading activities will occur at the rear of the Project site, adjacent to the one-way southbound alley. A delivery loading zone will be provided immediately south of the parking spaces located behind the 250 N. Canon Drive office building. It is anticipated that Project truck deliveries will occur between 7:00 AM and 11:00 AM. Although the number of truck delivery trips cannot be estimated at this time, the number is expected to be small due to the use of consolidated foodservice distributors such as Sysco. The presence of a truck in the delivery loading zone will not impede access to the Project garage, access to the parking spaces behind the 250 N. Canon Drive building, or southbound traffic flow on the alley.

- ***Study Scope*** – The four study intersections below were selected for detailed level of service analyses under Existing (2016), Existing (2016) With Project, Future (2018) Without Project, and Future (2018) With Project traffic conditions:

  - Canon Drive/Dayton Way
  - Crescent Drive/Dayton Way
  - Canon Drive/Clifton Way *(all-way stop controlled)*
  - Crescent Drive/Clifton Way *(all-way stop controlled)*

  The analysis focused on assessing potential traffic impacts during the Midday and PM peak hours on a typical weekday since these would be representative of the combined peak traffic conditions associated with the Project and existing and cumulative conditions.

  In addition to the four study intersections, the following study street segment in the Project vicinity also was identified for analysis by City of Beverly Hills staff:

  - One-way southbound alley between Dayton Way and Clifton Way

- ***Existing Traffic Conditions*** – All four intersections are operating at good service levels (LOS C or better) during the weekday Midday and PM peak hours under existing conditions.

- ***Project Trip Generation*** – It is estimated that the Project would generate 618 daily trips, including 35 trips (25 inbound/10 outbound) during the Midday peak hour and 56 trips (38 inbound/18 outbound) during the PM peak hour. The Project would generate an estimated 65 trips (38 inbound/27 outbound) during the weekday PM Peak Hour of the Generator and 71 trips (42 inbound/29 outbound) during the Saturday Peak Hour of the Generator.

- ***Existing (2016) With Project Traffic Conditions*** – With the addition of Project trips, the LOS at all four study intersections would be the same as under Existing conditions. The Project is not expected to have a significant impact at any of the four study intersections.

- ***Related Projects*** – A total of 11 related projects were considered as part of the future year traffic analysis. These 11 related projects are all located in the City of Beverly Hills.

- ***Future (2018) Without Project Traffic Conditions*** – With the inclusion of ambient growth and related projects to the existing traffic volumes, all four study intersections are expected to operate at LOS C or better during the weekday Midday and PM peak hours.

- ***Future (2018) With Project Traffic Conditions*** – All four study intersections would continue to operate at the same LOS as under Future Without Project conditions, except at the intersection of Canon Drive/Dayton Way, which would worsen to LOS D in the PM peak hour. The Project is not expected to have a significant impact at any of the four study intersections.

- ***Alley Analysis*** – Project traffic would substantially increase traffic volumes on the one-way southbound alley. However, given the moderate level of existing alley traffic and that the alley is designated for one-way operation which provides better capacity, it is anticipated that Project traffic would be reasonably accommodated by the alley's operation. In addition, with the use of the nearby leased parking lot (270 N. Canon Drive) next to the alley, there would be no blockage of the alley by Project vehicles waiting to be parked in the Project garage. It is estimated that the impact of Project traffic on the alley would be less than significant. Given that the peak-period traffic counts at the alley intersection with Dayton Way and 24-hour machine count on the alley indicated some illegal northbound traffic volumes, it is recommended that there be

increased police enforcement of traffic movements on this alley.

- ***CMP Traffic Assessment*** – The Project impacts on CMP arterial monitoring intersections, freeway monitoring locations, and transit operations would be less than the designated thresholds. No further CMP review is warranted.

- ***Mitigation Measures*** – The Project is not expected to significantly impact any study intersections, CMP monitoring locations, or public transit. Therefore, no transportation-related mitigation measures are required of the Project.

APPENDIX A

PROJECT PARKING OPERATIONS PLAN AND ANALYSIS

A. PROJECT PARKING OPERATIONS PLAN AND ANALYSIS

A.1 Project Parking Supply/Capacity

The Project's on-site parking garage, located at the rear of the Project site and next to the one-way southbound alley, will have three subterranean levels. These levels will be accessed via two elevators, each of which transports one vehicle at a time. Each level will have 28 vehicle spaces, with half of the spaces being accessible by a lift that allows for vertical vehicular storage. An additional six valet-assisted spaces will be provided on each level. In total, the garage will have a parking supply/capacity for 102 vehicles. A valet attendant will remain with each vehicle until it is parked or stored. Four additional ADA parking spaces will be provided behind the Hilton & Hyland office building at 250 N. Canon Drive.

Through a lease agreement, the Project has also procured the use of parking spaces within the adjacent parking lot on the southwest corner of Dayton Way and the one-way southbound alley after 5:30 PM on weekdays and all-day on weekends. Thirteen of this lot's 38 total parking spaces will be used to supplement the parking supply of the Project, as necessary. It is worth noting that 11 of the 13 leased spaces are immediately accessible off the alley and will be used by valet attendants as transitional parking for vehicles waiting to be parked in the garage. This capability will mitigate potential queuing of Project vehicles on the alley, ensuring that the alley remains accessible to other vehicles.

Thus, the Project will have a parking supply of 106 spaces prior to 5:30 PM on weekdays. This supply will increase to 119 spaces after 5:30 PM on weekdays and on all-day on weekends. These parking supplies meet or exceed the code parking requirement of 106 spaces for the Project.

A.1.1 Garage Elevator Lift Capacity

Based on vehicle elevator lift system information gathered by the Project's general contractor (see Exhibit A-1), an estimate of each garage elevator's lift capacity was determined based on the component tasks that comprise parking a vehicle within the parking garage and retrieving a vehicle from the parking garage. The 4-post high capacity mechanical freight lift elevator proposed to be installed for vertical vehicle conveyance is specified to travel at a speed of approximately 100 feet per minute. Given that the third (bottom) level of subterranean parking would be a maximum of approximately 55 feet below ground level, it would take the elevator approximately 33 seconds to travel between the one-way southbound alley and the lowest parking level. Interpolating linearly, it is expected that the elevator travel times between the alley and the first and second levels of Project parking would be approximately 11 and 22 seconds, respectively.

In order to determine how many vehicles will be able to be moved by each elevator within a

specific timeframe, the component tasks for parking and retrieving a vehicle were first examined. When parking a car, the following tasks affect the elevator lift capacity: loading the vehicle onto the elevator from the alley, vertical conveyance of the vehicle to the appropriate parking floor, and unloading the vehicle from the elevator onto the parking floor. When retrieving a car, the following tasks affect the elevator capacity: loading the vehicle onto the elevator from the parking floor, vertical conveyance of the vehicle to the alley, and unloading the vehicle from the elevator to the alley. The time necessary to park a vehicle once it is on a parking level and the time to prepare a vehicle on a parking level to be loaded on the elevator back to the alley do not factor into the elevator's lift capacity, as the elevators can be conveying vehicles while these tasks occur.

With three levels of parking, it is expected that the valet attendants will utilize the first level of subterranean parking initially, when parking demand is lower, and then expand the parking of vehicles into the second and third levels as demand increases. With an equal parking supply on all three levels, it is anticipated that the average vertical conveyance for a vehicle being parked or retrieved would be somewhere between the first and second parking levels. In order to provide more conservative timing/capacity estimates, it has been assumed that the average vertical conveyance would be between the alley and second parking level and would take approximately 22 seconds.

The estimated elevator component times for parking a vehicle would be approximately 20-30 seconds to load the vehicle onto the elevator from the alley, 22 seconds to vertically convey the vehicle, and 20-30 seconds to unload the vehicle from the elevator onto the parking floor. The total time the car elevator would be occupied with parking a vehicle would, therefore, be approximately 72 seconds. Similarly, the estimated elevator component times for retrieving a vehicle would be approximately 20-30 seconds to load the vehicle onto the elevator from the parking floor, 22 seconds to vertically convey the vehicle, and 20-30 seconds to unload the vehicle from the elevator onto the alley. The total time the car elevator would be occupied with retrieving a vehicle would then be approximately 72 seconds.

Under the inefficient scenario where a vehicle is being parked and the elevator is then returning empty to the alley to load another car to be parked, another 22 seconds of vertical conveyance should be added to the 72-second estimate from the last paragraph, resulting in 94 seconds for this overall operation. Likewise, if the elevator is inefficiently only retrieving vehicles, the 22 seconds required for the elevator to descend from the alley to the parking floor to retrieve a vehicle must be added, resulting in an overall 94-second time estimate. Based on these time estimates, the garage elevators would be able to handle approximately 38 vehicles per hour if they were each inefficiently used for parking only or retrieving only. With two elevator lifts, this translates into an operational capacity of approximately 76 vehicles per hour (inbound and outbound).

However, it is not expected that these garages will operate so inefficiently, especially during the periods of peak parking demand. As shown in Table 5-2 in the body of the report, the weekday PM Peak Hour of the Generator and the Saturday Peak Hour of the Generator are the two analyzed time periods where the greatest number of inbound and outbound vehicles are expected to utilize the Project parking. 65 total vehicle trips are expected during the weekday PM Peak Hour of the Generator, while 71 total vehicle trips are anticipated for the Saturday Peak Hour of the Generator. Both of these time periods exhibit a well-balanced inbound/outbound directional split, with 59 percent of trips arriving at the site and 41 percent of them departing. With such a balance of inbound and outbound trips, it is fully expected that the garage lifts will be used more efficiently (i.e., lower to unload a vehicle to be parked and then rise with a retrieved vehicle to deliver to a valet attendant on the same trip). This more efficient use of the garage elevator lifts will increase the operational capacity well beyond 76 vehicles per hour. It is also expected that efficiency of the elevator lift system will increase as valet and garage personnel become familiar with the system and develop the most effective methods for using it.

A.2 Project Parking Circulation

Customers driving to the Project will pull up to the curb on the east side of Canon Drive in front of the Project site, where there will be a valet parking station. It is anticipated that permission will be obtained from the City for the use of curb space accommodating approximately five vehicles. Two valet parking spaces will be installed at the location of the existing surface parking lot driveway, and the three metered spaces north of the driveway and adjacent to the Hilton & Hyland office building will be converted to valet parking spaces. Customer vehicles will then be driven by valet attendants to the on-site garage and associated parking facilities located at the rear of the Project site and along the one-way southbound alley. All delivery and return of vehicles to and from the garage will be in a clockwise circulation pattern. For the delivery of a vehicle to the Project garage, the valet attendant will drive northbound on Canon Drive, make a right-turn onto Dayton Way and proceed to the one-way southbound alley, then make a right-turn onto the alley and proceed to deliver the vehicle for parking in the garage. If the access area next to the garage is not clear, the valet attendant will temporarily park the vehicle in one of the parking spaces located in the transitional parking spaces immediately off the alley leased by the Project at 270 N. Canon Drive. For the return of a vehicle from the garage, a valet attendant will retrieve the vehicle from its location within the garage, drive southbound on the alley, make a right-turn onto Clifton Way and proceed to Canon Drive, then make a right-turn onto Canon Drive and proceed to the curb in front of the Project site. The Project parking circulation routes and estimated times are illustrated in Exhibit A-2.

For employees of and visitors to the 250 N. Canon Drive building who park in the Project garage

during daylight hours, they will utilize the same valet system but will not drop off their vehicles on Canon Drive. They will arrive by driving down the one-way southbound alley to the rear of the 250 N. Canon Drive building. Valet attendants will then drive those vehicles and park them within the Project garage. Employees and visitors leaving the 250 N. Canon Drive building will have their vehicles retrieved and brought out to the alley by valet attendants, after which they will depart southbound on the alley to Clifton Way.

A.3 Project Valet Parking Operations

The Project will utilize as many valet attendants as necessary in order to provide an efficient and effective valet parking operation. During periods of peak demand, it is anticipated that the Project will provide eight (8) valet attendants at the front of the building, two (2) valet attendants at the Project garage entrance at the rear of the building, and a minimum of two (2) valet attendants on each floor of the Project garage. According to conversations with representatives of two local valet parking firms, it frequently takes up to seven minutes for the delivery and/or return of vehicles to and from off-site parking locations in busy and popular areas such as Beverly Hills. To reduce the waiting time for departing customers, the Project will have a procedure in place whereby customers will give their parking tickets to restaurant front staff when they ask for their bill. The front staff will then call for the customer's vehicle, which will be brought to the front of the building by a valet attendant.

A.3.1 Project Parking Circulation Test Runs

Vehicular test runs were performed for the Project in order to estimate the times it would take for the valet parking circulation route. These test runs were conducted on Thursday, May 26, 2016 during the lunch and dinner periods, and Saturday, June 4, 2016 during the dinner period. These runs were along Canon Drive, Dayton Way, the one-way southbound alley, and Clifton Way, following the parking circulation route that will be used by valet attendants. Fifteen runs each were made for the delivery and return trips. The times recorded were for the driving time only, whether from the valet zone on Canon Drive to the Project garage access point on the alley or vice versa. The 85th percentile time to deliver a vehicle from the front of the Project site on Canon Drive to the alley access point for the Project garage, based on all 45 test runs, was approximately 82 seconds (with an average time of 67 seconds). The return trip from the alley access point to the front of the Project site had an 85th percentile time of approximately 112 seconds (with an average time of 92 seconds). All of these runs were done at normal speeds consistent with the prevailing traffic conditions and controls. The Project test run data sheets are included in Exhibits A-3 to A-6.

A.3.2 Il Pastaio Parking Operations Survey

In order to have a reference point for valet parking circulation times, the valet parking

operation for the Il Pastaio restaurant at 400 N. Canon Drive was surveyed. This restaurant is located approximately one-and-one-half blocks north of the Project site. The survey was conducted on Saturday evening, June 4, 2016, from approximately 7:00 to 8:30 PM. It should be noted that Il Pastaio is on the northeast corner of Canon Drive and Brighton Way, and that Brighton Way is one-way westbound. Compared to the Project, much longer circulation routes are involved for the delivery of Il Pastaio customer vehicles to its parking lots off the north-south alley paralleling Canon Drive and the three-level parking structure at 375 N. Crescent Drive (on the southwest corner of the intersection with Brighton Way). On the other hand, compared to the Project, the Il Pastaio circulation routes for the return of customer vehicles are much shorter and absent traffic controls. Consequently, the average delivery time for Il Pastaio customer vehicles was 107 seconds, while the average return time was 37 seconds. The average of the two times is 72 seconds, slightly but not substantially less than the comparable average for the Project runs (the average of 67 seconds and 92 seconds is approximately 80 seconds). The Il Pastaio survey data sheets are included in Exhibits A-7 and A-8. It should also be noted that survey personnel were not permitted on-site access to the parking structure at 375 N. Crescent Drive. Their observations and time measurements were conducted from the public right-of-way (i.e., the sidewalk). While they were unable to actually see and time the parking operations of Il Pastaio vehicles inside the parking structure, they were able to recognize and time some of the valet attendants as they entered and exited the structure to retrieve vehicles to return them to customers. Five such samples were obtained, resulting in an average of 1 minute and 51 seconds. It would be reasonable to assume that this average is not only indicative of the time it took for the valet attendants to conduct their maneuvers to retrieve parked vehicles, but also the time it took for them to conduct their maneuvers to park and store vehicles.

A.4 Overall Parking Operations Analysis

As previously discussed, the Project garage's two elevator lifts would be able to handle at a minimum approximately 76 vehicles per hour (with that capacity being much higher during peak parking periods with balanced inbound/outbound activity). This operational capacity has been compared to the weekday Midday (lunch), PM peak-hour, PM Peak Hour of the Generator, and Saturday Peak Hour of the Generator trip generations[1], as follows:

- Weekday Midday Peak Hour, 35 trips (vehicles) generated
    - *76 vehicles per hour capacity vs. 35 vehicles per hour*

[1] As recommended by the City STE, the AM Peak Hour of Generator trip rate was assumed to represent the Midday peak-hour trip generation for the restaurant. The AM Peak Hour of Generator represents the highest hourly volume of traffic entering and exiting a quality restaurant during the weekday AM hours (12:00 AM to 11:59 AM) and, therefore, is likely to occur close to the lunch hour. The PM peak hour represents the one-hour vehicle trip generation between 4:00 PM and 6:00 PM on a weekday when the combination of quality restaurant traffic and traffic on the adjacent street is highest. The PM Peak Hour of Generator represents the highest hourly volume of traffic entering and exiting a quality restaurant during the weekday PM hours (12:00 PM to 11:59 PM). The Saturday Peak Hour of Generator represents the highest hourly volume of traffic entering and exiting a quality restaurant on a Saturday, which may occur during the AM or PM hours.

- *41-vehicle "surplus"*

- Weekday PM Peak Hour, 56 trips (vehicles) generated
  - *76 vehicles per hour capacity vs. 56 vehicles per hour*
  - *20-vehicle "surplus"*
- Weekday PM Peak Hour of Generator, 65 trips (vehicles) generated
  - *76 vehicles per hour capacity vs. 65 vehicles per hour*
  - *11-vehicle "surplus"*
- Saturday Peak Hour of Generator, 71 trips (vehicles) generated
  - *76 vehicles per hour capacity vs. 71 vehicles per hour*
  - *5-vehicle "surplus"*

As indicated above, the operational capacity of the garage itself would be sufficient to accommodate the amount of arriving/departing vehicles during all four evaluated peak hours. Given the conservative calculation of the garage lift capacity and the anticipated balanced split of arriving/departing vehicles during the Weekday PM Peak Hour of Generator and Saturday Peak Hour of the Generator (59% inbound/41% outbound), it is likely that the "surpluses" during these hours would be even greater. However, the adjacent 270 N. Canon Drive parking lot, which will be leased by the Project, will provide 13 spaces and storage capacity after 5:30 PM on weekdays and all-day on weekends. Eleven (11) of these spaces are immediately off the one-way southbound alley and will provide transitional parking for Project vehicles as they wait to be to be parked in the garage when operational capacity permits. Use of this lot will also minimize queuing and congestion in the alley by Project vehicles accessing the garage. In addition, this lot will provide supplement parking for the Project as conditions warrant. With this additional capacity during the Weekday PM Peak Hour of Generator and Saturday Peak Hour of Generator, it is expected that the Project parking will have sufficient operating capacity during all analyzed time periods. The Sunday Peak Hour of Generator for the restaurant was not analyzed, as its trip generation would be lower than the Saturday Peak Hour of Generator.

It should be noted that the above comparisons are conservative, as they do not account for reductions in patron parking demand attributable to ridesharing services or reductions in employee parking demand due to the provision of on-site bicycle parking.

As requested by City staff, an examination of the Project's weekday AM peak hour parking demand was also performed for the Hilton & Hyland office building at 250 N. Canon Drive. The existing office building includes 15,683 square feet of office space. Based on this size of use and using trip rates from the current Institute of Transportation Engineers (ITE) Trip Generation, 9th Edition manual, the office building is expected to generate approximately 24 trips during the weekday AM peak hour. This trip total is comprised of 21 inbound trips and 3 outbound trips. With a conservative garage elevator capacity of 76 vehicles per hour, the Project will adequately process these morning office use trips.

As shown in Exhibit A-1, the ACC-6 Double Park Lift system proposed to be installed for vehicle parking on each of the Project's three subterranean parking levels is specified to have different lifting and lowering speeds. The time required to lift a vehicle is 60 seconds, plus or minus 20 percent, whereas the time required to lower a vehicle is 30 seconds, plus or minus 20 percent. In order to be conservative, vehicle lifting and lowering times of 72 seconds (60 seconds + 20%) and 36 seconds (30 seconds + 20%), respectively, were assumed for the Project's parking lift system.

Based on the Project test run times, as well as aforementioned vehicle elevator lift system and park lift system speed information, the overall times for the delivery and retrieval of customer vehicles to and from the Project garage were estimated, as follows:

- <u>Valet Vehicle Delivery Time:</u>
    - Restaurant Front-to-Garage Vehicle Driving Time (85th %-ile) = 82 seconds
    - Vehicle Loading from Alley to Garage Elevator = 25 seconds
    - Garage Elevator Vertical Conveyance = 22 seconds
    - Vehicle Unloading from Elevator to Parking Level = 25 seconds
    - Raised Vehicle Parking via Park Lift System = 72 seconds
    - TOTAL DELIVERY TIME = 226 seconds
- <u>Valet Vehicle Retrieval Time:</u>
    - Vehicle Lowered via Park Lift System = 36 seconds
    - Vehicle Loading from Parking Level to Garage Elevator = 25 seconds
    - Garage Elevator Vertical Conveyance = 22 seconds
    - Vehicle Unloading from Elevator to Alley = 25 seconds
    - Garage-to-Restaurant Front Vehicle Driving Time (85th %-ile) = 112 seconds
    - TOTAL RETRIEVAL TIME = 220 seconds

As shown above, it is anticipated that these reasonably calculable components of the valet vehicle delivery and retrieval times would total in the range of 3.5 to 4.0 minutes. However, these calculations do not include the time required for vehicle shuffling on the Project parking levels in order to park and/or retrieve vehicles. Given that six valet-assisted parking spaces will be provided on each level (which in some cases will block a parking stall), it may be necessary for valets to shuffle up to two vehicles in order to park or retrieve one vehicle. With multiple valets stationed on each floor of the Project garage to handle that floor's vehicle maneuvering, it is expected that the shuffling of up to two vehicles will be an efficient process. As a conservative estimate, it is assumed that such vehicle shuffling would take approximately one minute. Therefore, the overall valet vehicle delivery and retrieval times are anticipated to be in the 4.5-to-5.0 minute range.

These overall times compare favorably with those obtained from the Il Pastaio survey when taking into account the time spent by that restaurant's valet attendants in the 375 N. Crescent Drive parking structure. As noted earlier, the Project parking circulation routes and average times are illustrated in Exhibit A-2. These overall times are also within the five-to-seven minute range typically experienced by two local valet parking firms, as previously mentioned. Therefore, considering all of these factors, it is anticipated the Project parking operations plan would function adequately under typical conditions.

Exhibit A-1

General Contractor Garage Lift and Parking Lift Specification Information

// FL4M-10 SPEC 37562

4-Post Mechanical Freight Lift for Safe, Reliable, High Capacity Load Transfer Between Multiple Levels.

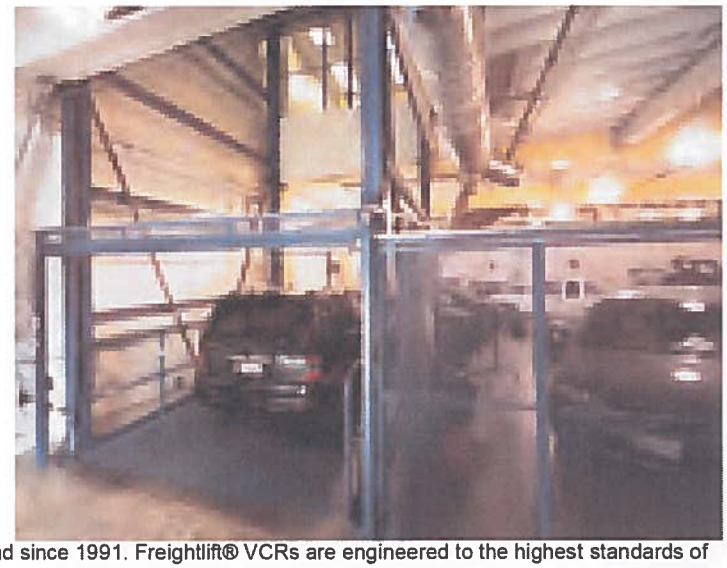

Autoquip's 4-post high capacity mechanical vertical conveyors (VRCs) employs an industry-best heavy duty SEW Eurodrive gear motor drive with instantaneous braking capability that ensures consistent, repeatable stopping and holding of the suspended carriage during loading and unloading. Because the carriage is supported in each corner, carriage sizes can be extremely large and load capacities can be very high. The high capacity 4-Post mechanical freightlift travels up to 100 feet with capacities to 20,000 pounds and speeds ranging from 10 FPM TO 150 FPM. Mechanical VRCs are often used for transfer of vehicles between landings, multi-level buildings, and with programmable/automated conveyor systems. The mechanical 4 Post VRC is designed to improve the use of vertical building space, and built to enhance the stability and safety during load transfer. Freightlift mechanical VRC's standard maintenance-free high capacity rollers, load jam sensing system, and certified free-fall arrest carriage brakes make it the most reliable, durable, and safe VRC material lift available anywhere. As with all Autoquip VRC lifts, the 4-Post Mechanical VRC offers the customer flexibility to select any number of standard options or to specify one or more custom engineered features to fit a specific application. Autoquip has designed and manufactured the Freightlift® Brand of vertical reciprocating conveyors in America's heartland since 1991. Freightlift® VCRs are engineered to the highest standards of safety and reliability.

Features and Benefits

- High capacity steel rollers with spiral-wound, Teflon-impregnated bushings produce smooth and reliable carriage movement.
- Heavy duty SEW Eurodrive gear motor drive extends the life of the Freightlift for years and years of rugged, reliable service.
- Synchronized, dual-chain lifting system ensures that the carriage remains level throughout the lift's vertical travel, even with off-centered loads.
- Minimum ¼ inch thick steel reinforced platform minimizes deck deflection, maximizes load stability, and extends life of the platform deck.
- Structural steel guide beams ensure consistent, reliable tracking of carriage rollers and extends the life of the beams
- Heavy duty SEW Eurodrive gear motor requires minimal service and maintenance.
- Maintenance-free carriage rollers require no lubrication.
- Eurodrive gear motor's manual brake release overrides handle to help in lift start-up and trouble-shooting.
- Straddle design places much lower stress on the guide rollers, extending useful life.
- Autoquip offers a 1-year warranty on all parts and a 5-year warranty on lift structure as a promise that you've purchased the industry's most reliable VRC.
- Four-point lifting handles much larger and heavier loads.
- Mechanical design enables up to 100 feet of total vertical travel.
- Mechanical vertical conveyors are programmable and can be called or sent to multiple levels in a building or conveyor system.
- Open carriage sides empower customers with versatility in load transfer direction and product flow.
- Load jam sensors suspend engine operation if carriage or its load becomes jammed between landings.
- Motor control panel security requires personnel to activate a secure key switch before resuming lift operation following a load jam.
- Over-travel sensing switch suspends engine operation should the lift continue past the uppermost landing.
- Sensors on all lifting chains stop lift operation and movement if a slack chain is detected.
- Counterweight sensors serve as a back-up safety precaution to slack chain sensors by suspending engine operation when a counterweight is lifted out of the guide tube.
- Certified carriage brakes stop carriage falls in the very unlikely event of a sudden breakage of both lifting cables.
- Standard-issue shaft way barrier bar system improves personnel safety when carriage leaves the upper landing.
- Interlocked landing gates automatically lock once the vertical lift carriage leaves a landing and cannot be opened until the lift carriage returns to that landing.
- Gate status switches prevent lift operation while any gate is open.
- Minimum 3:1 structural factor of safety makes these lifts the most structurally sound lift in the industry.
- Compliance with recognized standards:
  - ASME B20.1 - Safety Requirements for Conveyors and Related Equipment

To find more information about Autoquip Products please go to our website www.autoquip.com To contact Autoquip email sales@autoquip.com or call toll free 877-360-6777. Copywrite Autoquip Corporation. All rights reserved.

- VRC Application Guidelines - as referenced by ASME B20.1
- NFPA 70 - National Electric Code
- ASTM-A36 - Structural Steel Standard
- ANSI Z535 - Safety Labeling Requirements
- AWS D.1 - Welding Standards
- Applicable portions of OSHA 29CFR1910 - General workplace safety

To find more information about Autoquip Products please go to our website www.autoquip.com To contact Autoquip email sales@autoquip.com or call toll free 877-360-6777. Copywrite Autoquip Corporation. All rights reserved.

// FL4M-10 SPEC 37562

Specifications

Travel (inches)	516
Capacity (lbs#)	8,000
Minimum Platform Width (inches)	120
Minimum Platform Length (inches)	288
Maximum Platform Width (inches)	120
Maximum Platform Length (inches)	288
Motor Size (hp)	40
Raising and Lowering Speed Loaded (fpm)	100 (fpm)
Lift Style	4 Post
Travel (feet)	43

To find more information about Autoquip Products please go to our website www.autoquip.com To contact Autoquip email sales@autoquip.com or call toll free 877-360-6777. Copywrite Autoquip Corporation. All rights reserved.

Options

Carriage

Larger Platform Sizes (refer to model specifications for minimum-maximum allowable sizes)
Handrails (for non-operating sides)
48" High Expanded Metal or Sheet Metal Side Guards (non-operating sides with snap chains across operating ends)
84" High Expanded Metal or Sheet Metal Side Guards (non-operating sides with snap chains across operating ends)
Four-way Tread Plate Approach Ramp
Spliced Carriage
Carriage Load Height -- addition or reduction from 7' standard (2-post models)
Stainless Steel Skin -- bolted or welded to carbon steel platform
Stainless Steel Deck -- 304 SS 1/4" sheet over standard carbon steel deck
Conveyor -- gravity or powered, supplied and mounted
Four-Way Tread Plate
Factory Assembled Carriage
Expanded Metal Carriage Roof Enclosure
Handrail Kickplate -- larger than 4" standard
Non Slip -- black silica sand finish

Power Unit Options

Automatic Chain Oiler
High Speed / Heavy Duty Motor

Electrical Options

Key Operated On/Off Security Lockout Switch (NEMA-12)
Extra Push Button Station -- 3 Button Up/Down, E-Stop (NEMA 4)
Key Operated Up/Down Switch (NEMA-12)
Audible Signal -- shipped loose
Audible Signal with Volume Adjust -- shipped loose
Prewired Audible Signal -- standard or adjustable (mounted in main control enclosure)
Flashing Red Light -- shipped loose
No Controls
Keylock
Lift Present Light
Limit Switch -- shipped loose for field mounting
NEMA 12 Disconnect -- mounted in control enclosure
Drop Cord Assembly
Audible Signal or Light (per station)
Car Arrival Buzzer (per station)

Gates & Enclosures

Single Swing Gates
Biparting Swing Gates
Single Panel Vertical Acting Gates
Bi Panel Vertical Acting Gates
Horizontal Sliding Gates

 Copywrite Autoquip Corporation. All rights reserved.

Back Stop Assembly Kits

Panels (standard 96" high)

Interlocks

Mast

Mast Beams (factory spliced)

Service Work Platform -- for mechanical models with handrails and guards over rotating drive components

Paint

Standard Autoquip Colors

Special Paint Options

Epoxy Paint -- customer's color can be matched with paint chip/RAL paint #, or with an Autoquip equivalent paint (2 part epoxy, sand blasting of unit recommended)

Steel-it -- stainless steel filled urethane primer and finish coating (MCU type IV for incidental food contact)

Primer Only

Tile Clad Epoxy -- sand blasting of unit required

 Copywrite Autoquip Corporation. All rights reserved.

ACC-6 DOUBLE PARK LIFT SPEED

AMERICAN
Custom Lifts
1-888-711-5438
www.aclifts.com

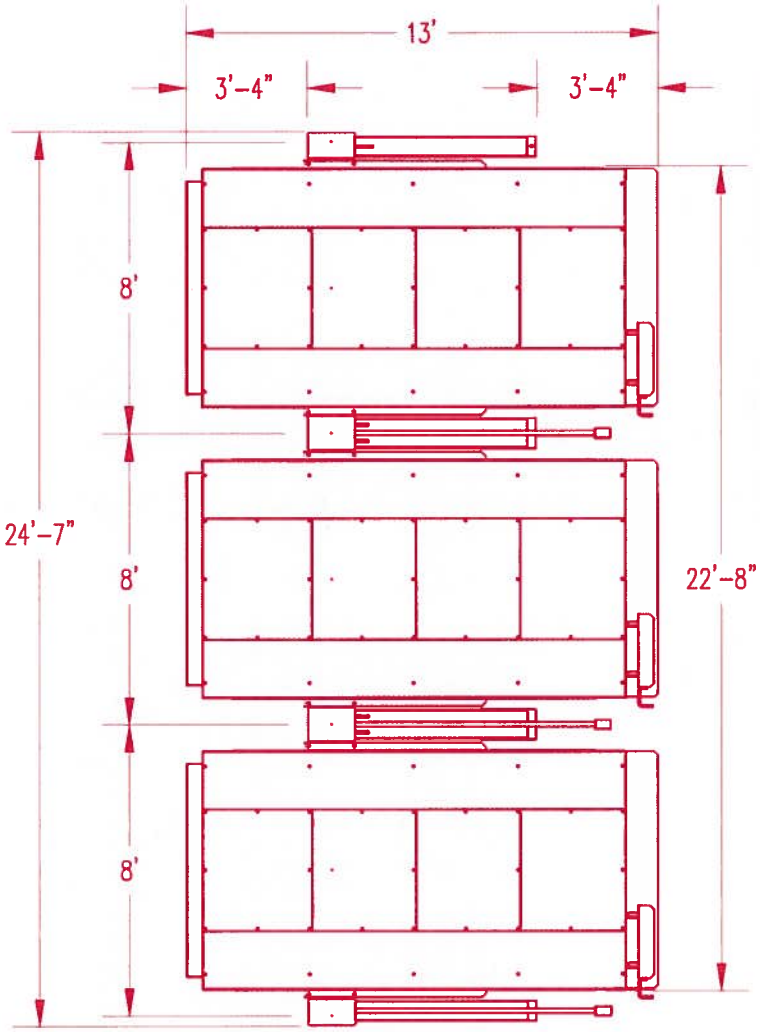

BASE ON INDIVIDUAL POWER UNITS
& SPECIFICATIONS AS NOTED BELOW
LIFT SPEED 60 SECONDS PLUS OR MINUS 20%
LOWER SPEED 30 SECONDS PLUS OR MINUS 20%
Lowering shall not exceed 20 feet per minute

Douglas W Tenery
GEMINI AUTO LIFTS, INC
637 Mockingbird Ln
Burleson, TX 76028
Cell: 682-203-8158
800-535.6932 ext. 1005
Doug.Tenery@geminilift.com

SPECIFICATIONS

MAX CAPACITY.....6000 LB
CENTERLINE WIDTH.....8'-0"
INSIDE PLATFORM WIDTH.....78"
INSIDE COLUMN WIDTH.....86"
OVERALL LENGTH.....13'
PLATFORM LENGTH.....12'-0"
MAXIMUM WHEELBASE.....129"
INSIDE HEIGHT CLEARANCE.....72"
COLUMN HEIGHT.....10'-1"

MECHANICAL LOCKS EACH COLUMN
SINGLE POINT MANUAL LOCK RELEASE
POSITIVE LOCKING REAR STOP

208/230V 1 PH INDIVIDUAL PWR UNIT

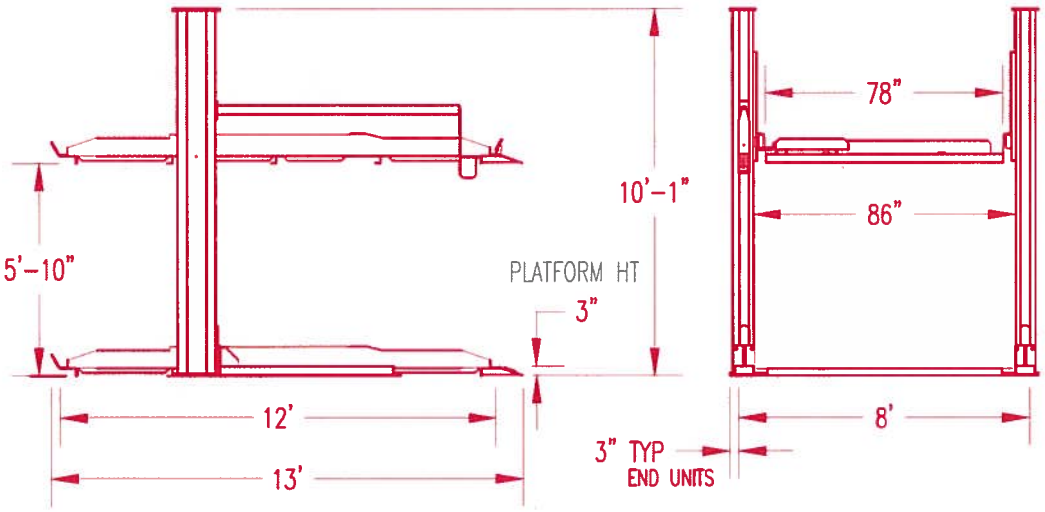

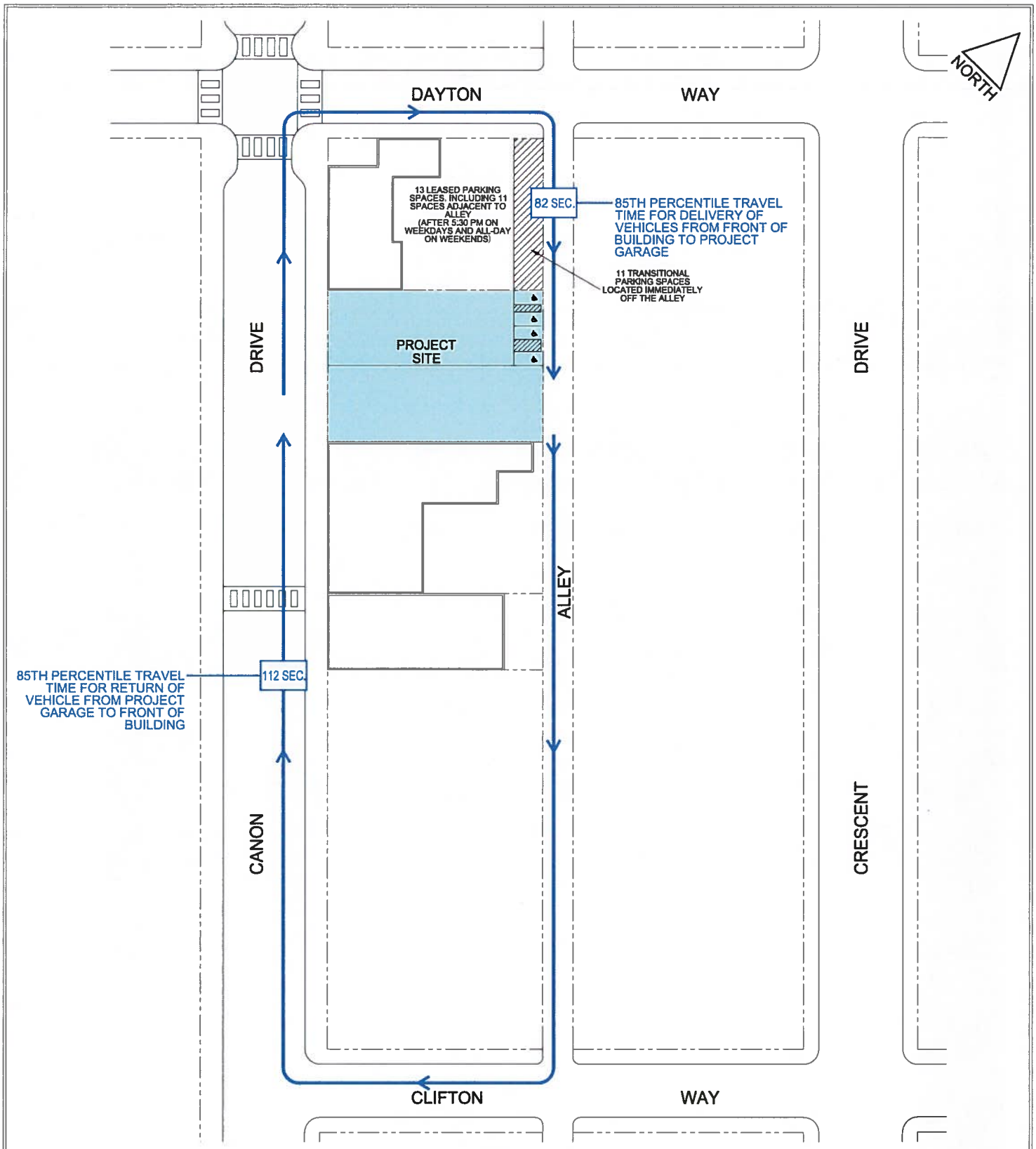

EXHIBIT A-2

9/12/2016

FN: CANON DR (248) BEV HILLS\VALET-PKG-CIRCULATION

PROJECT PARKING CIRCULATION ROUTES AND TRAVEL TIMES

CRAIN & ASSOCIATES
Transportation Planning
Traffic Engineering
300 Corporate Pointe, Suite 470
Culver City, California 90230
PH (310) 473 6508 F (310) 444 9771
www.crainandassociates.com

EXHIBIT A-3

VALET ROUTE TEST RUN TIMES

LOCATION: 250-260 N. CANON DRIVE
DAY/DATE: THURSDAY, 5/25/16
TIME: AFTERNOON

	DELIVERY		RETRIEVAL	
RUN NO.	START TIME	ELAPSED TIME	START TIME	ELAPSED TIME
1	12:00 PM	1 : 11	12:02 PM	1 : 07
2	12:05	0 : 53	12:07	1 : 10
3	12:10	1 : 21	12:12	1 : 46
4	12:15	0 : 50	12:17	1 : 12
5	12:20	1 : 24	12:22	1 : 34
6	12:25	1 : 22	12:27	1 : 07
7	12:30	1 : 29	12:32	1 : 30
8	12:35	1 : 20	12:37	1 : 11
9	12:40	1 : 27	12:42	1 : 27
10	12:45	1 : 04	12:47	1 : 03
11	12:50	1 : 18	12:52	0 : 56
12	12:55	1 : 28	12:57	2 : 26
13	1:00	1 : 21	1:02	1 : 01
14	1:05	0 : 45	1:07	0 : 52
15	1:10	1 : 17	1:12	1 : 56

EXHIBIT A-4

VALET ROUTE TEST RUN TIMES

LOCATION: 250-260 N. CANON DRIVE
DAY/DATE: THURSDAY, 5/26/16
TIME: EVENING

	DELIVERY		RETRIEVAL	
RUN NO.	START TIME	ELAPSED TIME	START TIME	ELAPSED TIME
1	7:00 PM	1 : 30	7:02 PM	1 : 48
2	7:05	1 : 16	7:07	1 : 50
3	7:10	0 : 41	7:12	1 : 44
4	7:15	1 : 14	7:17	1 : 36
5	7:20	1 : 07	7:22	1 : 30
6	7:25	1 : 15	7:27	2 : 17
7	7:30	0 : 58	7:32	1 : 15
8	7:35	0 : 34	7:37	1 : 51
9	7:40	1 : 16	7:42	1 : 31
10	7:45	1 : 17	7:47	1 : 47
11	7:50	1 : 22	7:52	1 : 15
12	7:55	1 : 17	7:57	1 : 50
13	8:00	0 : 50	8:02	1 : 13
14	8:05	0 : 46	8:07	1 : 20
15	8:10	1 : 02	8:12	1 : 49

EXHIBIT A-5

VALET ROUTE TEST RUN TIMES

LOCATION: 250-260 N. CANON DRIVE
DAY/DATE: SATURDAY, 6/4/16
TIME: EVENING

	DELIVERY		RETRIEVAL	
RUN NO.	START TIME	ELAPSED TIME	START TIME	ELAPSED TIME
1	7:00 PM	1 : 06	7:02 PM	1 : 40
2	7:05	0 : 57	7:07	1 : 11
3	7:10	0 : 53	7:12	1 : 27
4	7:15	1 : 10	7:17	1 : 13
5	7:20	1 : 09	7:22	1 : 20
6	7:25	1 : 12	7:27	1 : 52
7	7:30	1 : 36	7:32	1 : 39
8	7:35	0 : 57	7:37	1 : 33
9	7:40	1 : 06	7:42	1 : 56
10	7:45	1 : 02	7:47	1 : 16
11	7:50	0 : 47	7:52	1 : 36
12	7:55	1 : 03	7:57	1 : 24
13	8:00	0 : 53	8:02	1 : 21
14	8:05	0 : 48	8:07	2 : 35
15	8:10	0 : 49	8:12	2 : 17

EXHIBIT A-6

VALET ROUTE TEST RUN 85TH PERCENTILE AND AVERAGE TIMES

LOCATION: 250-260 N. CANON DRIVE

RUN	DELIVERY (SECONDS)	RETRIEVAL (SECONDS)
1	34	52
2	41	56
3	45	61
4	46	63
5	47	67
6	48	67
7	49	70
8	50	71
9	50	71
10	53	72
11	53	73
12	53	73
13	57	75
14	57	75
15	58	76
16	62	80
17	62	80
18	63	81
19	64	84
20	66	87
21	66	87
22	67	90
23	69	90
24	70	91
25	71	93
26	72	94
27	74	96
28	75	96
29	76	99
30	76	100
31	77	104
32	77	106
33	77	107
34	78	108
35	80	109
36	81	110
37	81	110
38	82	111
39	82	112
40	84	116
41	87	116
42	88	137
43	89	137
44	90	146
45	96	155
85TH PERCENTILE TIME:	82.0	111.4
AVERAGE TIME:	67.2	92.3

EXHIBIT A-7

IL PASTAIO VALET DROP-OFF

Valet Parking Survey
Il Pastaio, Beverly Hills, CA
Saturday, June, 4, 2016
19:00-20:30

	Valet Drop Off - Patrons drop off their vehicles with Valet staff									
	Drop Off at Valet		Departed Valet		Parked		Location Parked	Elapsed Time		
Vehicle	Plate	Time	Plate	Time	Plate	Time		Drop Off to Depart	Depart to Park	Drop Off to Park
1	Y441	19:07:58	Y441	19:08:29	Y441	19:10:45	Alley	0:00:31	0:02:16	0:02:47
2	D705	19:11:37	D705	19:13:27	D705	19:15:52	Garage - Brighton	0:01:50	0:02:25	0:04:15
3	BLKLINC	19:25:24	BLKLINC	19:26:13	BLKLINC	19:27:54	Alley	0:00:49	0:01:41	0:02:30
4	V003	19:50:11	V003	19:50:59	V003	19:52:15	Alley	0:00:48	0:01:16	0:02:04
5	K351	19:51:13	K351	19:51:39	K351	19:53:40	Alley	0:00:26	0:02:01	0:02:27
6	72A0	20:00:57	72A0	20:01:26	72A0	20:02:25	Alley	0:00:29	0:00:59	0:01:28
7	V748	20:01:08	V748	20:01:56	V748	20:04:40	Alley	0:00:48	0:02:44	0:03:32
8	Z110	20:03:18	Z110	20:03:47	Z110	20:05:09	Alley	0:00:29	0:01:22	0:01:51
9	P831	20:23:18	P831	20:23:48	P831	20:26:03	Alley	0:00:30	0:02:15	0:02:45
10	G279	20:26:16	G279	20:26:50	G279	20:27:42	Alley	0:00:34	0:00:52	0:01:26
							AVERAGES	**0:00:43**	**0:01:47**	**0:02:31**

EXHIBIT A-8

IL PASTAIO VALET PICK-UP

Valet Parking Survey
Il Pastaio, Beverly Hills, CA
Saturday, June, 4, 2016
19:00-20:30

	Valet Pick Up - Valets retrieve vehicles for departing patrons										Valet time in Garage		
	Picked Up by Valet		Valet returned		Vehicle Departed		Location Parked	Elapsed Time					
Vehicle	Plate	Time	Plate	Time	Plate	Time		Pick up to Return	Return to Depart	Pick up to Depart	Time Entered Garage	Time Exited Garage	Elapsed Time in Garage
1	Y393	19:10:26	Y393	19:10:44	Y393	19:10:44	Alley	0:00:18	0:00:00	0:00:18			
2	0T17	19:15:46	0T17	19:16:28	0T17	19:16:28	Alley	0:00:42	0:00:00	0:00:42			
3	L256	19:31:29	L256	19:32:15	L256	19:32:15	Alley	0:00:46	0:00:00	0:00:46			
4	1QHL	19:36:15	1QHL	19:36:17	1QHL	19:36:17	Garage - Brighton	0:00:02	0:00:00	0:00:02			
5	3ASX	19:36:49	3ASX	19:37:13	3ASX	19:37:13	Garage - Brighton	0:00:24	0:00:00	0:00:24	19:34:51	19:36:49	0:01:58
6	D762	19:38:04	D762	19:39:14	D762	19:39:14	Alley	0:01:10	0:00:00	0:01:10			
7	X478	19:42:36	X478	19:43:18	X478	19:43:18	Alley	0:00:42	0:00:00	0:00:42			
8	G982	19:45:57	G982	19:46:10	G982	19:46:10	Garage - Brighton	0:00:13	0:00:00	0:00:13	19:44:15	19:45:57	0:01:42
9	C573	19:46:22	C573	19:46:48	C573	19:46:48	Garage - Brighton	0:00:26	0:00:00	0:00:26	19:44:16	19:46:22	0:02:06
10	S022	19:47:43	S022	19:49:07	S022	19:49:07	Alley	0:01:24	0:00:00	0:01:24			
11	B776	19:56:03	B776	19:56:35	B776	19:56:35	Alley	0:00:32	0:00:00	0:00:32			
12	D705	19:56:21	D705	19:56:41	D705	19:56:41	Garage - Brighton	0:00:20	0:00:00	0:00:20	19:54:30	19:56:21	0:01:51
13	G730	19:57:09	G730	19:57:11	G730	19:57:11	Garage - Brighton	0:00:02	0:00:00	0:00:02	19:55:33	19:57:09	0:01:36
14	C053	20:06:48	C053	20:07:51	C053	20:07:51	Alley	0:01:03	0:00:00	0:01:03			
15	B482	20:09:33	B482	20:10:10	B482	20:10:10	Alley	0:00:37	0:00:00	0:00:37			
16	BENTLY	20:14:06	BENTLY	20:14:51	BENTLY	20:14:51	Alley	0:00:45	0:00:00	0:00:45			
17	BLKLINC	20:27:43	BLKLINC	20:28:53	BLKLINC	20:28:53	Alley	0:01:10	0:00:00	0:01:10			
							AVERAGES	0:00:37	0:00:00	0:00:37		AVERAGE	0:01:51

APPENDIX B

MANUAL AND AUTOMATIC 24-HOUR MACHINE TRAFFIC COUNT DATA

Counts Unlimited
PO Box 1178
Corona, CA 92878
(951) 268-6268

City of Beverly Hills
N/S: Canon Drive
E/W: Dayton Way
Weather: Clear

File Name : BVHCADAMD
Site Code :
Start Date : 4/13/2016
Page No : 1

Groups Printed- Total Volume

	Canon Drive Southbound				Dayton Way Westbound				Canon Drive Northbound				Dayton Way Eastbound				
Start Time	Left	Thru	Right	App. Total	Left	Thru	Right	App. Total	Left	Thru	Right	App. Total	Left	Thru	Right	App. Total	Int. Total
11:30 AM	20	55	0	75	0	0	0	0	0	56	17	73	17	50	20	87	235
11:45 AM	19	85	0	104	0	0	0	0	0	62	17	79	32	50	19	101	284
Total	39	140	0	179	0	0	0	0	0	118	34	152	49	100	39	188	519
12:00 PM	25	69	0	94	0	0	0	0	0	54	22	76	19	56	26	101	271
12:15 PM	14	75	0	89	0	0	0	0	0	52	23	75	25	67	22	114	278
12:30 PM	16	60	0	76	0	0	0	0	0	56	19	75	25	59	21	105	256
12:45 PM	22	89	0	111	0	0	0	0	0	50	22	72	18	71	27	116	299
Total	77	293	0	370	0	0	0	0	0	212	86	298	87	253	96	436	1104
01:00 PM	22	79	0	101	0	0	0	0	0	53	19	72	23	69	30	122	295
01:15 PM	19	84	0	103	0	0	0	0	0	76	20	96	19	56	38	113	312
01:30 PM	22	82	0	104	0	0	0	0	0	65	18	83	22	61	20	103	290
01:45 PM	27	66	0	93	0	0	0	0	0	58	14	72	22	60	23	105	270
Total	90	311	0	401	0	0	0	0	0	252	71	323	86	246	111	443	1167
Grand Total	206	744	0	950	0	0	0	0	0	582	191	773	222	599	246	1067	2790
Apprch %	21.7	78.3	0		0	0	0		0	75.3	24.7		20.8	56.1	23.1		
Total %	7.4	26.7	0	34.1	0	0	0	0	0	20.9	6.8	27.7	8	21.5	8.8	38.2	

	Canon Drive Southbound				Dayton Way Westbound				Canon Drive Northbound				Dayton Way Eastbound				
Start Time	Left	Thru	Right	App. Total	Left	Thru	Right	App. Total	Left	Thru	Right	App. Total	Left	Thru	Right	App. Total	Int. Total
Peak Hour Analysis From 11:30 AM to 01:45 PM - Peak 1 of 1																	
Peak Hour for Entire Intersection Begins at 12:45 PM																	
12:45 PM	**22**	**89**	0	**111**	0	0	0	0	0	50	**22**	72	18	**71**	27	116	299
01:00 PM	22	79	0	101	0	0	0	0	0	53	19	72	**23**	69	30	**122**	295
01:15 PM	19	84	0	103	0	0	0	0	0	**76**	20	**96**	19	56	**38**	113	**312**
01:30 PM	22	82	0	104	0	0	0	0	0	65	18	83	22	61	20	103	290
Total Volume	85	334	0	419	0	0	0	0	0	244	79	323	82	257	115	454	1196
% App. Total	20.3	79.7	0		0	0	0		0	75.5	24.5		18.1	56.6	25.3		
PHF	.966	.938	.000	.944	.000	.000	.000	.000	.000	.803	.898	.841	.891	.905	.757	.930	.958

Counts Unlimited
PO Box 1178
Corona, CA 92878
(951) 268-6268

City of Beverly Hills
N/S: Canon Drive
E/W: Dayton Way
Weather: Clear

File Name : BVHCADAMD
Site Code :
Start Date : 4/13/2016
Page No : 2

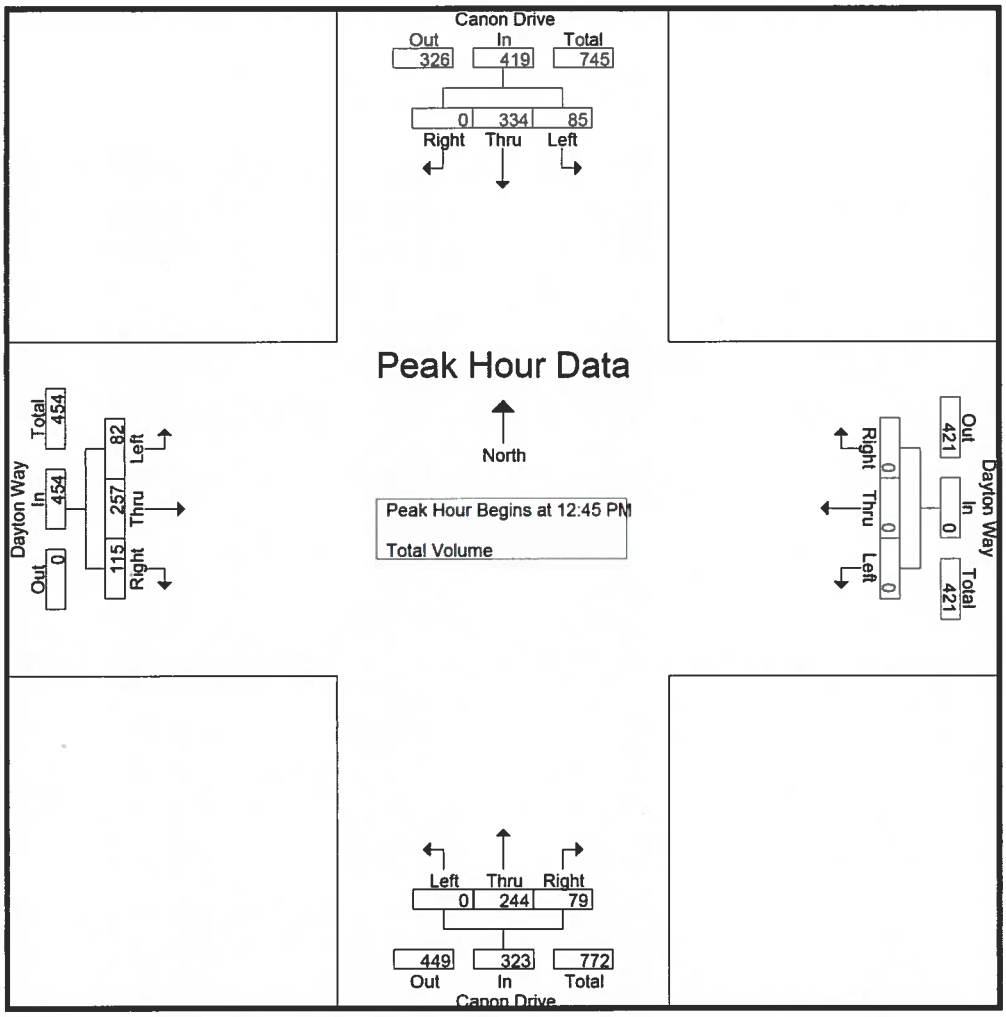

Peak Hour Analysis From 11:30 AM to 01:45 PM - Peak 1 of 1

Peak Hour for Each Approach Begins at:

	12:45 PM				11:30 AM				12:45 PM				12:15 PM			
+0 mins.	**22**	**89**	0	**111**	0	0	0	0	0	50	**22**	72	**25**	67	22	114
+15 mins.	22	79	0	101	0	0	0	0	0	53	19	72	25	59	21	105
+30 mins.	19	84	0	103	0	0	0	0	0	**76**	20	**96**	18	**71**	27	116
+45 mins.	22	82	0	104	0	0	0	0	0	65	18	83	23	69	**30**	**122**
Total Volume	85	334	0	419	0	0	0	0	0	244	79	323	91	266	100	457
% App. Total	20.3	79.7	0		0	0	0		0	75.5	24.5		19.9	58.2	21.9	
PHF	.966	.938	.000	.944	.000	.000	.000	.000	.000	.803	.898	.841	.910	.937	.833	.936

Counts Unlimited
PO Box 1178
Corona, CA 92878
(951) 268-6268

City of Beverly Hills
N/S: Canon Drive
E/W: Dayton Way
Weather: Clear

File Name : BVHCADAPM
Site Code :
Start Date : 4/13/2016
Page No : 1

Groups Printed- Total Volume

	Canon Drive Southbound				Dayton Way Westbound				Canon Drive Northbound				Dayton Way Eastbound				
Start Time	Left	Thru	Right	App. Total	Left	Thru	Right	App. Total	Left	Thru	Right	App. Total	Left	Thru	Right	App. Total	Int. Total
04:30 PM	18	81	0	99	0	0	0	0	0	75	19	94	19	107	14	140	333
04:45 PM	26	63	0	89	0	0	0	0	0	55	19	74	18	101	29	148	311
Total	44	144	0	188	0	0	0	0	0	130	38	168	37	208	43	288	644
05:00 PM	22	70	0	92	0	0	0	0	0	72	14	86	23	120	20	163	341
05:15 PM	21	69	0	90	0	0	0	0	0	56	20	76	28	120	25	173	339
05:30 PM	19	73	0	92	0	0	0	0	0	62	14	76	27	127	18	172	340
05:45 PM	21	75	0	96	0	0	0	0	0	61	22	83	37	107	22	166	345
Total	83	287	0	370	0	0	0	0	0	251	70	321	115	474	85	674	1365
06:00 PM	22	72	0	94	0	0	0	0	0	58	25	83	30	136	25	191	368
06:15 PM	17	83	0	100	0	0	0	0	0	73	25	98	35	143	30	208	406
06:30 PM	23	75	0	98	0	0	0	0	0	79	30	109	33	143	34	210	417
06:45 PM	20	90	0	110	0	0	0	0	0	77	35	112	24	118	26	168	390
Total	82	320	0	402	0	0	0	0	0	287	115	402	122	540	115	777	1581
07:00 PM	14	80	0	94	0	0	0	0	0	55	19	74	30	100	22	152	320
07:15 PM	19	72	0	91	0	0	0	0	0	61	30	91	23	94	28	145	327
07:30 PM	19	78	0	97	0	0	0	0	0	54	30	84	26	73	26	125	306
07:45 PM	7	72	0	79	0	0	0	0	0	56	25	81	21	46	22	89	249
Total	59	302	0	361	0	0	0	0	0	226	104	330	100	313	98	511	1202
Grand Total	268	1053	0	1321	0	0	0	0	0	894	327	1221	374	1535	341	2250	4792
Apprch %	20.3	79.7	0		0	0	0		0	73.2	26.8		16.6	68.2	15.2		
Total %	5.6	22	0	27.6	0	0	0	0	0	18.7	6.8	25.5	7.8	32	7.1	47	

	Canon Drive Southbound				Dayton Way Westbound				Canon Drive Northbound				Dayton Way Eastbound				
Start Time	Left	Thru	Right	App. Total	Left	Thru	Right	App. Total	Left	Thru	Right	App. Total	Left	Thru	Right	App. Total	Int. Total
Peak Hour Analysis From 04:30 PM to 07:45 PM - Peak 1 of 1																	
Peak Hour for Entire Intersection Begins at 06:00 PM																	
06:00 PM	22	72	0	94	0	0	0	0	0	58	25	83	30	136	25	191	368
06:15 PM	17	83	0	100	0	0	0	0	0	73	25	98	**35**	**143**	30	208	406
06:30 PM	**23**	75	0	98	0	0	0	0	0	**79**	30	109	33	143	**34**	**210**	**417**
06:45 PM	20	**90**	0	**110**	0	0	0	0	0	77	**35**	**112**	24	118	26	168	390
Total Volume	82	320	0	402	0	0	0	0	0	287	115	402	122	540	115	777	1581
% App. Total	20.4	79.6	0		0	0	0		0	71.4	28.6		15.7	69.5	14.8		
PHF	.891	.889	.000	.914	.000	.000	.000	.000	.000	.908	.821	.897	.871	.944	.846	.925	.948

Counts Unlimited
PO Box 1178
Corona, CA 92878
(951) 268-6268

City of Beverly Hills
N/S: Canon Drive
E/W: Dayton Way
Weather: Clear

File Name : BVHCADAPM
Site Code :
Start Date : 4/13/2016
Page No : 2

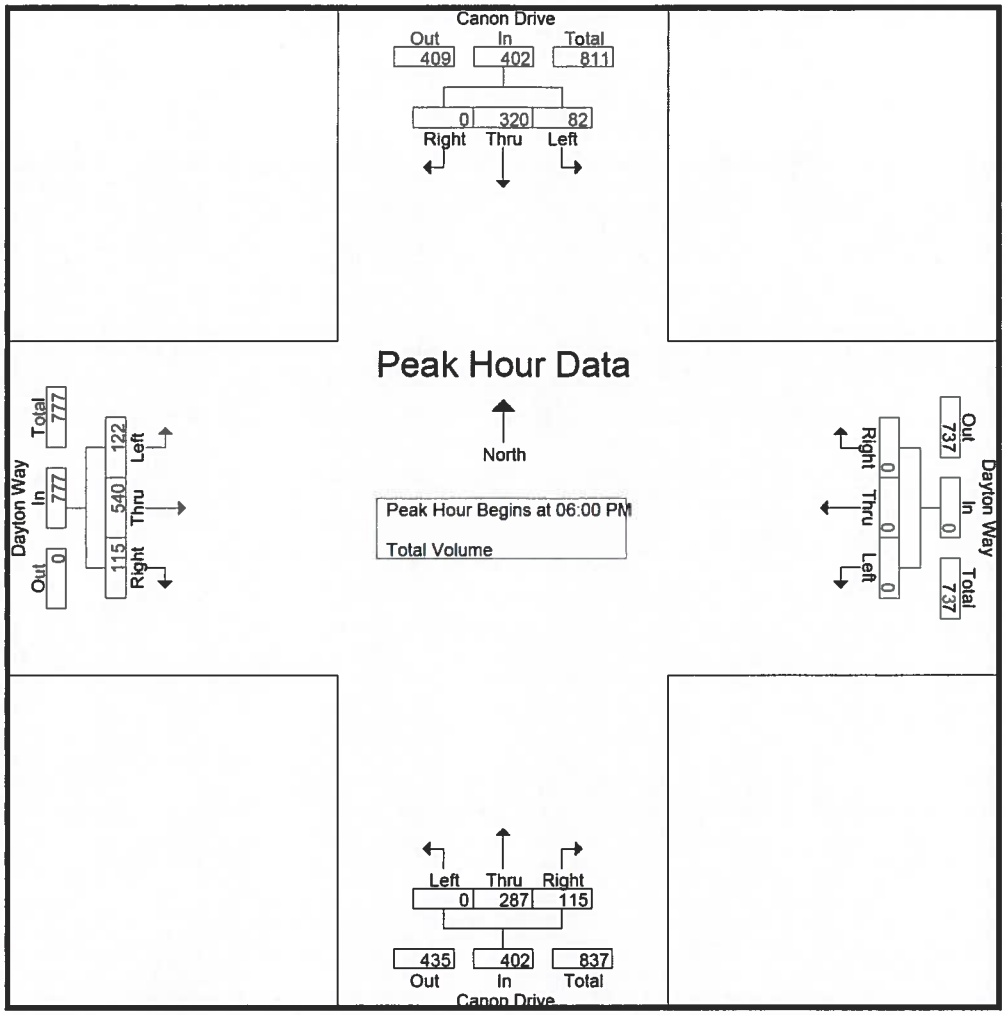

Peak Hour Analysis From 04:30 PM to 07:45 PM - Peak 1 of 1
Peak Hour for Each Approach Begins at:

	06:00 PM				04:30 PM				06:00 PM				06:00 PM			
+0 mins.	22	72	0	94	0	0	0	0	0	58	25	83	30	136	25	191
+15 mins.	17	83	0	100	0	0	0	0	0	73	25	98	**35**	**143**	30	208
+30 mins.	**23**	75	0	98	0	0	0	0	0	**79**	30	109	33	143	**34**	**210**
+45 mins.	20	**90**	0	**110**	0	0	0	0	0	77	**35**	**112**	24	118	26	168
Total Volume	82	320	0	402	0	0	0	0	0	287	115	402	122	540	115	777
% App. Total	20.4	79.6	0		0	0	0		0	71.4	28.6		15.7	69.5	14.8	
PHF	.891	.889	.000	.914	.000	.000	.000	.000	.000	.908	.821	.897	.871	.944	.846	.925

Location: Beverly Hills
N/S: Canon Drive
E/W: Dayton Way

Date: 4/13/2016
Day: Wednesday

PEDESTRIANS

	North Leg Canon Drive	Southwest to North East Pedestrians	East Leg Dayton Way	South Leg Canon Drive	Southeast to Northwest Pedestrians	West Leg Dayton Way	TOTAL
11:30 AM	14	5	17	12	9	17	74
11:45 AM	15	11	18	19	9	39	111
12:00 PM	28	11	25	18	7	38	127
12:15 PM	31	11	32	28	12	28	142
12:30 PM	27	14	33	44	16	35	169
12:45 PM	40	23	31	30	21	42	187
1:00 PM	32	16	30	33	19	53	183
1:15 PM	52	18	34	51	17	40	212
1:30 PM	23	15	36	38	10	34	156
1:45 PM	32	8	26	29	13	42	150
TOTAL VOLUMES	294	132	282	302	133	368	1511

	North Leg Canon Drive	Southwest to North East Pedestrians	East Leg Dayton Way	South Leg Canon Drive	Southeast to Northwest Pedestrians	West Leg Dayton Way	TOTAL
4:30 PM	24	7	33	25	13	33	135
4:45 PM	35	5	28	22	14	28	132
5:00 PM	33	17	38	25	7	29	149
5:15 PM	38	6	20	16	17	25	122
5:30 PM	26	8	15	9	12	20	90
5:45 PM	27	9	16	8	17	29	106
6:00 PM	33	8	18	16	7	23	105
6:15 PM	33	17	18	19	6	39	132
6:30 PM	33	4	17	28	16	36	134
6:45 PM	33	2	19	13	8	35	110
7:00 PM	31	10	15	18	10	33	117
7:15 PM	16	10	17	13	0	18	74
7:30 PM	14	2	22	19	2	26	85
7:45 PM	24	0	21	7	0	33	85
TOTAL VOLUMES	400	105	297	238	129	407	1576

Location: Beverly Hills
N/S: Canon Drive
E/W: Dayton Way

Date: 4/13/2016
Day: Wednesday

BICYCLES

	North Leg Canon Drive	Southwest to North East Bicycles	East Leg Dayton Way	South Leg Canon Drive	Southeast to Northwest Bicycles	West Leg Dayton Way	TOTAL
11:30 AM	0	0	1	0	1	2	4
11:45 AM	1	1	1	1	0	0	4
12:00 PM	2	0	0	1	1	0	4
12:15 PM	2	1	0	0	0	0	3
12:30 PM	0	0	1	3	0	1	5
12:45 PM	0	1	1	0	0	2	4
1:00 PM	0	0	0	2	0	1	3
1:15 PM	0	0	0	0	0	2	2
1:30 PM	1	0	2	0	0	0	3
1:45 PM	0	0	0	1	0	0	1
TOTAL VOLUMES	6	3	6	8	2	8	33

	North Leg Canon Drive	Southwest to North East Bicycles	East Leg Dayton Way	South Leg Canon Drive	Southeast to Northwest Bicycles	West Leg Dayton Way	TOTAL
4:30 PM	0	0	0	0	0	0	0
4:45 PM	0	0	1	1	0	0	2
5:00 PM	0	0	1	0	0	0	1
5:15 PM	1	0	1	0	0	0	2
5:30 PM	1	0	0	0	0	1	2
5:45 PM	0	0	0	1	0	0	1
6:00 PM	0	0	0	0	0	0	0
6:15 PM	0	0	0	0	0	0	0
6:30 PM	0	0	0	0	0	0	0
6:45 PM	1	0	0	1	0	0	2
7:00 PM	0	0	0	0	0	0	0
7:15 PM	0	0	1	1	0	0	2
7:30 PM	0	0	0	2	0	1	3
7:45 PM	0	0	0	0	0	0	0
TOTAL VOLUMES	3	0	4	6	0	2	15

Counts Unlimited
PO Box 1178
Corona, CA 92878
(951) 268-6268

City of Beverly Hills
N/S: Crescent Drive
E/W: Dayton Way
Weather: Clear

File Name : BVHCRDAMD
Site Code :
Start Date : 4/13/2016
Page No : 1

Groups Printed- Total Volume

	Crescent Drive Southbound				Dayton Way Westbound				Crescent Drive Northbound				Dayton Way Eastbound				
Start Time	Left	Thru	Right	App. Total	Left	Thru	Right	App. Total	Left	Thru	Right	App. Total	Left	Thru	Right	App. Total	Int. Total
11:30 AM	2	88	1	91	8	0	9	17	0	73	7	80	21	22	19	62	250
11:45 AM	12	72	0	84	8	0	13	21	0	83	4	87	21	23	32	76	268
Total	14	160	1	175	16	0	22	38	0	156	11	167	42	45	51	138	518
12:00 PM	3	72	1	76	9	0	3	12	0	78	3	81	24	30	24	78	247
12:15 PM	2	90	0	92	7	0	11	18	0	73	5	78	41	38	22	101	289
12:30 PM	6	81	0	87	14	0	11	25	0	68	5	73	28	24	31	83	268
12:45 PM	4	89	0	93	11	0	10	21	0	91	7	98	39	41	20	100	312
Total	15	332	1	348	41	0	35	76	0	310	20	330	132	133	97	362	1116
01:00 PM	4	101	0	105	8	0	18	26	0	89	12	101	33	37	29	99	331
01:15 PM	5	92	0	97	7	0	15	22	0	81	7	88	34	35	31	100	307
01:30 PM	9	88	0	97	7	0	12	19	0	75	4	79	33	30	30	93	288
01:45 PM	8	67	0	75	12	0	6	18	0	81	5	86	28	34	27	89	268
Total	26	348	0	374	34	0	51	85	0	326	28	354	128	136	117	381	1194
Grand Total	55	840	2	897	91	0	108	199	0	792	59	851	302	314	265	881	2828
Apprch %	6.1	93.6	0.2		45.7	0	54.3		0	93.1	6.9		34.3	35.6	30.1		
Total %	1.9	29.7	0.1	31.7	3.2	0	3.8	7	0	28	2.1	30.1	10.7	11.1	9.4	31.2	

	Crescent Drive Southbound				Dayton Way Westbound				Crescent Drive Northbound				Dayton Way Eastbound				
Start Time	Left	Thru	Right	App. Total	Left	Thru	Right	App. Total	Left	Thru	Right	App. Total	Left	Thru	Right	App. Total	Int. Total
Peak Hour Analysis From 11:30 AM to 01:45 PM - Peak 1 of 1																	
Peak Hour for Entire Intersection Begins at 12:45 PM																	
12:45 PM	4	89	0	93	**11**	0	10	21	0	**91**	7	98	**39**	**41**	20	**100**	312
01:00 PM	4	**101**	0	**105**	8	0	**18**	**26**	0	89	**12**	**101**	33	37	29	99	**331**
01:15 PM	5	92	0	97	7	0	15	22	0	81	7	88	34	35	**31**	100	307
01:30 PM	**9**	88	0	97	7	0	12	19	0	75	4	79	33	30	30	93	288
Total Volume	22	370	0	392	33	0	55	88	0	336	30	366	139	143	110	392	1238
% App. Total	5.6	94.4	0		37.5	0	62.5		0	91.8	8.2		35.5	36.5	28.1		
PHF	.611	.916	.000	.933	.750	.000	.764	.846	.000	.923	.625	.906	.891	.872	.887	.980	.935

Counts Unlimited
PO Box 1178
Corona, CA 92878
(951) 268-6268

City of Beverly Hills
N/S: Crescent Drive
E/W: Dayton Way
Weather: Clear

File Name : BVHCRDAMD
Site Code :
Start Date : 4/13/2016
Page No : 2

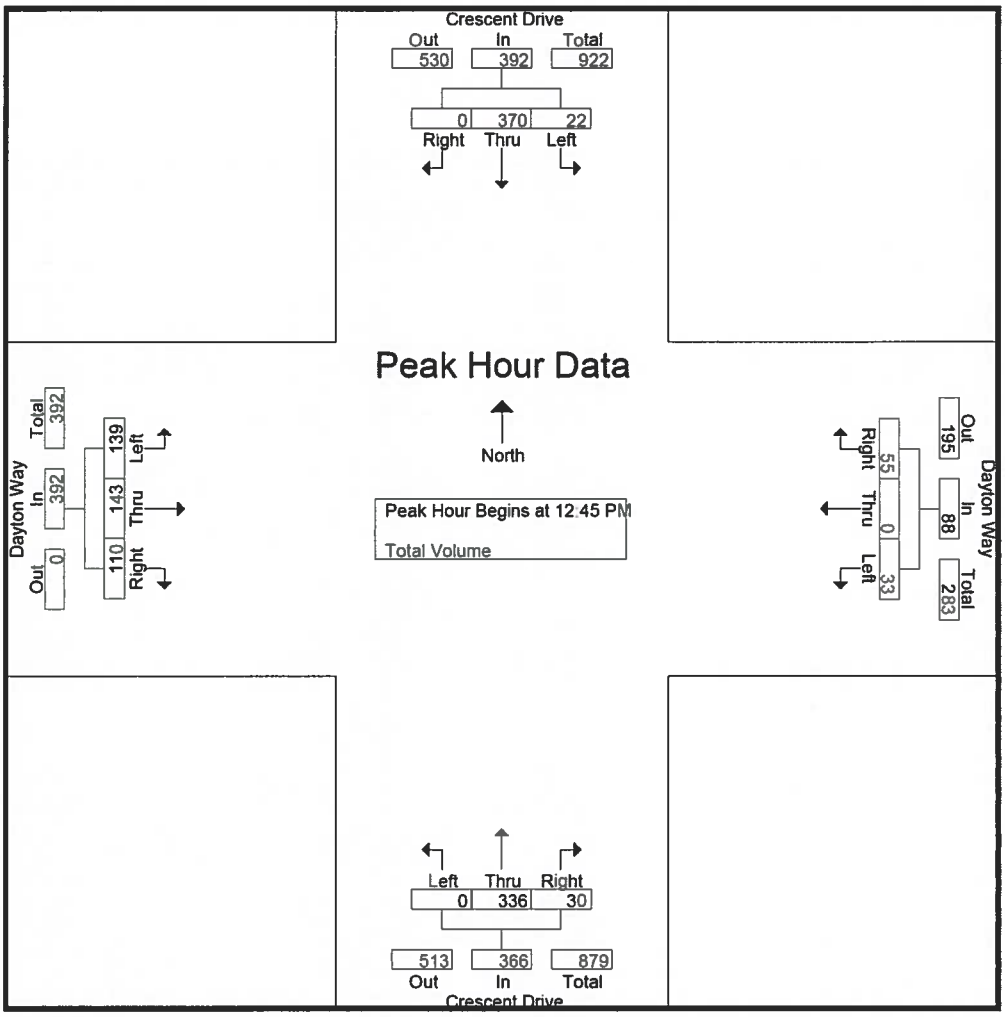

Peak Hour Analysis From 11:30 AM to 01:45 PM - Peak 1 of 1

Peak Hour for Each Approach Begins at:

	12:45 PM				12:30 PM				12:45 PM				12:45 PM			
+0 mins.	4	89	0	93	**14**	0	11	25	0	**91**	7	98	**39**	**41**	20	**100**
+15 mins.	4	**101**	0	**105**	11	0	10	21	0	89	**12**	**101**	33	37	29	99
+30 mins.	5	92	0	97	8	0	**18**	**26**	0	81	7	88	34	35	**31**	100
+45 mins.	**9**	88	0	97	7	0	15	22	0	75	4	79	33	30	30	93
Total Volume	22	370	0	392	40	0	54	94	0	336	30	366	139	143	110	392
% App. Total	5.6	94.4	0		42.6	0	57.4		0	91.8	8.2		35.5	36.5	28.1	
PHF	.611	.916	.000	.933	.714	.000	.750	.904	.000	.923	.625	.906	.891	.872	.887	.980

Counts Unlimited
PO Box 1178
Corona, CA 92878
(951) 268-6268

City of Beverly Hills
N/S: Crescent Drive
E/W: Dayton Way
Weather: Clear

File Name : BVHCRDAPM
Site Code :
Start Date : 4/13/2016
Page No : 1

Groups Printed- Total Volume

	Crescent Drive Southbound				Dayton Way Westbound				Crescent Drive Northbound				Dayton Way Eastbound				
Start Time	Left	Thru	Right	App. Total	Left	Thru	Right	App. Total	Left	Thru	Right	App. Total	Left	Thru	Right	App. Total	Int. Total
04:30 PM	7	86	0	93	11	0	10	21	0	107	9	116	42	63	36	141	371
04:45 PM	10	113	0	123	6	0	11	17	0	92	8	100	44	66	31	141	381
Total	17	199	0	216	17	0	21	38	0	199	17	216	86	129	67	282	752
05:00 PM	17	116	0	133	10	0	14	24	0	110	11	121	34	91	32	157	435
05:15 PM	4	136	0	140	6	0	7	13	0	89	17	106	32	101	14	147	406
05:30 PM	8	100	0	108	10	0	9	19	0	81	15	96	26	110	23	159	382
05:45 PM	11	93	0	104	2	0	5	7	0	92	7	99	35	77	41	153	363
Total	40	445	0	485	28	0	35	63	0	372	50	422	127	379	110	616	1586
06:00 PM	10	107	0	117	9	0	9	18	0	119	11	130	43	99	49	191	456
06:15 PM	20	105	0	125	10	0	9	19	0	116	12	128	44	109	40	193	465
06:30 PM	10	90	0	100	8	0	6	14	0	97	7	104	35	108	34	177	395
06:45 PM	12	83	0	95	6	0	7	13	0	89	11	100	34	82	40	156	364
Total	52	385	0	437	33	0	31	64	0	421	41	462	156	398	163	717	1680
07:00 PM	5	70	0	75	8	0	6	14	0	62	4	66	28	78	26	132	287
07:15 PM	6	86	0	92	8	0	10	18	0	97	8	105	21	95	35	151	366
07:30 PM	4	69	0	73	3	0	3	6	0	61	8	69	25	61	35	121	269
07:45 PM	2	65	0	67	2	0	9	11	0	41	7	48	17	29	29	75	201
Total	17	290	0	307	21	0	28	49	0	261	27	288	91	263	125	479	1123
Grand Total	126	1319	0	1445	99	0	115	214	0	1253	135	1388	460	1169	465	2094	5141
Apprch %	8.7	91.3	0		46.3	0	53.7		0	90.3	9.7		22	55.8	22.2		
Total %	2.5	25.7	0	28.1	1.9	0	2.2	4.2	0	24.4	2.6	27	8.9	22.7	9	40.7	

	Crescent Drive Southbound				Dayton Way Westbound				Crescent Drive Northbound				Dayton Way Eastbound				
Start Time	Left	Thru	Right	App. Total	Left	Thru	Right	App. Total	Left	Thru	Right	App. Total	Left	Thru	Right	App. Total	Int. Total
Peak Hour Analysis From 04:30 PM to 07:45 PM - Peak 1 of 1																	
Peak Hour for Entire Intersection Begins at 06:00 PM																	
06:00 PM	10	**107**	0	117	9	0	**9**	18	0	**119**	11	**130**	43	99	**49**	191	456
06:15 PM	**20**	105	0	**125**	**10**	0	9	**19**	0	116	**12**	128	**44**	**109**	40	**193**	**465**
06:30 PM	10	90	0	100	8	0	6	14	0	97	7	104	35	108	34	177	395
06:45 PM	12	83	0	95	6	0	7	13	0	89	11	100	34	82	40	156	364
Total Volume	52	385	0	437	33	0	31	64	0	421	41	462	156	398	163	717	1680
% App. Total	11.9	88.1	0		51.6	0	48.4		0	91.1	8.9		21.8	55.5	22.7		
PHF	.650	.900	.000	.874	.825	.000	.861	.842	.000	.884	.854	.888	.886	.913	.832	.929	.903

Counts Unlimited
PO Box 1178
Corona, CA 92878
(951) 268-6268

City of Beverly Hills
N/S: Crescent Drive
E/W: Dayton Way
Weather: Clear

File Name : BVHCRDAPM
Site Code :
Start Date : 4/13/2016
Page No : 2

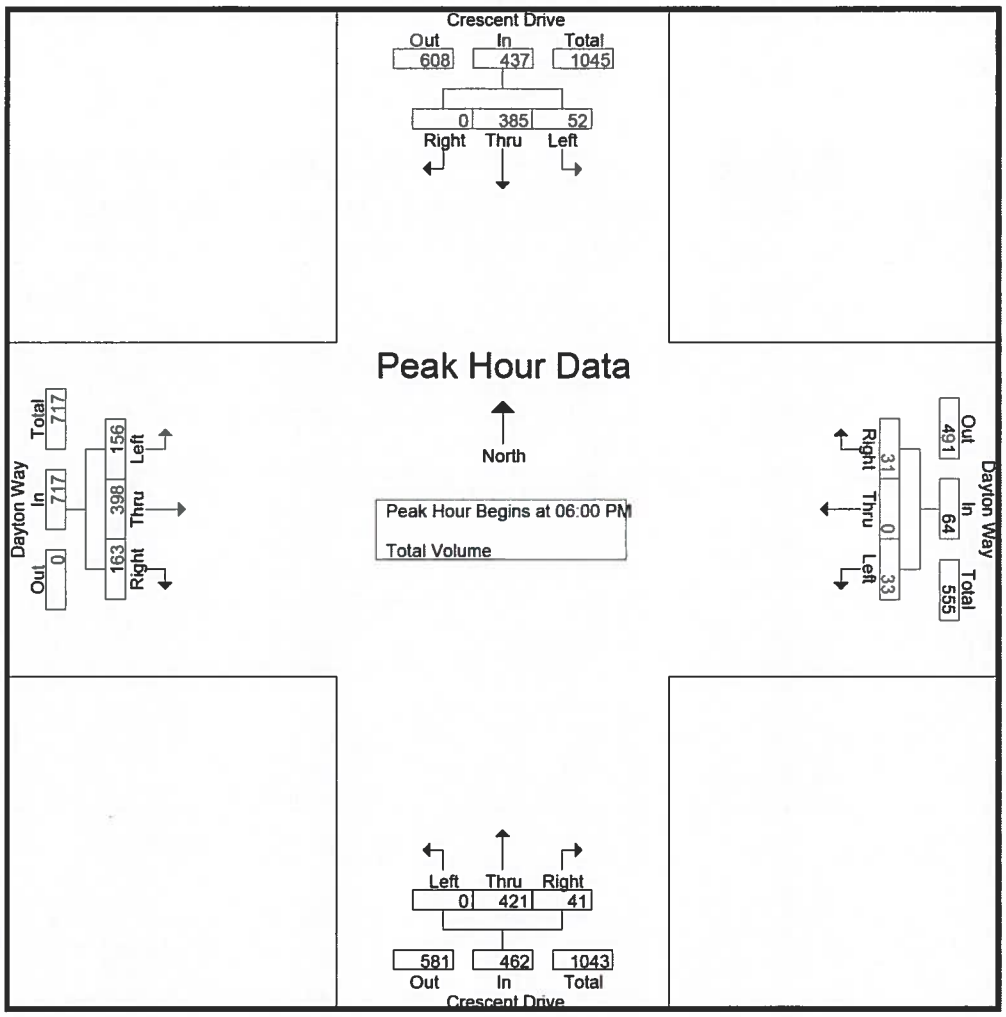

Peak Hour Analysis From 04:30 PM to 07:45 PM - Peak 1 of 1
Peak Hour for Each Approach Begins at:

	04:45 PM				04:30 PM				06:00 PM				06:00 PM			
+0 mins.	10	113	0	123	**11**	0	10	21	0	**119**	11	**130**	43	99	**49**	191
+15 mins.	**17**	116	0	133	6	0	11	17	0	116	**12**	128	**44**	**109**	40	**193**
+30 mins.	4	**136**	0	**140**	10	0	**14**	**24**	0	97	7	104	35	108	34	177
+45 mins.	8	100	0	108	6	0	7	13	0	89	11	100	34	82	40	156
Total Volume	39	465	0	504	33	0	42	75	0	421	41	462	156	398	163	717
% App. Total	7.7	92.3	0		44	0	56		0	91.1	8.9		21.8	55.5	22.7	
PHF	.574	.855	.000	.900	.750	.000	.750	.781	.000	.884	.854	.888	.886	.913	.832	.929

Location: Beverly Hills
N/S: Crescent Drive
E/W: Dayton Way

Date: 4/13/2016
Day: Wednesday

PEDESTRIANS

	North Leg Crescent Drive	East Leg Dayton Way	South Leg Crescent Drive	West Leg Dayton Way	TOTAL
11:30 AM	6	1	8	19	34
11:45 AM	11	6	15	23	55
12:00 PM	20	3	16	26	65
12:15 PM	18	5	9	27	59
12:30 PM	8	2	17	40	67
12:45 PM	9	7	12	36	64
1:00 PM	22	7	8	51	88
1:15 PM	18	0	12	49	79
1:30 PM	12	5	14	44	75
1:45 PM	17	7	13	29	66
TOTAL VOLUMES:	141	43	124	344	652

	North Leg Crescent Drive	East Leg Dayton Way	South Leg Crescent Drive	West Leg Dayton Way	TOTAL
4:30 PM	13	2	11	33	59
4:45 PM	5	1	15	17	38
5:00 PM	18	10	13	24	65
5:15 PM	4	0	2	12	18
5:30 PM	9	3	4	17	33
5:45 PM	5	3	8	21	37
6:00 PM	9	3	10	18	40
6:15 PM	9	4	12	9	34
6:30 PM	6	1	6	8	21
6:45 PM	4	1	8	6	19
7:00 PM	4	1	1	7	13
7:15 PM	9	6	8	10	33
7:30 PM	2	1	7	8	18
7:45 PM	5	1	5	14	25
TOTAL VOLUMES:	102	37	110	204	453

Location: Beverly Hills
N/S: Crescent Drive
E/W: Dayton Way

Date: 4/13/2016
Day: Wednesday

BICYCLES

	North Leg Crescent Drive	East Leg Dayton Way	South Leg Crescent Drive	West Leg Dayton Way	TOTAL
11:30 AM	0	1	0	1	2
11:45 AM	0	3	1	0	4
12:00 PM	2	0	2	0	4
12:15 PM	2	1	0	1	4
12:30 PM	2	0	0	1	3
12:45 PM	2	1	0	3	6
1:00 PM	1	1	1	1	4
1:15 PM	0	0	0	0	0
1:30 PM	1	3	0	1	5
1:45 PM	2	0	0	3	5
TOTAL VOLUMES:	12	10	4	11	37

	North Leg Crescent Drive	East Leg Dayton Way	South Leg Crescent Drive	West Leg Dayton Way	TOTAL
4:30 PM	0	1	0	1	2
4:45 PM	0	0	0	2	2
5:00 PM	1	0	0	0	1
5:15 PM	1	0	0	0	1
5:30 PM	0	0	0	0	0
5:45 PM	0	0	1	0	1
6:00 PM	0	0	0	1	1
6:15 PM	1	0	1	1	3
6:30 PM	0	0	2	0	2
6:45 PM	1	0	1	0	2
7:00 PM	0	1	0	0	1
7:15 PM	0	0	1	0	1
7:30 PM	0	0	0	0	0
7:45 PM	0	0	0	0	0
TOTAL VOLUMES:	4	2	6	5	17

Counts Unlimited
PO Box 1178
Corona, CA 92878
(951) 268-6268

City of Beverly Hills
N/S: Canon Drive
E/W: Clifton Way
Weather: Clear

File Name : BVHCACLMD
Site Code :
Start Date : 4/13/2016
Page No : 1

Groups Printed- Total Volume

	Canon Drive Southbound				Clifton Way Westbound				Canon Drive Northbound				Parking Garage Eastbound				
Start Time	Left	Thru	Right	App. Total	Left	Thru	Right	App. Total	Left	Thru	Right	App. Total	Left	Thru	Right	App. Total	Int. Total
11:30 AM	9	80	3	92	13	1	24	38	6	65	7	78	0	1	9	10	218
11:45 AM	9	91	7	107	9	3	34	46	9	61	10	80	3	3	7	13	246
Total	18	171	10	199	22	4	58	84	15	126	17	158	3	4	16	23	464
12:00 PM	9	88	4	101	14	2	38	54	5	53	12	70	1	4	10	15	240
12:15 PM	19	85	1	105	17	5	40	62	6	44	15	65	2	5	11	18	250
12:30 PM	11	75	3	89	21	1	41	63	7	52	12	71	1	3	6	10	233
12:45 PM	18	95	4	117	17	5	39	61	6	47	25	78	2	3	5	10	266
Total	57	343	12	412	69	13	158	240	24	196	64	284	6	15	32	53	989
01:00 PM	17	93	5	115	15	1	41	57	5	55	22	82	4	7	3	14	268
01:15 PM	14	117	1	132	14	4	44	62	11	75	14	100	1	3	10	14	308
01:30 PM	17	85	4	106	15	2	40	57	9	48	15	72	0	2	11	13	248
01:45 PM	12	98	4	114	16	5	21	42	2	63	11	76	1	3	8	12	244
Total	60	393	14	467	60	12	146	218	27	241	62	330	6	15	32	53	1068
Grand Total	135	907	36	1078	151	29	362	542	66	563	143	772	15	34	80	129	2521
Apprch %	12.5	84.1	3.3		27.9	5.4	66.8		8.5	72.9	18.5		11.6	26.4	62		
Total %	5.4	36	1.4	42.8	6	1.2	14.4	21.5	2.6	22.3	5.7	30.6	0.6	1.3	3.2	5.1	

	Canon Drive Southbound				Clifton Way Westbound				Canon Drive Northbound				Parking Garage Eastbound				
Start Time	Left	Thru	Right	App. Total	Left	Thru	Right	App. Total	Left	Thru	Right	App. Total	Left	Thru	Right	App. Total	Int. Total
Peak Hour Analysis From 11:30 AM to 01:45 PM - Peak 1 of 1																	
Peak Hour for Entire Intersection Begins at 12:45 PM																	
12:45 PM	**18**	95	4	117	**17**	**5**	39	61	6	47	**25**	78	2	3	5	10	266
01:00 PM	17	93	**5**	115	15	1	41	57	5	55	22	82	**4**	**7**	3	**14**	268
01:15 PM	14	**117**	1	**132**	14	4	**44**	**62**	**11**	**75**	14	**100**	1	3	10	14	**308**
01:30 PM	17	85	4	106	15	2	40	57	9	48	15	72	0	2	**11**	13	248
Total Volume	66	390	14	470	61	12	164	237	31	225	76	332	7	15	29	51	1090
% App. Total	14	83	3		25.7	5.1	69.2		9.3	67.8	22.9		13.7	29.4	56.9		
PHF	.917	.833	.700	.890	.897	.600	.932	.956	.705	.750	.760	.830	.438	.536	.659	.911	.885

Counts Unlimited
PO Box 1178
Corona, CA 92878
(951) 268-6268

City of Beverly Hills
N/S: Canon Drive
E/W: Clifton Way
Weather: Clear

File Name : BVHCACLMD
Site Code :
Start Date : 4/13/2016
Page No : 2

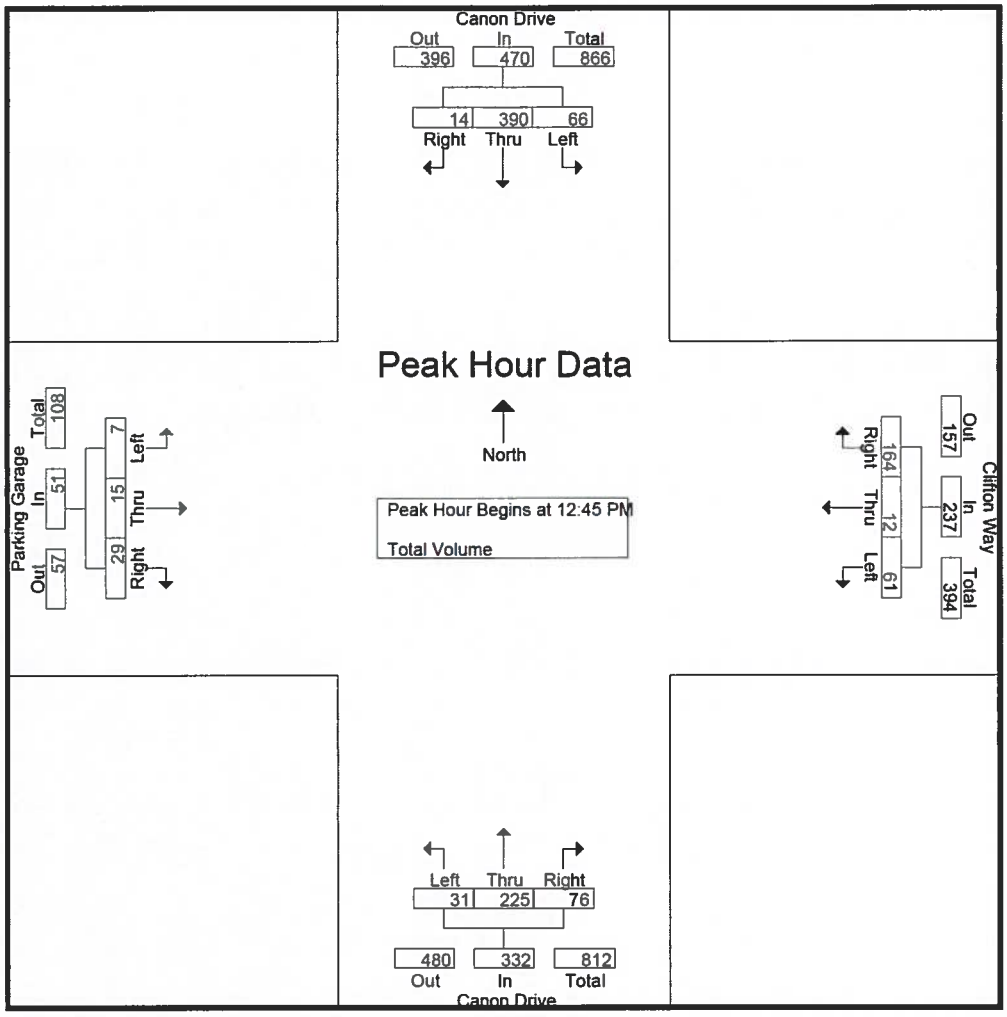

Peak Hour Analysis From 11:30 AM to 01:45 PM - Peak 1 of 1
Peak Hour for Each Approach Begins at:

	12:45 PM				12:15 PM				12:45 PM				11:30 AM			
+0 mins.	**18**	95	4	117	17	**5**	40	62	6	47	**25**	78	0	1	9	10
+15 mins.	17	93	**5**	115	**21**	1	**41**	**63**	5	55	22	82	**3**	3	7	13
+30 mins.	14	**117**	1	**132**	17	5	39	61	**11**	**75**	14	**100**	1	4	10	15
+45 mins.	17	85	4	106	15	1	41	57	9	48	15	72	2	**5**	**11**	**18**
Total Volume	66	390	14	470	70	12	161	243	31	225	76	332	6	13	37	56
% App. Total	14	83	3		28.8	4.9	66.3		9.3	67.8	22.9		10.7	23.2	66.1	
PHF	.917	.833	.700	.890	.833	.600	.982	.964	.705	.750	.760	.830	.500	.650	.841	.778

Counts Unlimited
PO Box 1178
Corona, CA 92878
(951) 268-6268

City of Beverly Hills
N/S: Canon Drive
E/W: Clifton Way
Weather: Clear

File Name : BVHCACLPM
Site Code :
Start Date : 4/13/2016
Page No : 1

Groups Printed- Total Volume

	Canon Drive Southbound				Clifton Way Westbound				Canon Drive Northbound				Parking Garage Eastbound				
Start Time	Left	Thru	Right	App. Total	Left	Thru	Right	App. Total	Left	Thru	Right	App. Total	Left	Thru	Right	App. Total	Int. Total
04:30 PM	23	99	2	124	13	1	28	42	2	55	14	71	7	3	12	22	259
04:45 PM	11	95	1	107	17	2	31	50	2	39	15	56	1	3	7	11	224
Total	34	194	3	231	30	3	59	92	4	94	29	127	8	6	19	33	483
05:00 PM	10	100	0	110	18	2	24	44	0	51	5	56	7	5	18	30	240
05:15 PM	13	98	0	111	11	0	23	34	1	41	16	58	3	6	11	20	223
05:30 PM	27	84	1	112	10	1	25	36	1	43	13	57	4	7	11	22	227
05:45 PM	15	99	1	115	5	0	32	37	2	44	9	55	9	3	11	23	230
Total	65	381	2	448	44	3	104	151	4	179	43	226	23	21	51	95	920
06:00 PM	17	100	1	118	15	0	33	48	1	57	9	67	5	9	12	26	259
06:15 PM	16	95	0	111	15	0	31	46	1	57	6	64	3	2	7	12	233
06:30 PM	18	89	0	107	14	0	32	46	0	66	15	81	6	5	13	24	258
06:45 PM	25	105	1	131	11	1	36	48	0	64	14	78	4	4	5	13	270
Total	76	389	2	467	55	1	132	188	2	244	44	290	18	20	37	75	1020
07:00 PM	15	92	0	107	8	0	22	30	1	55	16	72	4	4	6	14	223
07:15 PM	24	91	2	117	6	0	31	37	0	67	10	77	1	3	7	11	242
07:30 PM	18	97	0	115	14	1	22	37	0	53	10	63	3	4	3	10	225
07:45 PM	20	79	0	99	6	0	25	31	0	58	9	67	0	0	1	1	198
Total	77	359	2	438	34	1	100	135	1	233	45	279	8	11	17	36	888
Grand Total	252	1323	9	1584	163	8	395	566	11	750	161	922	57	58	124	239	3311
Apprch %	15.9	83.5	0.6		28.8	1.4	69.8		1.2	81.3	17.5		23.8	24.3	51.9		
Total %	7.6	40	0.3	47.8	4.9	0.2	11.9	17.1	0.3	22.7	4.9	27.8	1.7	1.8	3.7	7.2	

	Canon Drive Southbound				Clifton Way Westbound				Canon Drive Northbound				Parking Garage Eastbound				
Start Time	Left	Thru	Right	App. Total	Left	Thru	Right	App. Total	Left	Thru	Right	App. Total	Left	Thru	Right	App. Total	Int. Total
Peak Hour Analysis From 04:30 PM to 07:45 PM - Peak 1 of 1																	
Peak Hour for Entire Intersection Begins at 06:00 PM																	
06:00 PM	17	100	**1**	118	**15**	0	33	**48**	**1**	57	9	67	5	**9**	12	**26**	259
06:15 PM	16	95	0	111	15	0	31	46	1	57	6	64	3	2	7	12	233
06:30 PM	18	89	0	107	14	0	32	46	0	**66**	**15**	**81**	**6**	5	**13**	24	258
06:45 PM	**25**	**105**	1	**131**	11	**1**	**36**	48	0	64	14	78	4	4	5	13	**270**
Total Volume	76	389	2	467	55	1	132	188	2	244	44	290	18	20	37	75	1020
% App. Total	16.3	83.3	0.4		29.3	0.5	70.2		0.7	84.1	15.2		24	26.7	49.3		
PHF	.760	.926	.500	.891	.917	.250	.917	.979	.500	.924	.733	.895	.750	.556	.712	.721	.944

Counts Unlimited
PO Box 1178
Corona, CA 92878
(951) 268-6268

City of Beverly Hills
N/S: Canon Drive
E/W: Clifton Way
Weather: Clear

File Name : BVHCACLPM
Site Code :
Start Date : 4/13/2016
Page No : 2

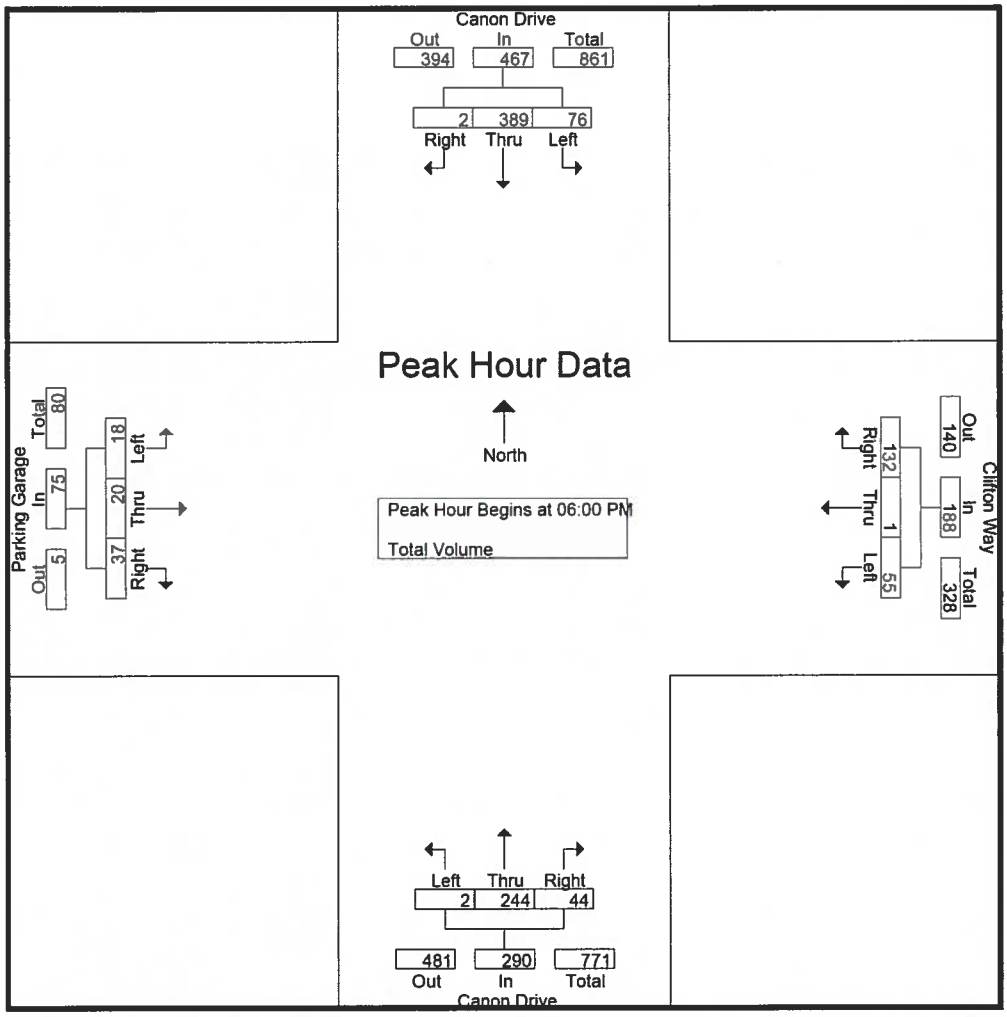

Peak Hour Analysis From 04:30 PM to 07:45 PM - Peak 1 of 1
Peak Hour for Each Approach Begins at:

	06:45 PM				06:00 PM				06:30 PM				05:00 PM			
+0 mins.	**25**	**105**	1	**131**	**15**	0	33	**48**	0	66	15	**81**	7	5	**18**	**30**
+15 mins.	15	92	0	107	15	0	31	46	0	64	14	78	3	6	11	20
+30 mins.	24	91	**2**	117	14	0	32	46	**1**	55	**16**	72	4	**7**	11	22
+45 mins.	18	97	0	115	11	**1**	**36**	48	0	**67**	10	77	**9**	3	11	23
Total Volume	82	385	3	470	55	1	132	188	1	252	55	308	23	21	51	95
% App. Total	17.4	81.9	0.6		29.3	0.5	70.2		0.3	81.8	17.9		24.2	22.1	53.7	
PHF	.820	.917	.375	.897	.917	.250	.917	.979	.250	.940	.859	.951	.639	.750	.708	.792

Location: Beverly Hills
N/S: Canon Drive
E/W: Clifton Way

Date: 4/13/2016
Day: Wednesday

PEDESTRIANS

	North Leg Canon Drive	East Leg Clifton Way	South Leg Canon Drive	West Leg Clifton Way	TOTAL
11:30 AM	2	16	24	20	62
11:45 AM	8	17	38	25	88
12:00 PM	0	10	25	30	65
12:15 PM	5	32	37	16	90
12:30 PM	4	34	25	16	79
12:45 PM	1	34	38	20	93
1:00 PM	2	28	40	40	110
1:15 PM	4	40	38	36	118
1:30 PM	4	30	35	33	102
1:45 PM	1	29	30	49	109
TOTAL VOLUMES:	31	270	330	285	916

	North Leg Canon Drive	East Leg Clifton Way	South Leg Canon Drive	West Leg Clifton Way	TOTAL
4:30 PM	1	28	23	25	77
4:45 PM	2	24	26	25	77
5:00 PM	8	34	26	28	96
5:15 PM	1	18	23	15	57
5:30 PM	1	19	15	20	55
5:45 PM	9	22	23	24	78
6:00 PM	5	17	23	19	64
6:15 PM	1	17	45	51	114
6:30 PM	0	17	27	31	75
6:45 PM	1	19	10	11	41
7:00 PM	5	12	12	16	45
7:15 PM	1	15	13	9	38
7:30 PM	0	23	18	11	52
7:45 PM	0	26	21	14	61
TOTAL VOLUMES:	35	291	305	299	930

Location: Beverly Hills
N/S: Canon Drive
E/W: Clifton Way

Date: 4/13/2016
Day: Wednesday

BICYCLES

	North Leg Canon Drive	East Leg Clifton Way	South Leg Canon Drive	West Leg Clifton Way	TOTAL
11:30 AM	1	0	1	3	5
11:45 AM	0	1	2	1	4
12:00 PM	0	0	0	1	1
12:15 PM	0	0	2	1	3
12:30 PM	0	2	2	0	4
12:45 PM	0	0	4	2	6
1:00 PM	2	0	3	2	7
1:15 PM	0	0	1	2	3
1:30 PM	0	0	1	1	2
1:45 PM	0	0	0	1	1
TOTAL VOLUMES:	3	3	16	14	36

	North Leg Canon Drive	East Leg Clifton Way	South Leg Canon Drive	West Leg Clifton Way	TOTAL
4:30 PM	1	0	0	2	3
4:45 PM	0	0	0	0	0
5:00 PM	1	0	0	0	1
5:15 PM	1	1	1	0	3
5:30 PM	0	0	1	2	3
5:45 PM	2	0	0	1	3
6:00 PM	1	0	1	1	3
6:15 PM	0	0	0	0	0
6:30 PM	0	0	0	0	0
6:45 PM	0	0	0	1	1
7:00 PM	0	0	0	0	0
7:15 PM	0	0	0	2	2
7:30 PM	0	0	0	1	1
7:45 PM	0	0	0	1	1
TOTAL VOLUMES:	6	1	3	11	21

Counts Unlimited
PO Box 1178
Corona, CA 92878
(951) 268-6268

City of Beverly Hills
N/S: Crescent Drive
E/W: Clifton Way
Weather: Clear

File Name : BVHCRCLMD
Site Code :
Start Date : 4/13/2016
Page No : 1

Groups Printed- Total Volume

	Crescent Drive Southbound				Clifton Way Westbound				Crescent Drive Northbound				Clifton Way Eastbound				
Start Time	Left	Thru	Right	App. Total	Left	Thru	Right	App. Total	Left	Thru	Right	App. Total	Left	Thru	Right	App. Total	Int. Total
11:30 AM	6	77	22	105	8	13	9	30	6	69	8	83	7	6	7	20	238
11:45 AM	7	84	21	112	7	24	17	48	9	62	7	78	9	6	5	20	258
Total	13	161	43	217	15	37	26	78	15	131	15	161	16	12	12	40	496
12:00 PM	10	76	21	107	12	22	10	44	10	62	17	89	9	9	3	21	261
12:15 PM	8	85	22	115	6	25	12	43	18	63	11	92	7	12	7	26	276
12:30 PM	13	85	25	123	11	25	15	51	10	64	11	85	9	7	10	26	285
12:45 PM	8	89	22	119	7	24	9	40	15	77	12	104	10	12	13	35	298
Total	39	335	90	464	36	96	46	178	53	266	51	370	35	40	33	108	1120
01:00 PM	7	98	33	138	5	17	11	33	5	66	7	78	14	14	14	42	291
01:15 PM	10	103	24	137	11	22	10	43	18	63	6	87	11	18	9	38	305
01:30 PM	10	89	26	125	5	19	10	34	11	63	11	85	11	8	8	27	271
01:45 PM	15	76	16	107	4	19	8	31	13	65	4	82	5	19	6	30	250
Total	42	366	99	507	25	77	39	141	47	257	28	332	41	59	37	137	1117
Grand Total	94	862	232	1188	76	210	111	397	115	654	94	863	92	111	82	285	2733
Apprch %	7.9	72.6	19.5		19.1	52.9	28		13.3	75.8	10.9		32.3	38.9	28.8		
Total %	3.4	31.5	8.5	43.5	2.8	7.7	4.1	14.5	4.2	23.9	3.4	31.6	3.4	4.1	3	10.4	

	Crescent Drive Southbound				Clifton Way Westbound				Crescent Drive Northbound				Clifton Way Eastbound				
Start Time	Left	Thru	Right	App. Total	Left	Thru	Right	App. Total	Left	Thru	Right	App. Total	Left	Thru	Right	App. Total	Int. Total
Peak Hour Analysis From 11:30 AM to 01:45 PM - Peak 1 of 1																	
Peak Hour for Entire Intersection Begins at 12:30 PM																	
12:30 PM	**13**	85	25	123	**11**	**25**	**15**	**51**	10	64	11	85	9	7	10	26	285
12:45 PM	8	89	22	119	7	24	9	40	15	**77**	**12**	**104**	10	12	13	35	298
01:00 PM	7	98	**33**	**138**	5	17	11	33	5	66	7	78	**14**	14	**14**	**42**	291
01:15 PM	10	**103**	24	137	11	22	10	43	**18**	63	6	87	11	**18**	9	38	**305**
Total Volume	38	375	104	517	34	88	45	167	48	270	36	354	44	51	46	141	1179
% App. Total	7.4	72.5	20.1		20.4	52.7	26.9		13.6	76.3	10.2		31.2	36.2	32.6		
PHF	.731	.910	.788	.937	.773	.880	.750	.819	.667	.877	.750	.851	.786	.708	.821	.839	.966

Counts Unlimited
PO Box 1178
Corona, CA 92878
(951) 268-6268

City of Beverly Hills
N/S: Crescent Drive
E/W: Clifton Way
Weather: Clear

File Name : BVHCRCLMD
Site Code :
Start Date : 4/13/2016
Page No : 2

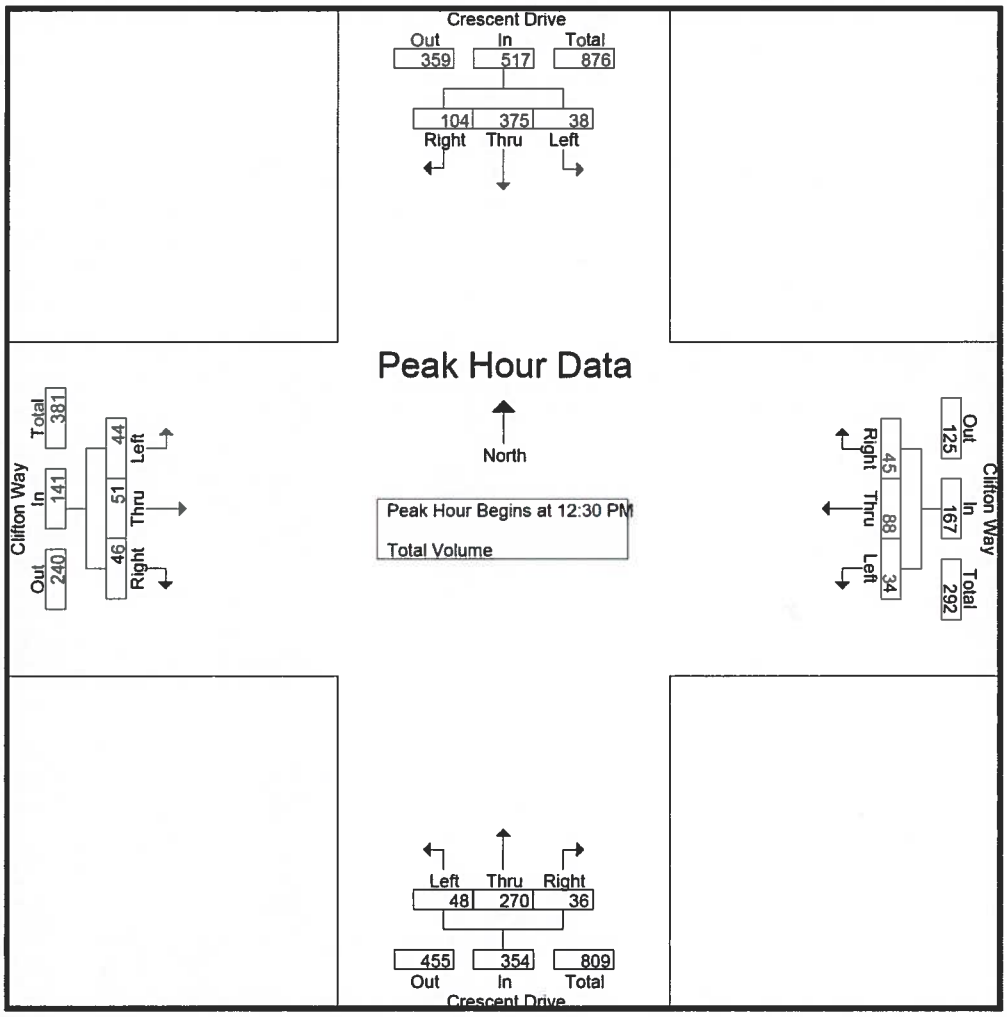

Peak Hour Analysis From 11:30 AM to 01:45 PM - Peak 1 of 1
Peak Hour for Each Approach Begins at:

	12:45 PM				11:45 AM				12:00 PM				12:45 PM			
+0 mins.	8	89	22	119	7	24	**17**	48	10	62	**17**	89	10	12	13	35
+15 mins.	7	98	**33**	**138**	**12**	22	10	44	**18**	63	11	92	**14**	14	**14**	**42**
+30 mins.	**10**	**103**	24	137	6	**25**	12	43	10	64	11	85	11	**18**	9	38
+45 mins.	10	89	26	125	11	25	15	**51**	15	**77**	12	**104**	11	8	8	27
Total Volume	35	379	105	519	36	96	54	186	53	266	51	370	46	52	44	142
% App. Total	6.7	73	20.2		19.4	51.6	29		14.3	71.9	13.8		32.4	36.6	31	
PHF	.875	.920	.795	.940	.750	.960	.794	.912	.736	.864	.750	.889	.821	.722	.786	.845

Counts Unlimited
PO Box 1178
Corona, CA 92878
(951) 268-6268

City of Beverly Hills
N/S: Crescent Drive
E/W: Clifton Way
Weather: Clear

File Name : BVHCRCLPM
Site Code :
Start Date : 4/13/2016
Page No : 1

Groups Printed- Total Volume

	Crescent Drive Southbound				Clifton Way Westbound				Crescent Drive Northbound				Clifton Way Eastbound				
Start Time	Left	Thru	Right	App. Total	Left	Thru	Right	App. Total	Left	Thru	Right	App. Total	Left	Thru	Right	App. Total	Int. Total
04:30 PM	13	98	21	132	15	12	12	39	7	74	16	97	14	15	9	38	306
04:45 PM	10	119	22	151	8	17	13	38	12	82	16	110	6	17	12	35	334
Total	23	217	43	283	23	29	25	77	19	156	32	207	20	32	21	73	640
05:00 PM	12	121	15	148	9	19	12	40	11	96	11	118	5	13	8	26	332
05:15 PM	10	128	14	152	6	15	14	35	5	88	15	108	6	25	10	41	336
05:30 PM	10	116	8	134	5	14	10	29	10	72	17	99	10	29	13	52	314
05:45 PM	20	108	18	146	5	15	17	37	5	78	11	94	7	11	7	25	302
Total	52	473	55	580	25	63	53	141	31	334	54	419	28	78	38	144	1284
06:00 PM	15	138	18	171	3	15	22	40	7	92	10	109	8	20	9	37	357
06:15 PM	9	144	14	167	7	13	15	35	10	85	24	119	11	11	2	24	345
06:30 PM	15	123	25	163	5	10	15	30	9	85	19	113	14	12	11	37	343
06:45 PM	8	115	15	138	9	14	7	30	12	103	28	143	8	13	11	32	343
Total	47	520	72	639	24	52	59	135	38	365	81	484	41	56	33	130	1388
07:00 PM	7	95	16	118	5	9	8	22	5	88	9	102	8	15	13	36	278
07:15 PM	9	101	17	127	9	11	5	25	12	70	7	89	11	10	8	29	270
07:30 PM	6	92	9	107	5	14	6	25	10	48	3	61	10	13	10	33	226
07:45 PM	8	82	14	104	2	8	7	17	6	35	3	44	7	8	1	16	181
Total	30	370	56	456	21	42	26	89	33	241	22	296	36	46	32	114	955
Grand Total	152	1580	226	1958	93	186	163	442	121	1096	189	1406	125	212	124	461	4267
Apprch %	7.8	80.7	11.5		21	42.1	36.9		8.6	78	13.4		27.1	46	26.9		
Total %	3.6	37	5.3	45.9	2.2	4.4	3.8	10.4	2.8	25.7	4.4	33	2.9	5	2.9	10.8	

	Crescent Drive Southbound				Clifton Way Westbound				Crescent Drive Northbound				Clifton Way Eastbound				
Start Time	Left	Thru	Right	App. Total	Left	Thru	Right	App. Total	Left	Thru	Right	App. Total	Left	Thru	Right	App. Total	Int. Total
Peak Hour Analysis From 04:30 PM to 07:45 PM - Peak 1 of 1																	
Peak Hour for Entire Intersection Begins at 06:00 PM																	
06:00 PM	**15**	138	18	**171**	3	**15**	**22**	**40**	7	92	10	109	8	**20**	9	**37**	**357**
06:15 PM	9	**144**	14	167	7	13	15	35	10	85	24	119	11	11	2	24	345
06:30 PM	15	123	**25**	163	5	10	15	30	9	85	19	113	**14**	12	**11**	37	343
06:45 PM	8	115	15	138	**9**	14	7	30	**12**	**103**	**28**	**143**	8	13	11	32	343
Total Volume	47	520	72	639	24	52	59	135	38	365	81	484	41	56	33	130	1388
% App. Total	7.4	81.4	11.3		17.8	38.5	43.7		7.9	75.4	16.7		31.5	43.1	25.4		
PHF	.783	.903	.720	.934	.667	.867	.670	.844	.792	.886	.723	.846	.732	.700	.750	.878	.972

Counts Unlimited
PO Box 1178
Corona, CA 92878
(951) 268-6268

City of Beverly Hills
N/S: Crescent Drive
E/W: Clifton Way
Weather: Clear

File Name : BVHCRCLPM
Site Code :
Start Date : 4/13/2016
Page No : 2

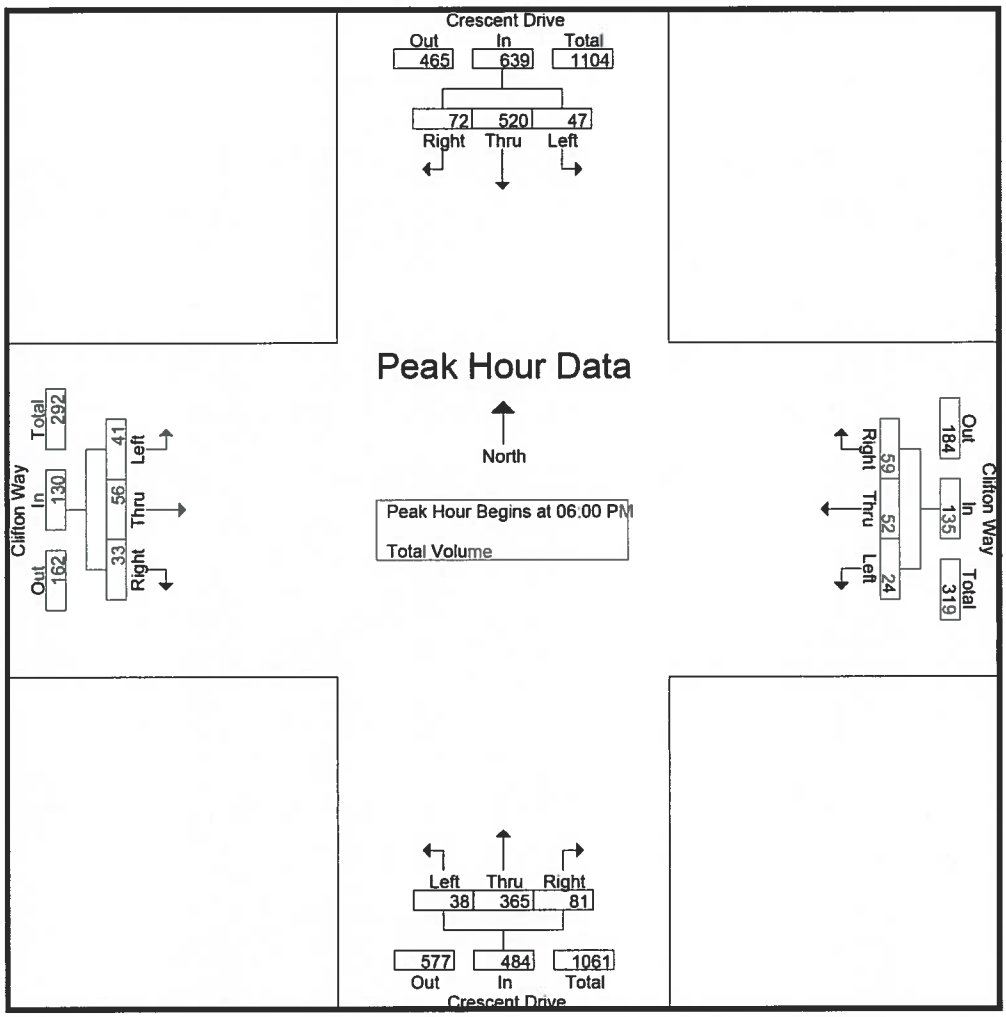

Peak Hour Analysis From 04:30 PM to 07:45 PM - Peak 1 of 1

Peak Hour for Each Approach Begins at:

	05:45 PM				04:30 PM				06:00 PM				05:15 PM			
+0 mins.	**20**	108	18	146	**15**	12	12	39	7	92	10	109	6	25	10	41
+15 mins.	15	138	18	**171**	8	17	13	38	10	85	24	119	**10**	**29**	**13**	**52**
+30 mins.	9	**144**	14	167	9	**19**	12	**40**	9	85	19	113	7	11	7	25
+45 mins.	15	123	**25**	163	6	15	**14**	35	**12**	**103**	**28**	**143**	8	20	9	37
Total Volume	59	513	75	647	38	63	51	152	38	365	81	484	31	85	39	155
% App. Total	9.1	79.3	11.6		25	41.4	33.6		7.9	75.4	16.7		20	54.8	25.2	
PHF	.738	.891	.750	.946	.633	.829	.911	.950	.792	.886	.723	.846	.775	.733	.750	.745

Location: Beverly Hills
N/S: Crescent Drive
E/W: Clifton Way

Date: 4/13/2016
Day: Wednesday

PEDESTRIANS

	North Leg Crescent Drive	East Leg Clifton Way	South Leg Crescent Drive	West Leg Clifton Way	TOTAL
11:30 AM	4	7	1	18	30
11:45 AM	7	5	7	16	35
12:00 PM	12	11	8	22	53
12:15 PM	13	6	7	25	51
12:30 PM	8	5	9	33	55
12:45 PM	6	10	10	33	59
1:00 PM	10	9	8	36	63
1:15 PM	14	11	13	46	84
1:30 PM	14	14	15	35	78
1:45 PM	7	10	6	27	50
TOTAL VOLUMES:	95	88	84	291	558

	North Leg Crescent Drive	East Leg Clifton Way	South Leg Crescent Drive	West Leg Clifton Way	TOTAL
4:30 PM	9	7	9	34	59
4:45 PM	6	4	3	20	33
5:00 PM	5	4	5	12	26
5:15 PM	6	5	9	24	44
5:30 PM	2	1	4	24	31
5:45 PM	6	1	1	20	28
6:00 PM	8	2	5	18	33
6:15 PM	4	4	2	11	21
6:30 PM	3	1	5	30	39
6:45 PM	3	4	6	9	22
7:00 PM	5	7	3	10	25
7:15 PM	7	3	2	13	25
7:30 PM	3	1	2	9	15
7:45 PM	1	2	4	10	17
TOTAL VOLUMES:	68	46	60	244	418

Location: Beverly Hills
N/S: Crescent Drive
E/W: Clifton Way

Date: 4/13/2016
Day: Wednesday

BICYCLES

	North Leg Crescent Drive	East Leg Clifton Way	South Leg Crescent Drive	West Leg Clifton Way	TOTAL
11:30 AM	1	0	1	2	4
11:45 AM	1	4	1	0	6
12:00 PM	0	1	0	0	1
12:15 PM	1	1	1	0	3
12:30 PM	2	0	0	0	2
12:45 PM	1	1	1	0	3
1:00 PM	1	1	3	2	7
1:15 PM	0	0	1	1	2
1:30 PM	0	2	0	1	3
1:45 PM	0	0	0	2	2
TOTAL VOLUMES:	7	10	8	8	33

	North Leg Crescent Drive	East Leg Clifton Way	South Leg Crescent Drive	West Leg Clifton Way	TOTAL
4:30 PM	0	2	0	2	4
4:45 PM	0	0	0	3	3
5:00 PM	0	0	0	1	1
5:15 PM	1	1	0	1	3
5:30 PM	0	0	0	2	2
5:45 PM	1	0	1	0	2
6:00 PM	0	0	1	1	2
6:15 PM	0	1	0	1	2
6:30 PM	0	0	1	0	1
6:45 PM	0	0	0	0	0
7:00 PM	0	1	0	0	1
7:15 PM	0	0	0	0	0
7:30 PM	0	0	0	1	1
7:45 PM	0	0	0	0	0
TOTAL VOLUMES:	2	5	3	12	22

Counts Unlimited
PO Box 1178
Corona, CA 92878
(951) 268-6268

City of Beverly Hills
N/S: Alley Way
E/W: Dayton Way
Weather: Clear

File Name : BVHALDAMD
Site Code :
Start Date : 4/13/2016
Page No : 1

Groups Printed- Total Volume

	Alley Way Southbound				Dayton Way Westbound				Alley Way Northbound				Dayton Way Eastbound				
Start Time	Left	Thru	Right	App. Total	Left	Thru	Right	App. Total	Left	Thru	Right	App. Total	Left	Thru	Right	App. Total	Int. Total
11:30 AM	3	0	0	3	0	0	0	0	0	0	0	0	15	66	5	86	89
11:45 AM	7	1	0	8	0	0	0	0	0	0	3	3	16	70	6	92	103
Total	10	1	0	11	0	0	0	0	0	0	3	3	31	136	11	178	192
12:00 PM	5	0	0	5	0	0	0	0	0	0	0	0	19	73	7	99	104
12:15 PM	10	0	0	10	0	0	0	0	0	0	2	2	8	87	9	104	116
12:30 PM	10	0	0	10	0	0	0	0	0	0	0	0	12	71	6	89	99
12:45 PM	6	0	0	6	0	0	0	0	0	0	3	3	18	90	6	114	123
Total	31	0	0	31	0	0	0	0	0	0	5	5	57	321	28	406	442
01:00 PM	12	0	0	12	0	0	0	0	0	0	0	0	17	80	6	103	115
01:15 PM	15	0	0	15	0	0	0	0	0	0	0	0	12	80	6	98	113
01:30 PM	10	0	0	10	0	0	0	0	0	0	4	4	12	79	8	99	113
01:45 PM	6	0	0	6	0	0	0	0	0	0	3	3	16	85	10	111	120
Total	43	0	0	43	0	0	0	0	0	0	7	7	57	324	30	411	461
Grand Total	84	1	0	85	0	0	0	0	0	0	15	15	145	781	69	995	1095
Apprch %	98.8	1.2	0		0	0	0		0	0	100		14.6	78.5	6.9		
Total %	7.7	0.1	0	7.8	0	0	0	0	0	0	1.4	1.4	13.2	71.3	6.3	90.9	

	Alley Way Southbound				Dayton Way Westbound				Alley Way Northbound				Dayton Way Eastbound				
Start Time	Left	Thru	Right	App. Total	Left	Thru	Right	App. Total	Left	Thru	Right	App. Total	Left	Thru	Right	App. Total	Int. Total
Peak Hour Analysis From 11:30 AM to 01:45 PM - Peak 1 of 1																	
Peak Hour for Entire Intersection Begins at 12:45 PM																	
12:45 PM	6	0	0	6	0	0	0	0	0	0	3	3	**18**	**90**	6	**114**	**123**
01:00 PM	12	0	0	12	0	0	0	0	0	0	0	0	17	80	6	103	115
01:15 PM	**15**	0	0	**15**	0	0	0	0	0	0	0	0	12	80	6	98	113
01:30 PM	10	0	0	10	0	0	0	0	0	0	**4**	**4**	12	79	**8**	99	113
Total Volume	43	0	0	43	0	0	0	0	0	0	7	7	59	329	26	414	464
% App. Total	100	0	0		0	0	0		0	0	100		14.3	79.5	6.3		
PHF	.717	.000	.000	.717	.000	.000	.000	.000	.000	.000	.438	.438	.819	.914	.813	.908	.943

Counts Unlimited
PO Box 1178
Corona, CA 92878
(951) 268-6268

City of Beverly Hills
N/S: Alley Way
E/W: Dayton Way
Weather: Clear

File Name : BVHALDAMD
Site Code :
Start Date : 4/13/2016
Page No : 2

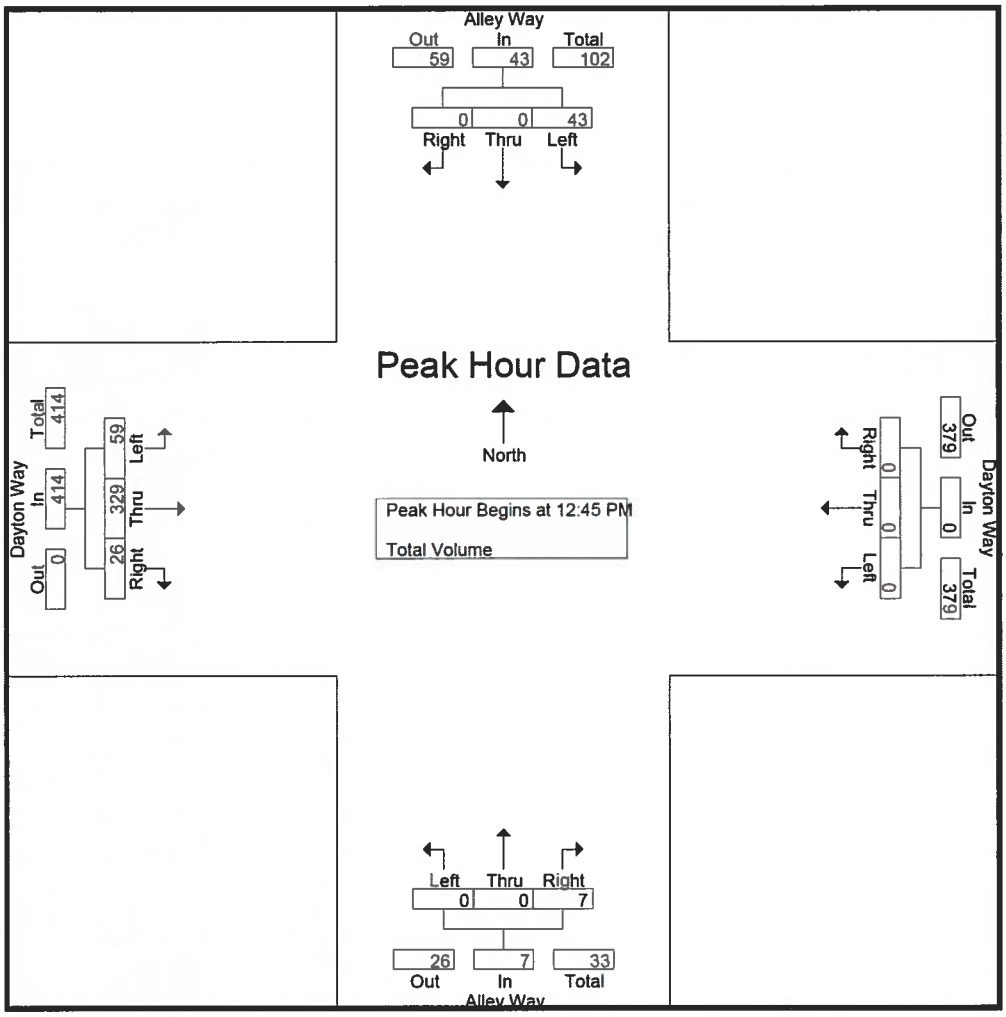

Peak Hour Analysis From 11:30 AM to 01:45 PM - Peak 1 of 1

Peak Hour for Each Approach Begins at:

	12:30 PM				11:30 AM				12:45 PM				12:45 PM			
+0 mins.	10	0	0	10	0	0	0	0	0	0	3	3	**18**	**90**	6	**114**
+15 mins.	6	0	0	6	0	0	0	0	0	0	0	0	17	80	6	103
+30 mins.	12	0	0	12	0	0	0	0	0	0	0	0	12	80	6	98
+45 mins.	**15**	0	0	**15**	0	0	0	0	0	0	**4**	**4**	12	79	**8**	99
Total Volume	43	0	0	43	0	0	0	0	0	0	7	7	59	329	26	414
% App. Total	100	0	0		0	0	0		0	0	100		14.3	79.5	6.3	
PHF	.717	.000	.000	.717	.000	.000	.000	.000	.000	.000	.438	.438	.819	.914	.813	.908

Counts Unlimited
PO Box 1178
Corona, CA 92878
(951) 268-6268

City of Beverly Hills
N/S: Alley Way
E/W: Dayton Way
Weather: Clear

File Name : BVHALDAMD
Site Code :
Start Date : 4/13/2016
Page No : 1

Groups Printed- 2+ Axle Trucks

	Alley Way Southbound				Dayton Way Westbound				Alley Way Northbound				Dayton Way Eastbound				
Start Time	Left	Thru	Right	App. Total	Left	Thru	Right	App. Total	Left	Thru	Right	App. Total	Left	Thru	Right	App. Total	Int. Total
11:30 AM	0	0	0	0	0	0	0	0	0	0	0	0	3	0	1	4	4
11:45 AM	0	1	0	1	0	0	0	0	0	0	0	0	0	0	1	1	2
Total	0	1	0	1	0	0	0	0	0	0	0	0	3	0	2	5	6
12:00 PM	0	0	0	0	0	0	0	0	0	0	0	0	1	0	1	2	2
12:15 PM	0	0	0	0	0	0	0	0	0	0	0	0	0	0	2	2	2
12:30 PM	0	0	0	0	0	0	0	0	0	0	0	0	2	0	2	4	4
12:45 PM	0	0	0	0	0	0	0	0	0	0	0	0	1	0	2	3	3
Total	0	0	0	0	0	0	0	0	0	0	0	0	4	0	7	11	11
01:00 PM	0	0	0	0	0	0	0	0	0	0	0	0	1	0	0	1	1
01:15 PM	0	0	0	0	0	0	0	0	0	0	0	0	0	0	0	0	0
01:30 PM	0	0	0	0	0	0	0	0	0	0	0	0	1	0	1	2	2
01:45 PM	0	0	0	0	0	0	0	0	0	0	0	0	0	0	0	0	0
Total	0	0	0	0	0	0	0	0	0	0	0	0	2	0	1	3	3
Grand Total	0	1	0	1	0	0	0	0	0	0	0	0	9	0	10	19	20
Apprch %	0	100	0		0	0	0		0	0	0		47.4	0	52.6		
Total %	0	5	0	5	0	0	0	0	0	0	0	0	45	0	50	95	

	Alley Way Southbound				Dayton Way Westbound				Alley Way Northbound				Dayton Way Eastbound				
Start Time	Left	Thru	Right	App. Total	Left	Thru	Right	App. Total	Left	Thru	Right	App. Total	Left	Thru	Right	App. Total	Int. Total
Peak Hour Analysis From 11:30 AM to 01:45 PM - Peak 1 of 1																	
Peak Hour for Entire Intersection Begins at 12:00 PM																	
12:00 PM	0	0	0	0	0	0	0	0	0	0	0	0	1	0	1	2	2
12:15 PM	0	0	0	0	0	0	0	0	0	0	0	0	0	0	2	2	2
12:30 PM	0	0	0	0	0	0	0	0	0	0	0	0	2	0	2	4	4
12:45 PM	0	0	0	0	0	0	0	0	0	0	0	0	1	0	2	3	3
Total Volume	0	0	0	0	0	0	0	0	0	0	0	0	4	0	7	11	11
% App. Total	0	0	0		0	0	0		0	0	0		36.4	0	63.6		
PHF	.000	.000	.000	.000	.000	.000	.000	.000	.000	.000	.000	.000	.500	.000	.875	.688	.688

Counts Unlimited
PO Box 1178
Corona, CA 92878
(951) 268-6268

City of Beverly Hills
N/S: Alley Way
E/W: Dayton Way
Weather: Clear

File Name : BVHALDAMD
Site Code :
Start Date : 4/13/2016
Page No : 2

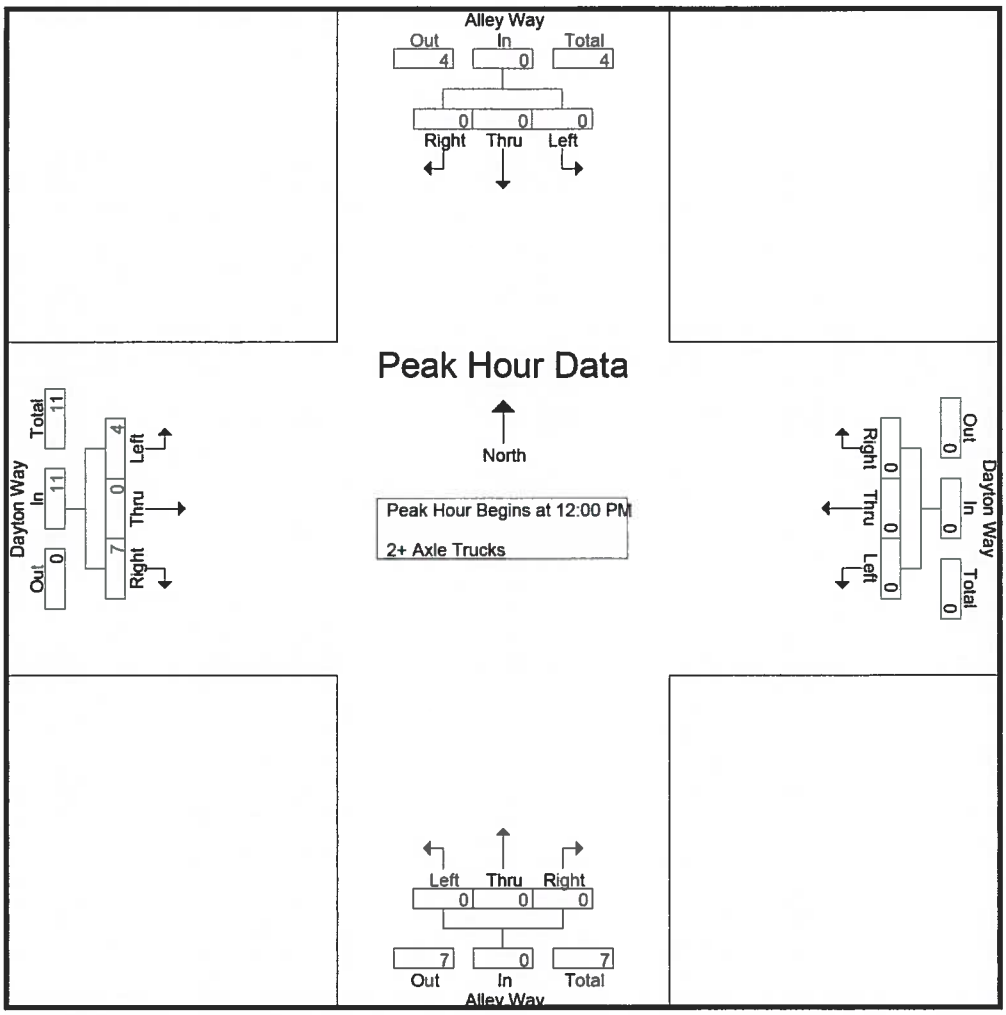

Peak Hour Analysis From 11:30 AM to 01:45 PM - Peak 1 of 1
Peak Hour for Each Approach Begins at:

	11:30 AM				11:30 AM				11:30 AM				12:00 PM			
+0 mins.	0	0	0	0	0	0	0	0	0	0	0	0	1	0	1	2
+15 mins.	0	**1**	0	**1**	0	0	0	0	0	0	0	0	0	0	**2**	2
+30 mins.	0	0	0	0	0	0	0	0	0	0	0	0	**2**	0	2	**4**
+45 mins.	0	0	0	0	0	0	0	0	0	0	0	0	1	0	2	3
Total Volume	0	1	0	1	0	0	0	0	0	0	0	0	4	0	7	11
% App. Total	0	100	0		0	0	0		0	0	0		36.4	0	63.6	
PHF	.000	.250	.000	.250	.000	.000	.000	.000	.000	.000	.000	.000	.500	.000	.875	.688

Counts Unlimited
PO Box 1178
Corona, CA 92878
(951) 268-6268

City of Beverly Hills
N/S: Alley Way
E/W: Dayton Way
Weather: Clear

File Name : BVHALDAPM
Site Code :
Start Date : 4/13/2016
Page No : 1

Groups Printed- Total Volume

	Alley Way Southbound				Dayton Way Westbound				Alley Way Northbound				Dayton Way Eastbound				
Start Time	Left	Thru	Right	App. Total	Left	Thru	Right	App. Total	Left	Thru	Right	App. Total	Left	Thru	Right	App. Total	Int. Total
04:30 PM	14	1	0	15	0	0	0	0	0	1	0	1	10	131	8	149	165
04:45 PM	10	0	0	10	0	0	0	0	0	0	0	0	5	140	8	153	163
Total	24	1	0	25	0	0	0	0	0	1	0	1	15	271	16	302	328
05:00 PM	8	0	0	8	0	0	0	0	0	0	0	0	3	148	3	154	162
05:15 PM	9	0	0	9	0	0	0	0	0	0	1	1	2	153	11	166	176
05:30 PM	5	0	0	5	0	0	0	0	0	0	0	0	4	156	12	172	177
05:45 PM	6	0	0	6	0	0	0	0	0	0	0	0	1	141	5	147	153
Total	28	0	0	28	0	0	0	0	0	0	1	1	10	598	31	639	668
06:00 PM	3	0	0	3	0	0	0	0	0	0	0	0	15	166	15	196	199
06:15 PM	7	1	0	8	0	0	0	0	0	0	3	3	16	170	6	192	203
06:30 PM	5	0	0	5	0	0	0	0	0	0	0	0	19	173	7	199	204
06:45 PM	10	0	0	10	0	0	0	0	0	0	2	2	8	147	9	164	176
Total	25	1	0	26	0	0	0	0	0	0	5	5	58	656	37	751	782
07:00 PM	10	0	0	10	0	0	0	0	0	0	0	0	12	131	6	149	159
07:15 PM	6	0	0	6	0	0	0	0	0	0	3	3	18	120	6	144	153
07:30 PM	12	0	0	12	0	1	0	1	0	0	0	0	17	100	6	123	136
07:45 PM	5	0	0	5	0	0	0	0	0	0	0	0	12	60	6	78	83
Total	33	0	0	33	0	1	0	1	0	0	3	3	59	411	24	494	531
Grand Total	110	2	0	112	0	1	0	1	0	1	9	10	142	1936	108	2186	2309
Apprch %	98.2	1.8	0		0	100	0		0	10	90		6.5	88.6	4.9		
Total %	4.8	0.1	0	4.9	0	0	0	0	0	0	0.4	0.4	6.1	83.8	4.7	94.7	

	Alley Way Southbound				Dayton Way Westbound				Alley Way Northbound				Dayton Way Eastbound				
Start Time	Left	Thru	Right	App. Total	Left	Thru	Right	App. Total	Left	Thru	Right	App. Total	Left	Thru	Right	App. Total	Int. Total
Peak Hour Analysis From 04:30 PM to 07:45 PM - Peak 1 of 1																	
Peak Hour for Entire Intersection Begins at 06:00 PM																	
06:00 PM	3	0	0	3	0	0	0	0	0	0	0	0	15	166	15	196	199
06:15 PM	7	1	0	8	0	0	0	0	0	0	3	3	16	170	6	192	203
06:30 PM	5	0	0	5	0	0	0	0	0	0	0	0	19	173	7	199	204
06:45 PM	10	0	0	10	0	0	0	0	0	0	2	2	8	147	9	164	176
Total Volume	25	1	0	26	0	0	0	0	0	0	5	5	58	656	37	751	782
% App. Total	96.2	3.8	0		0	0	0		0	0	100		7.7	87.4	4.9		
PHF	.625	.250	.000	.650	.000	.000	.000	.000	.000	.000	.417	.417	.763	.948	.617	.943	.958

Counts Unlimited
PO Box 1178
Corona, CA 92878
(951) 268-6268

City of Beverly Hills
N/S: Alley Way
E/W: Dayton Way
Weather: Clear

File Name : BVHALDAPM
Site Code :
Start Date : 4/13/2016
Page No : 2

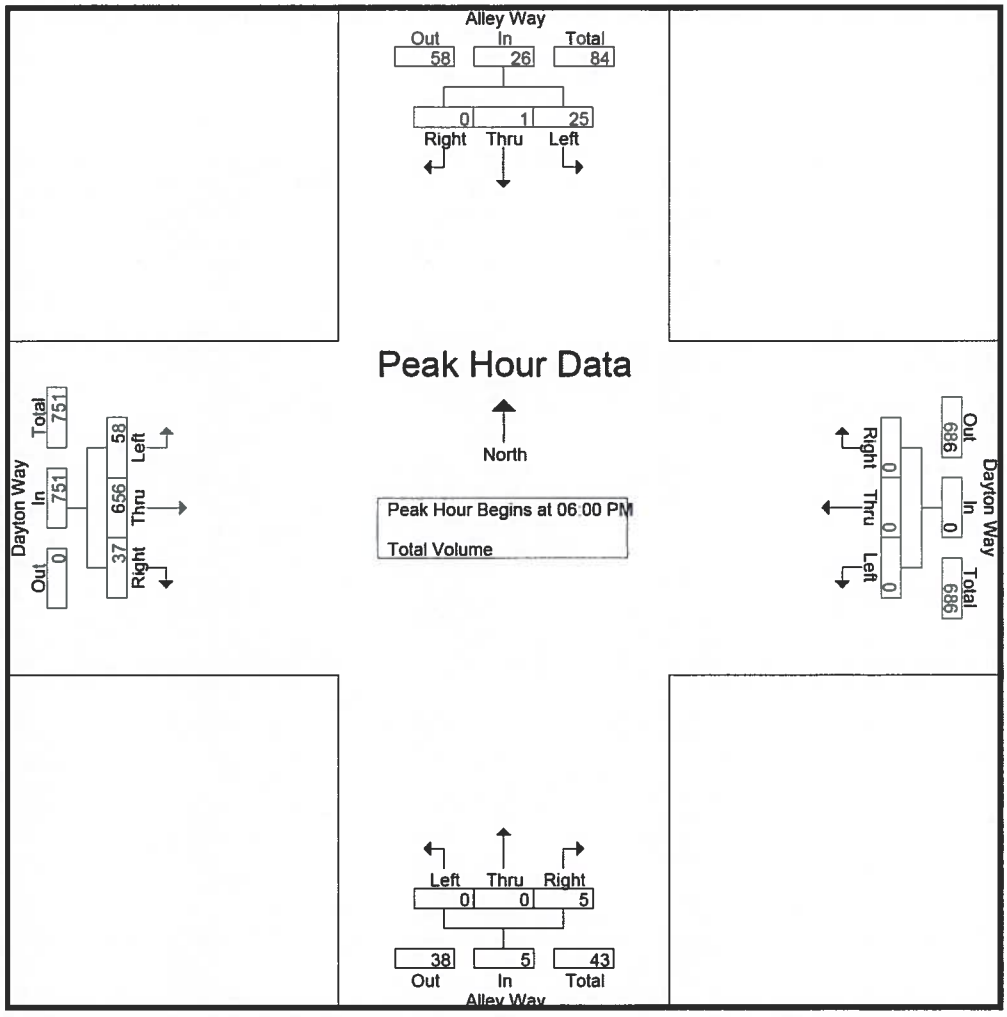

Peak Hour Analysis From 04:30 PM to 07:45 PM - Peak 1 of 1

Peak Hour for Each Approach Begins at:

	04:30 PM				06:45 PM				06:00 PM				06:00 PM			
+0 mins.	**14**	**1**	0	**15**	0	0	0	0	0	0	0	0	15	166	**15**	196
+15 mins.	10	0	0	10	0	0	0	0	0	0	**3**	**3**	16	170	6	192
+30 mins.	8	0	0	8	0	0	0	0	0	0	0	0	**19**	**173**	7	**199**
+45 mins.	9	0	0	9	0	**1**	0	**1**	0	0	2	2	8	147	9	164
Total Volume	41	1	0	42	0	1	0	1	0	0	5	5	58	656	37	751
% App. Total	97.6	2.4	0		0	100	0		0	0	100		7.7	87.4	4.9	
PHF	.732	.250	.000	.700	.000	.250	.000	.250	.000	.000	.417	.417	.763	.948	.617	.943

Counts Unlimited
PO Box 1178
Corona, CA 92878
(951) 268-6268

City of Beverly Hills
N/S: Alley Way
E/W: Dayton Way
Weather: Clear

File Name : BVHALDAPM
Site Code :
Start Date : 4/13/2016
Page No : 1

Groups Printed- 2+ Axle Trucks

	Alley Way Southbound				Dayton Way Westbound				Alley Way Northbound				Dayton Way Eastbound				
Start Time	Left	Thru	Right	App. Total	Left	Thru	Right	App. Total	Left	Thru	Right	App. Total	Left	Thru	Right	App. Total	Int. Total
04:30 PM	0	0	0	0	0	0	0	0	0	0	0	0	0	0	0	0	0
04:45 PM	0	0	0	0	0	0	0	0	0	0	0	0	0	0	1	1	1
Total	0	0	0	0	0	0	0	0	0	0	0	0	0	0	1	1	1
05:00 PM	0	0	0	0	0	0	0	0	0	0	0	0	2	0	1	3	3
05:15 PM	0	0	0	0	0	0	0	0	0	0	0	0	0	0	0	0	0
05:30 PM	0	0	0	0	0	0	0	0	0	0	0	0	0	0	0	0	0
05:45 PM	0	0	0	0	0	0	0	0	0	0	0	0	0	0	0	0	0
Total	0	0	0	0	0	0	0	0	0	0	0	0	2	0	1	3	3
06:00 PM	0	0	0	0	0	0	0	0	0	0	0	0	0	0	0	0	0
06:15 PM	0	0	0	0	0	0	0	0	0	0	0	0	0	0	0	0	0
06:30 PM	0	0	0	0	0	0	0	0	0	0	0	0	0	0	0	0	0
06:45 PM	0	0	0	0	0	0	0	0	0	0	0	0	0	0	0	0	0
Total	0	0	0	0	0	0	0	0	0	0	0	0	0	0	0	0	0
07:00 PM	0	0	0	0	0	0	0	0	0	0	0	0	0	0	0	0	0
07:15 PM	0	0	0	0	0	0	0	0	0	0	0	0	0	0	0	0	0
07:30 PM	0	0	0	0	0	0	0	0	0	0	0	0	0	0	0	0	0
07:45 PM	0	0	0	0	0	0	0	0	0	0	0	0	0	0	0	0	0
Total	0	0	0	0	0	0	0	0	0	0	0	0	0	0	0	0	0
Grand Total	0	0	0	0	0	0	0	0	0	0	0	0	2	0	2	4	4
Apprch %	0	0	0		0	0	0		0	0	0		50	0	50		
Total %	0	0	0	0	0	0	0	0	0	0	0	0	50	0	50	100	

	Alley Way Southbound				Dayton Way Westbound				Alley Way Northbound				Dayton Way Eastbound				
Start Time	Left	Thru	Right	App. Total	Left	Thru	Right	App. Total	Left	Thru	Right	App. Total	Left	Thru	Right	App. Total	Int. Total
Peak Hour Analysis From 04:30 PM to 07:45 PM - Peak 1 of 1																	
Peak Hour for Entire Intersection Begins at 04:30 PM																	
04:30 PM	0	0	0	0	0	0	0	0	0	0	0	0	0	0	0	0	0
04:45 PM	0	0	0	0	0	0	0	0	0	0	0	0	0	0	1	1	1
05:00 PM	0	0	0	0	0	0	0	0	0	0	0	0	2	0	1	3	3
05:15 PM	0	0	0	0	0	0	0	0	0	0	0	0	0	0	0	0	0
Total Volume	0	0	0	0	0	0	0	0	0	0	0	0	2	0	2	4	4
% App. Total	0	0	0		0	0	0		0	0	0		50	0	50		
PHF	.000	.000	.000	.000	.000	.000	.000	.000	.000	.000	.000	.000	.250	.000	.500	.333	.333

Counts Unlimited
PO Box 1178
Corona, CA 92878
(951) 268-6268

City of Beverly Hills
N/S: Alley Way
E/W: Dayton Way
Weather: Clear

File Name : BVHALDAPM
Site Code :
Start Date : 4/13/2016
Page No : 2

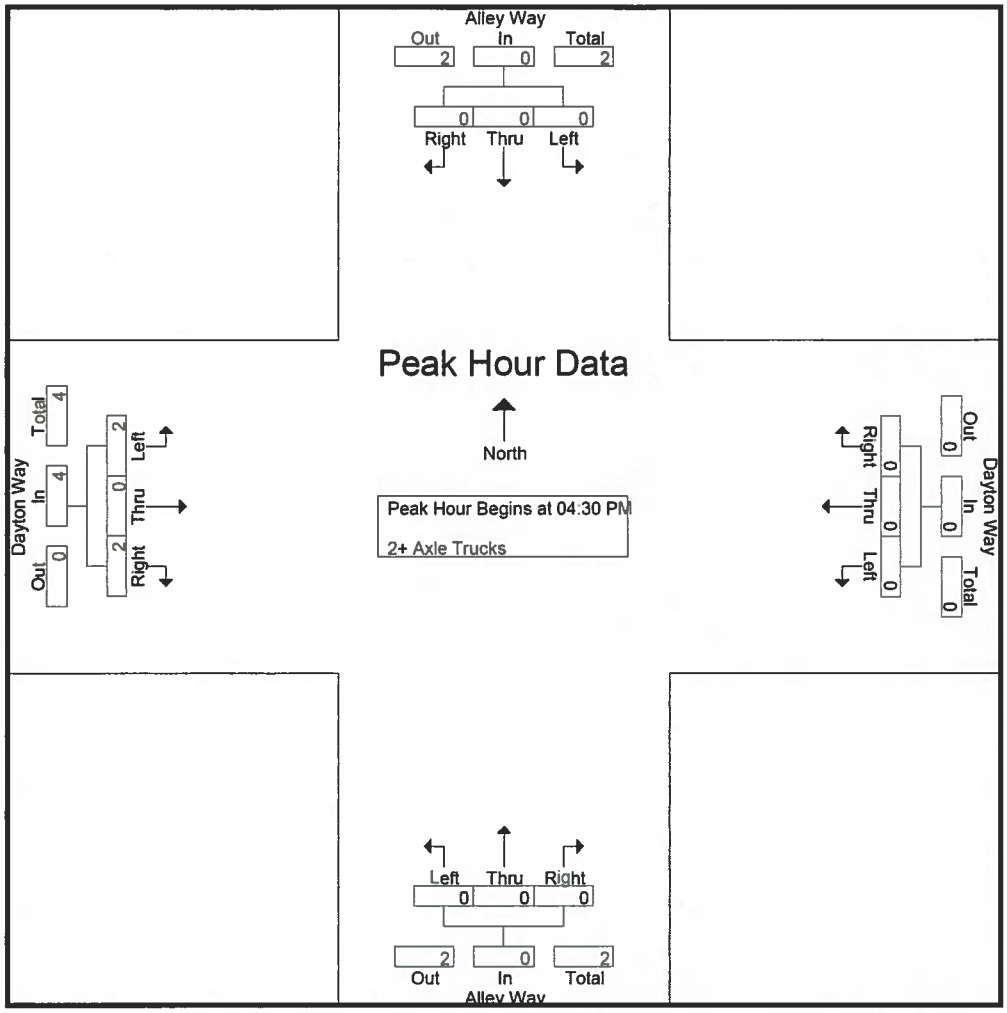

Peak Hour Analysis From 04:30 PM to 07:45 PM - Peak 1 of 1
Peak Hour for Each Approach Begins at:

	04:30 PM				04:30 PM				04:30 PM				04:30 PM			
+0 mins.	0	0	0	0	0	0	0	0	0	0	0	0	0	0	0	0
+15 mins.	0	0	0	0	0	0	0	0	0	0	0	0	0	0	1	1
+30 mins.	0	0	0	0	0	0	0	0	0	0	0	0	2	0	1	3
+45 mins.	0	0	0	0	0	0	0	0	0	0	0	0	0	0	0	0
Total Volume	0	0	0	0	0	0	0	0	0	0	0	0	2	0	2	4
% App. Total	0	0	0		0	0	0		0	0	0		50	0	50	
PHF	.000	.000	.000	.000	.000	.000	.000	.000	.000	.000	.000	.000	.250	.000	.500	.333

Location: Beverly Hills
N/S: Alley Way
E/W: Dayton Way

Date: 4/13/2016
Day: Wednesday

PEDESTRIANS

	North Leg Alley Way	East Leg Dayton Way	South Leg Alley Way	West Leg Dayton Way	TOTAL
11:30 AM	20	4	22	9	55
11:45 AM	23	1	33	4	61
12:00 PM	34	1	30	6	71
12:15 PM	26	0	44	19	89
12:30 PM	27	0	55	9	91
12:45 PM	25	9	50	3	87
1:00 PM	32	11	53	2	98
1:15 PM	56	8	64	5	133
1:30 PM	43	9	45	1	98
1:45 PM	39	3	38	4	84
TOTAL VOLUMES:	325	46	434	62	867

	North Leg Alley Way	East Leg Dayton Way	South Leg Alley Way	West Leg Dayton Way	TOTAL
4:30 PM	20	11	32	6	69
4:45 PM	16	1	15	3	35
5:00 PM	14	3	20	7	44
5:15 PM	11	3	9	6	29
5:30 PM	9	2	17	0	28
5:45 PM	13	3	10	0	26
6:00 PM	20	4	22	9	55
6:15 PM	23	1	33	4	61
6:30 PM	34	1	30	6	71
6:45 PM	26	0	44	19	89
7:00 PM	27	0	55	9	91
7:15 PM	25	9	50	3	87
7:30 PM	32	11	53	2	98
7:45 PM	56	8	64	5	133
TOTAL VOLUMES:	326	57	454	79	916

Location: Beverly Hills
N/S: Alley Way
E/W: Dayton Way

Date: 4/13/2016
Day: Wednesday

BICYCLES

	North Leg Alley Way	East Leg Dayton Way	South Leg Alley Way	West Leg Dayton Way	TOTAL
11:30 AM	3	1	0	0	4
11:45 AM	1	0	1	0	2
12:00 PM	3	1	2	2	8
12:15 PM	4	0	0	0	4
12:30 PM	2	0	0	0	2
12:45 PM	4	0	1	0	5
1:00 PM	2	0	2	0	4
1:15 PM	0	0	0	0	0
1:30 PM	2	2	1	0	5
1:45 PM	2	1	1	0	4
TOTAL VOLUMES:	23	5	8	2	38

	North Leg Alley Way	East Leg Dayton Way	South Leg Alley Way	West Leg Dayton Way	TOTAL
4:30 PM	0	0	2	0	2
4:45 PM	1	0	1	0	2
5:00 PM	0	0	0	0	0
5:15 PM	0	0	0	1	1
5:30 PM	0	0	0	0	0
5:45 PM	0	0	0	0	0
6:00 PM	3	1	0	0	4
6:15 PM	1	0	1	0	2
6:30 PM	3	1	2	2	8
6:45 PM	4	0	0	0	4
7:00 PM	2	0	0	0	2
7:15 PM	4	0	1	0	5
7:30 PM	2	0	2	0	4
7:45 PM	0	0	0	0	0
TOTAL VOLUMES:	20	2	9	3	34

Counts Unlimited, Inc.

PO Box 1178
Corona, CA 92878
Phone: (951) 268-6268
email: counts@countsunlimited.com

City of Los Angeles
Alley
S/ Dayton Way
24 Hour Directional Volume Count

BVHALSDA
Site Code: 166-16221

Start Time	4/13/2016 Wed	Northbound Morning	Northbound Afternoon	Hour Totals Morning	Hour Totals Afternoon	Southbound Morning	Southbound Afternoon	Hour Totals Morning	Hour Totals Afternoon	Combined Totals Morning	Combined Totals Afternoon
12:00		3	7			4	8				
12:15		4	7			3	8				
12:30		2	8			2	8				
12:45		0	10	9	32	1	11	10	35	19	67
01:00		3	7			3	10				
01:15		2	10			4	12				
01:30		0	8			0	8				
01:45		2	4	7	29	2	6	9	36	16	65
02:00		0	4			0	5				
02:15		0	6			0	8				
02:30		0	6			0	6				
02:45		0	2	0	18	0	2	0	21	0	39
03:00		1	6			1	6				
03:15		0	4			0	4				
03:30		0	4			0	4				
03:45		0	4	1	18	0	3	1	17	2	35
04:00		0	4			0	3				
04:15		0	6			0	5				
04:30		2	0			2	2				
04:45		1	9	3	19	1	10	3	20	6	39
05:00		2	8			2	8				
05:15		0	10			0	10				
05:30		0	7			0	8				
05:45		1	6	3	31	1	6	3	32	6	63
06:00		0	3			2	4				
06:15		0	8			0	12				
06:30		2	8			2	9				
06:45		0	7	2	26	0	7	4	32	6	58
07:00		4	4			4	4				
07:15		1	4			2	4				
07:30		2	6			3	8				
07:45		0	4	7	18	0	5	9	21	16	39
08:00		2	6			2	9				
08:15		2	3			2	3				
08:30		5	5			4	5				
08:45		2	2	11	16	2	2	10	19	21	35
09:00		6	8			7	10				
09:15		4	6			4	7				
09:30		14	3			17	3				
09:45		9	6	33	23	12	5	40	25	73	48
10:00		2	4			2	3				
10:15		2	6			2	3				
10:30		9	4			11	4				
10:45		4	5	17	19	4	3	19	13	36	32
11:00		4	4			5	4				
11:15		10	4			9	2				
11:30		6	1			8	1				
11:45		7	5	27	14	6	5	28	12	55	26
Total		120	263	120	263	136	283	136	283	256	546
Combined Total		383		383		419		419		802	
AM Peak	-	09:00	-	-	-	09:00	-	-	-	-	-
Vol.	-	33	-	-	-	40	-	-	-	-	-
P.H.F.		0.589				0.588					
PM Peak	-	-	00:30	-	-	-	00:30	-	-	-	-
Vol.	-	-	35	-	-	-	41	-	-	-	-
P.H.F.			0.875				0.854				
Percentage		31.3%	68.7%			32.5%	67.5%				
ADT/AADT		ADT 802		AADT 802							

APPENDIX C

ICU/HCM DATA WORKSHEETS
WEEKDAY MIDDAY AND PM PEAK HOURS

248 N. Canon Drive
City of Beverly Hills

Level Of Service Computation Report
ICU 1(Loss as Cycle Length %) Method (Base Volume Alternative)

Intersection #1 Canon Drive/Dayton Way

Cycle (sec):	100	Critical Vol./Cap.(X):	0.639
Loss Time (sec):	33	Average Delay (sec/veh):	xxxxxx
Optimal Cycle:	76	Level Of Service:	B

Street Name:	Canon Drive						Dayton Way					
Approach:	North Bound			South Bound			East Bound			West Bound		
Movement:	L -	T -	R	L -	T -	R	L -	T -	R	L -	T -	R
Control:	Permitted			Permitted			Permitted			Permitted		
Rights:	Include			Include			Include			Include		
Min. Green:	0	0	0	0	0	0	0	0	0	0	0	0
Y+R:	4.0	4.0	4.0	4.0	4.0	4.0	4.0	4.0	4.0	4.0	4.0	4.0
Lanes:	0 0	1 1	0	0 1	1 0	0	0 1	0 1	0	0 0	0 0	0
Volume Module:												
Base Vol:	0	244	79	85	334	0	82	257	115	0	0	0
Growth Adj:	1.00	1.00	1.00	1.00	1.00	1.00	1.00	1.00	1.00	1.00	1.00	1.00
Initial Bse:	0	244	79	85	334	0	82	257	115	0	0	0
User Adj:	1.00	1.00	1.00	1.00	1.00	1.00	1.00	1.00	1.00	1.00	1.00	1.00
PHF Adj:	0.96	0.96	0.96	0.96	0.96	0.96	0.96	0.96	0.96	0.96	0.96	0.96
PHF Volume:	0	255	82	89	349	0	86	268	120	0	0	0
Reduct Vol:	0	0	0	0	0	0	0	0	0	0	0	0
Reduced Vol:	0	255	82	89	349	0	86	268	120	0	0	0
PCE Adj:	1.00	1.00	1.00	1.00	1.00	1.00	1.00	1.00	1.00	1.00	1.00	1.00
MLF Adj:	1.00	1.00	1.00	1.00	1.00	1.00	1.00	1.00	1.00	1.00	1.00	1.00
FinalVolume:	0	255	82	89	349	0	86	268	120	0	0	0
Saturation Flow Module:												
Sat/Lane:	1600	1600	1600	1600	1600	1600	1600	1600	1600	1600	1600	1600
Adjustment:	1.00	1.00	1.00	1.00	1.00	1.00	1.00	1.00	1.00	1.00	1.00	1.00
Lanes:	0.00	1.51	0.49	0.41	1.59	0.00	0.36	1.13	0.51	0.00	0.00	0.00
Final Sat.:	0	2417	783	649	2551	0	578	1811	811	0	0	0
Capacity Analysis Module:												
Vol/Sat:	0.00	0.11	0.11	0.06	0.14	0.00	0.05	0.15	0.15	0.00	0.00	0.00
Crit Moves:		****		****				****				

248 N. Canon Drive
City of Beverly Hills

Level Of Service Computation Report
ICU 1(Loss as Cycle Length %) Method (Base Volume Alternative)

Intersection #2 Crescent Drive / Dayton Way

Cycle (sec):	100	Critical Vol./Cap.(X):	0.391
Loss Time (sec):	10	Average Delay (sec/veh):	xxxxxx
Optimal Cycle:	28	Level Of Service:	A

Street Name:	Crescent Drive						Dayton Way					
Approach:	North Bound			South Bound			East Bound			West Bound		
Movement:	L	T	R	L	T	R	L	T	R	L	T	R
Control:	Permitted			Permitted			Split Phase			Split Phase		
Rights:	Include			Include			Include			Include		
Min. Green:	0	0	0	0	0	0	0	0	0	0	0	0
Y+R:	4.0	4.0	4.0	4.0	4.0	4.0	4.0	4.0	4.0	4.0	4.0	4.0
Lanes:	0 0	1 1	0	0 1	1 0	0	1 0	1 0	1	0 0	1! 0	0
Volume Module:												
Base Vol:	0	336	30	22	370	0	139	143	110	33	0	55
Growth Adj:	1.00	1.00	1.00	1.00	1.00	1.00	1.00	1.00	1.00	1.00	1.00	1.00
Initial Bse:	0	336	30	22	370	0	139	143	110	33	0	55
User Adj:	1.00	1.00	1.00	1.00	1.00	1.00	1.00	1.00	1.00	1.00	1.00	1.00
PHF Adj:	0.94	0.94	0.94	0.94	0.94	0.94	0.94	0.94	0.94	0.94	0.94	0.94
PHF Volume:	0	359	32	24	396	0	149	153	118	35	0	59
Reduct Vol:	0	0	0	0	0	0	0	0	0	0	0	0
Reduced Vol:	0	359	32	24	396	0	149	153	118	35	0	59
PCE Adj:	1.00	1.00	1.00	1.00	1.00	1.00	1.00	1.00	1.00	1.00	1.00	1.00
MLF Adj:	1.00	1.00	1.00	1.00	1.00	1.00	1.00	1.00	1.00	1.00	1.00	1.00
FinalVolume:	0	359	32	24	396	0	149	153	118	35	0	59
Saturation Flow Module:												
Sat/Lane:	1600	1600	1600	1600	1600	1600	1600	1600	1600	1600	1600	1600
Adjustment:	1.00	1.00	1.00	1.00	1.00	1.00	1.00	1.00	1.00	1.00	1.00	1.00
Lanes:	0.00	1.84	0.16	0.11	1.89	0.00	1.00	1.00	1.00	0.38	0.00	0.62
Final Sat.:	0	2938	262	180	3020	0	1600	1600	1600	600	0	1000
Capacity Analysis Module:												
Vol/Sat:	0.00	0.12	0.12	0.01	0.13	0.00	0.09	0.10	0.07	0.06	0.00	0.06
Crit Moves:		****		****				****		****		

248 N. Canon Drive
City of Beverly Hills

Level Of Service Computation Report
2000 HCM 4-Way Stop Method (Base Volume Alternative)

Intersection #3 Canon Drive / Clifton Way

Cycle (sec):	100	Critical Vol./Cap.(X):	0.489
Loss Time (sec):	0	Average Delay (sec/veh):	13.0
Optimal Cycle:	0	Level Of Service:	B

Street Name:	Canon Drive						Clifton Way					
Approach:	North Bound			South Bound			East Bound			West Bound		
Movement:	L - T - R			L - T - R			L - T - R			L - T - R		
Control:	Stop Sign			Stop Sign			Stop Sign			Stop Sign		
Rights:	Include			Include			Include			Include		
Min. Green:	0	0	0	0	0	0	0	0	0	0	0	0
Lanes:	0 1	0 1	0	1 0	1 1	0	1 0	0 1	0	0 0	1! 0	0
Volume Module:												
Base Vol:	31	225	76	66	390	14	7	15	29	61	12	164
Growth Adj:	1.00	1.00	1.00	1.00	1.00	1.00	1.00	1.00	1.00	1.00	1.00	1.00
Initial Bse:	31	225	76	66	390	14	7	15	29	61	12	164
User Adj:	1.00	1.00	1.00	1.00	1.00	1.00	1.00	1.00	1.00	1.00	1.00	1.00
PHF Adj:	0.89	0.89	0.89	0.89	0.89	0.89	0.89	0.89	0.89	0.89	0.89	0.89
PHF Volume:	35	254	86	75	441	16	8	17	33	69	14	185
Reduct Vol:	0	0	0	0	0	0	0	0	0	0	0	0
Reduced Vol:	35	254	86	75	441	16	8	17	33	69	14	185
PCE Adj:	1.00	1.00	1.00	1.00	1.00	1.00	1.00	1.00	1.00	1.00	1.00	1.00
MLF Adj:	1.00	1.00	1.00	1.00	1.00	1.00	1.00	1.00	1.00	1.00	1.00	1.00
FinalVolume:	35	254	86	75	441	16	8	17	33	69	14	185
Saturation Flow Module:												
Adjustment:	1.00	1.00	1.00	1.00	1.00	1.00	1.00	1.00	1.00	1.00	1.00	1.00
Lanes:	0.19	1.35	0.46	1.00	1.93	0.07	1.00	0.34	0.66	0.26	0.05	0.69
Final Sat.:	101	755	265	500	1046	38	426	164	318	141	28	379
Capacity Analysis Module:												
Vol/Sat:	0.35	0.34	0.32	0.15	0.42	0.42	0.02	0.10	0.10	0.49	0.49	0.49
Crit Moves:	****				****			****				****
Delay/Veh:	12.2	11.9	11.4	10.9	13.6	13.5	10.6	10.2	10.2	14.8	14.8	14.8
Delay Adj:	1.00	1.00	1.00	1.00	1.00	1.00	1.00	1.00	1.00	1.00	1.00	1.00
AdjDel/Veh:	12.2	11.9	11.4	10.9	13.6	13.5	10.6	10.2	10.2	14.8	14.8	14.8
LOS by Move:	B	B	B	B	B	B	B	B	B	B	B	B
ApproachDel:		11.8			13.2			10.2			14.8	
Delay Adj:		1.00			1.00			1.00			1.00	
ApprAdjDel:		11.8			13.2			10.2			14.8	
LOS by Appr:		B			B			B			B	
AllWayAvgQ:	0.5	0.4	0.4	0.2	0.7	0.7	0.0	0.1	0.1	0.8	0.8	0.8

Note: Queue reported is the number of cars per lane.

248 N. Canon Drive
City of Beverly Hills

Level Of Service Computation Report
2000 HCM 4-Way Stop Method (Base Volume Alternative)

Intersection #4 Crescent Drive / Clifton Way

Cycle (sec):	100	Critical Vol./Cap.(X):	0.459
Loss Time (sec):	0	Average Delay (sec/veh):	12.2
Optimal Cycle:	0	Level Of Service:	B

Street Name:	Crescent Drive						Clifton Way					
Approach:	North Bound			South Bound			East Bound			West Bound		
Movement:	L	T	R	L	T	R	L	T	R	L	T	R
Control:	Stop Sign			Stop Sign			Stop Sign			Stop Sign		
Rights:	Include			Include			Include			Include		
Min. Green:	0	0	0	0	0	0	0	0	0	0	0	0
Lanes:	0 1	0 1	0	0 1	0 1	0	0 0	1! 0	0	0 0	1! 0	0
Volume Module:												
Base Vol:	48	270	36	38	375	104	44	51	46	34	88	45
Growth Adj:	1.00	1.00	1.00	1.00	1.00	1.00	1.00	1.00	1.00	1.00	1.00	1.00
Initial Bse:	48	270	36	38	375	104	44	51	46	34	88	45
User Adj:	1.00	1.00	1.00	1.00	1.00	1.00	1.00	1.00	1.00	1.00	1.00	1.00
PHF Adj:	0.97	0.97	0.97	0.97	0.97	0.97	0.97	0.97	0.97	0.97	0.97	0.97
PHF Volume:	50	280	37	39	388	108	46	53	48	35	91	47
Reduct Vol:	0	0	0	0	0	0	0	0	0	0	0	0
Reduced Vol:	50	280	37	39	388	108	46	53	48	35	91	47
PCE Adj:	1.00	1.00	1.00	1.00	1.00	1.00	1.00	1.00	1.00	1.00	1.00	1.00
MLF Adj:	1.00	1.00	1.00	1.00	1.00	1.00	1.00	1.00	1.00	1.00	1.00	1.00
FinalVolume:	50	280	37	39	388	108	46	53	48	35	91	47
Saturation Flow Module:												
Adjustment:	1.00	1.00	1.00	1.00	1.00	1.00	1.00	1.00	1.00	1.00	1.00	1.00
Lanes:	0.27	1.53	0.20	0.15	1.45	0.40	0.31	0.36	0.33	0.20	0.53	0.27
Final Sat.:	150	862	117	86	866	249	168	195	176	111	288	148
Capacity Analysis Module:												
Vol/Sat:	0.33	0.32	0.32	0.46	0.45	0.43	0.27	0.27	0.27	0.32	0.32	0.32
Crit Moves:	****			****			****				****	
Delay/Veh:	11.9	11.6	11.3	13.5	13.1	12.5	11.2	11.2	11.2	11.6	11.6	11.6
Delay Adj:	1.00	1.00	1.00	1.00	1.00	1.00	1.00	1.00	1.00	1.00	1.00	1.00
AdjDel/Veh:	11.9	11.6	11.3	13.5	13.1	12.5	11.2	11.2	11.2	11.6	11.6	11.6
LOS by Move:	B	B	B	B	B	B	B	B	B	B	B	B
ApproachDel:		11.6			13.0			11.2			11.6	
Delay Adj:		1.00			1.00			1.00			1.00	
ApprAdjDel:		11.6			13.0			11.2			11.6	
LOS by Appr:		B			B			B			B	
AllWayAvgQ:	0.4	0.4	0.4	0.8	0.7	0.7	0.3	0.3	0.3	0.4	0.4	0.4

Note: Queue reported is the number of cars per lane.

248 N. Canon Drive
City of Beverly Hills

Level Of Service Computation Report
ICU 1(Loss as Cycle Length %) Method (Base Volume Alternative)

Intersection #1 Canon Drive/Dayton Way

Cycle (sec):	100	Critical Vol./Cap.(X):	0.773
Loss Time (sec):	33	Average Delay (sec/veh):	xxxxxx
Optimal Cycle:	94	Level Of Service:	C

Street Name:	Canon Drive						Dayton Way					
Approach:	North Bound			South Bound			East Bound			West Bound		
Movement:	L	T	R	L	T	R	L	T	R	L	T	R
Control:	Permitted			Permitted			Permitted			Permitted		
Rights:	Include			Include			Include			Include		
Min. Green:	0	0	0	0	0	0	0	0	0	0	0	0
Y+R:	4.0	4.0	4.0	4.0	4.0	4.0	4.0	4.0	4.0	4.0	4.0	4.0
Lanes:	0 0	1 1	0	0 1	1 0	0	0 1	0 1	0	0 0	0 0	0
Volume Module:												
Base Vol:	0	287	115	82	320	0	122	540	115	0	0	0
Growth Adj:	1.00	1.00	1.00	1.00	1.00	1.00	1.00	1.00	1.00	1.00	1.00	1.00
Initial Bse:	0	287	115	82	320	0	122	540	115	0	0	0
User Adj:	1.00	1.00	1.00	1.00	1.00	1.00	1.00	1.00	1.00	1.00	1.00	1.00
PHF Adj:	0.95	0.95	0.95	0.95	0.95	0.95	0.95	0.95	0.95	0.95	0.95	0.95
PHF Volume:	0	303	121	86	338	0	129	570	121	0	0	0
Reduct Vol:	0	0	0	0	0	0	0	0	0	0	0	0
Reduced Vol:	0	303	121	86	338	0	129	570	121	0	0	0
PCE Adj:	1.00	1.00	1.00	1.00	1.00	1.00	1.00	1.00	1.00	1.00	1.00	1.00
MLF Adj:	1.00	1.00	1.00	1.00	1.00	1.00	1.00	1.00	1.00	1.00	1.00	1.00
FinalVolume:	0	303	121	86	338	0	129	570	121	0	0	0
Saturation Flow Module:												
Sat/Lane:	1600	1600	1600	1600	1600	1600	1600	1600	1600	1600	1600	1600
Adjustment:	1.00	1.00	1.00	1.00	1.00	1.00	1.00	1.00	1.00	1.00	1.00	1.00
Lanes:	0.00	1.43	0.57	0.41	1.59	0.00	0.31	1.39	0.30	0.00	0.00	0.00
Final Sat.:	0	2285	915	653	2547	0	502	2224	474	0	0	0
Capacity Analysis Module:												
Vol/Sat:	0.00	0.13	0.13	0.05	0.13	0.00	0.08	0.26	0.26	0.00	0.00	0.00
Crit Moves:		****		****				****				

248 N. Canon Drive
City of Beverly Hills

Level Of Service Computation Report
ICU 1(Loss as Cycle Length %) Method (Base Volume Alternative)

Intersection #2 Crescent Drive / Dayton Way

Cycle (sec):	100	Critical Vol./Cap.(X):	0.616
Loss Time (sec):	10	Average Delay (sec/veh):	xxxxxx
Optimal Cycle:	41	Level Of Service:	B

Street Name:	Crescent Drive						Dayton Way					
Approach:	North Bound			South Bound			East Bound			West Bound		
Movement:	L	T	R	L	T	R	L	T	R	L	T	R
Control:	Permitted			Permitted			Split Phase			Split Phase		
Rights:	Include			Include			Include			Include		
Min. Green:	0	0	0	0	0	0	0	0	0	0	0	0
Y+R:	4.0	4.0	4.0	4.0	4.0	4.0	4.0	4.0	4.0	4.0	4.0	4.0
Lanes:	0 0	1 1	0	0 1	1 0	0	1 0	1 0	1	0 0	1! 0	0
Volume Module:												
Base Vol:	0	421	41	52	385	0	156	398	163	33	0	31
Growth Adj:	1.00	1.00	1.00	1.00	1.00	1.00	1.00	1.00	1.00	1.00	1.00	1.00
Initial Bse:	0	421	41	52	385	0	156	398	163	33	0	31
User Adj:	1.00	1.00	1.00	1.00	1.00	1.00	1.00	1.00	1.00	1.00	1.00	1.00
PHF Adj:	0.90	0.90	0.90	0.90	0.90	0.90	0.90	0.90	0.90	0.90	0.90	0.90
PHF Volume:	0	466	45	58	426	0	173	441	181	37	0	34
Reduct Vol:	0	0	0	0	0	0	0	0	0	0	0	0
Reduced Vol:	0	466	45	58	426	0	173	441	181	37	0	34
PCE Adj:	1.00	1.00	1.00	1.00	1.00	1.00	1.00	1.00	1.00	1.00	1.00	1.00
MLF Adj:	1.00	1.00	1.00	1.00	1.00	1.00	1.00	1.00	1.00	1.00	1.00	1.00
FinalVolume:	0	466	45	58	426	0	173	441	181	37	0	34
Saturation Flow Module:												
Sat/Lane:	1600	1600	1600	1600	1600	1600	1600	1600	1600	1600	1600	1600
Adjustment:	1.00	1.00	1.00	1.00	1.00	1.00	1.00	1.00	1.00	1.00	1.00	1.00
Lanes:	0.00	1.82	0.18	0.24	1.76	0.00	1.00	1.00	1.00	0.52	0.00	0.48
Final Sat.:	0	2916	284	381	2819	0	1600	1600	1600	825	0	775
Capacity Analysis Module:												
Vol/Sat:	0.00	0.16	0.16	0.04	0.15	0.00	0.11	0.28	0.11	0.04	0.00	0.04
Crit Moves:		****		****				****				****

248 N. Canon Drive
City of Beverly Hills

Level Of Service Computation Report
2000 HCM 4-Way Stop Method (Base Volume Alternative)

Intersection #3 Canon Drive / Clifton Way

Cycle (sec):	100	Critical Vol./Cap.(X):	0.362
Loss Time (sec):	0	Average Delay (sec/veh):	11.4
Optimal Cycle:	0	Level Of Service:	B

Street Name:	Canon Drive						Clifton Way					
Approach:	North Bound			South Bound			East Bound			West Bound		
Movement:	L - T - R			L - T - R			L - T - R			L - T - R		
Control:	Stop Sign			Stop Sign			Stop Sign			Stop Sign		
Rights:	Include			Include			Include			Include		
Min. Green:	0	0	0	0	0	0	0	0	0	0	0	0
Lanes:	0 1 0	1 0		1 0 1	1 0		1 0 0	1 0		0 0 1!	0 0	
Volume Module:												
Base Vol:	2	244	44	76	389	2	18	20	37	55	1	132
Growth Adj:	1.00	1.00	1.00	1.00	1.00	1.00	1.00	1.00	1.00	1.00	1.00	1.00
Initial Bse:	2	244	44	76	389	2	18	20	37	55	1	132
User Adj:	1.00	1.00	1.00	1.00	1.00	1.00	1.00	1.00	1.00	1.00	1.00	1.00
PHF Adj:	0.94	0.94	0.94	0.94	0.94	0.94	0.94	0.94	0.94	0.94	0.94	0.94
PHF Volume:	2	258	47	81	412	2	19	21	39	58	1	140
Reduct Vol:	0	0	0	0	0	0	0	0	0	0	0	0
Reduced Vol:	2	258	47	81	412	2	19	21	39	58	1	140
PCE Adj:	1.00	1.00	1.00	1.00	1.00	1.00	1.00	1.00	1.00	1.00	1.00	1.00
MLF Adj:	1.00	1.00	1.00	1.00	1.00	1.00	1.00	1.00	1.00	1.00	1.00	1.00
FinalVolume:	2	258	47	81	412	2	19	21	39	58	1	140
Saturation Flow Module:												
Adjustment:	1.00	1.00	1.00	1.00	1.00	1.00	1.00	1.00	1.00	1.00	1.00	1.00
Lanes:	0.01	1.69	0.30	1.00	1.99	0.01	1.00	0.35	0.65	0.29	0.01	0.70
Final Sat.:	8	979	180	528	1137	6	457	183	338	163	3	392
Capacity Analysis Module:												
Vol/Sat:	0.27	0.26	0.26	0.15	0.36	0.36	0.04	0.12	0.12	0.36	0.36	0.36
Crit Moves:	****				****			****		****		
Delay/Veh:	10.8	10.6	10.4	10.5	12.1	12.1	10.3	9.8	9.8	12.2	12.2	12.2
Delay Adj:	1.00	1.00	1.00	1.00	1.00	1.00	1.00	1.00	1.00	1.00	1.00	1.00
AdjDel/Veh:	10.8	10.6	10.4	10.5	12.1	12.1	10.3	9.8	9.8	12.2	12.2	12.2
LOS by Move:	B	B	B	B	B	B	B	A	A	B	B	B
ApproachDel:		10.6			11.9			9.9			12.2	
Delay Adj:		1.00			1.00			1.00			1.00	
ApprAdjDel:		10.6			11.9			9.9			12.2	
LOS by Appr:		B			B			A			B	
AllWayAvgQ:	0.3	0.3	0.3	0.2	0.5	0.5	0.0	0.1	0.1	0.5	0.5	0.5

Note: Queue reported is the number of cars per lane.

Traffix 8.0.0715 (c) 2008 Dowling Assoc. Licensed to CRAIN & ASSOC., L.A.

248 N. Canon Drive
City of Beverly Hills

Level Of Service Computation Report
2000 HCM 4-Way Stop Method (Base Volume Alternative)

Intersection #4 Crescent Drive / Clifton Way

Cycle (sec):	100	Critical Vol./Cap.(X):	0.566
Loss Time (sec):	0	Average Delay (sec/veh):	14.1
Optimal Cycle:	0	Level Of Service:	B

Street Name:	Crescent Drive						Clifton Way					
Approach:	North Bound			South Bound			East Bound			West Bound		
Movement:	L -	T -	R	L -	T -	R	L -	T -	R	L -	T -	R
Control:	Stop Sign			Stop Sign			Stop Sign			Stop Sign		
Rights:	Include			Include			Include			Include		
Min. Green:	0	0	0	0	0	0	0	0	0	0	0	0
Lanes:	0 1	0 1	0	0 1	0 1	0	0 0	1! 0	0	0 0	1! 0	0
Volume Module:												
Base Vol:	38	365	81	47	520	72	41	56	33	24	52	59
Growth Adj:	1.00	1.00	1.00	1.00	1.00	1.00	1.00	1.00	1.00	1.00	1.00	1.00
Initial Bse:	38	365	81	47	520	72	41	56	33	24	52	59
User Adj:	1.00	1.00	1.00	1.00	1.00	1.00	1.00	1.00	1.00	1.00	1.00	1.00
PHF Adj:	0.97	0.97	0.97	0.97	0.97	0.97	0.97	0.97	0.97	0.97	0.97	0.97
PHF Volume:	39	376	83	48	535	74	42	58	34	25	53	61
Reduct Vol:	0	0	0	0	0	0	0	0	0	0	0	0
Reduced Vol:	39	376	83	48	535	74	42	58	34	25	53	61
PCE Adj:	1.00	1.00	1.00	1.00	1.00	1.00	1.00	1.00	1.00	1.00	1.00	1.00
MLF Adj:	1.00	1.00	1.00	1.00	1.00	1.00	1.00	1.00	1.00	1.00	1.00	1.00
FinalVolume:	39	376	83	48	535	74	42	58	34	25	53	61
Saturation Flow Module:												
Adjustment:	1.00	1.00	1.00	1.00	1.00	1.00	1.00	1.00	1.00	1.00	1.00	1.00
Lanes:	0.16	1.51	0.33	0.15	1.63	0.22	0.32	0.43	0.25	0.18	0.38	0.44
Final Sat.:	88	860	196	85	962	136	161	220	130	93	201	228
Capacity Analysis Module:												
Vol/Sat:	0.45	0.44	0.43	0.57	0.56	0.55	0.26	0.26	0.26	0.27	0.27	0.27
Crit Moves:	****			****			****					****
Delay/Veh:	13.8	13.4	12.8	16.2	15.7	15.1	11.6	11.6	11.6	11.5	11.5	11.5
Delay Adj:	1.00	1.00	1.00	1.00	1.00	1.00	1.00	1.00	1.00	1.00	1.00	1.00
AdjDel/Veh:	13.8	13.4	12.8	16.2	15.7	15.1	11.6	11.6	11.6	11.5	11.5	11.5
LOS by Move:	B	B	B	C	C	C	B	B	B	B	B	B
ApproachDel:		13.3			15.7			11.6			11.5	
Delay Adj:		1.00			1.00			1.00			1.00	
ApprAdjDel:		13.3			15.7			11.6			11.5	
LOS by Appr:		B			C			B			B	
AllWayAvgQ:	0.7	0.7	0.7	1.2	1.1	1.1	0.3	0.3	0.3	0.3	0.3	0.3

Note: Queue reported is the number of cars per lane.

Traffix 8.0.0715 (c) 2008 Dowling Assoc. Licensed to CRAIN & ASSOC., L.A.

Level Of Service Computation Report
ICU 1(Loss as Cycle Length %) Method (Future Volume Alternative)

Intersection #1 Canon Drive/Dayton Way

Cycle (sec):	100	Critical Vol./Cap.(X):	0.654
Loss Time (sec):	33	Average Delay (sec/veh):	xxxxxx
Optimal Cycle:	77	Level Of Service:	B

Street Name:	Canon Drive						Dayton Way					
Approach:	North Bound			South Bound			East Bound			West Bound		
Movement:	L	T	R	L	T	R	L	T	R	L	T	R
Control:	Permitted			Permitted			Permitted			Permitted		
Rights:	Include			Include			Include			Include		
Min. Green:	0	0	0	0	0	0	0	0	0	0	0	0
Y+R:	4.0	4.0	4.0	4.0	4.0	4.0	4.0	4.0	4.0	4.0	4.0	4.0
Lanes:	0 0	1 1	0	0 1	1 0	0	0 1	0 1	0	0 0	0 0	0
Volume Module:												
Base Vol:	0	244	79	85	334	0	82	257	115	0	0	0
Growth Adj:	1.00	1.00	1.00	1.00	1.00	1.00	1.00	1.00	1.00	1.00	1.00	1.00
Initial Bse:	0	244	79	85	334	0	82	257	115	0	0	0
Added Vol:	0	0	0	0	0	0	0	0	0	0	0	0
Project Tri:	0	4	31	6	0	0	0	0	0	0	0	0
Initial Fut:	0	248	110	91	334	0	82	257	115	0	0	0
User Adj:	1.00	1.00	1.00	1.00	1.00	1.00	1.00	1.00	1.00	1.00	1.00	1.00
PHF Adj:	0.96	0.96	0.96	0.96	0.96	0.96	0.96	0.96	0.96	0.96	0.96	0.96
PHF Volume:	0	259	115	95	349	0	86	268	120	0	0	0
Reduct Vol:	0	0	0	0	0	0	0	0	0	0	0	0
Reduced Vol:	0	259	115	95	349	0	86	268	120	0	0	0
PCE Adj:	1.00	1.00	1.00	1.00	1.00	1.00	1.00	1.00	1.00	1.00	1.00	1.00
MLF Adj:	1.00	1.00	1.00	1.00	1.00	1.00	1.00	1.00	1.00	1.00	1.00	1.00
FinalVolume:	0	259	115	95	349	0	86	268	120	0	0	0
Saturation Flow Module:												
Sat/Lane:	1600	1600	1600	1600	1600	1600	1600	1600	1600	1600	1600	1600
Adjustment:	1.00	1.00	1.00	1.00	1.00	1.00	1.00	1.00	1.00	1.00	1.00	1.00
Lanes:	0.00	1.39	0.61	0.43	1.57	0.00	0.36	1.13	0.51	0.00	0.00	0.00
Final Sat.:	0	2217	983	685	2515	0	578	1811	811	0	0	0
Capacity Analysis Module:												
Vol/Sat:	0.00	0.12	0.12	0.06	0.14	0.00	0.05	0.15	0.15	0.00	0.00	0.00
Crit Moves:		****		****				****				

Traffix 8.0.0715 (c) 2008 Dowling Assoc. Licensed to CRAIN & ASSOC., L.A.

Level Of Service Computation Report
ICU 1(Loss as Cycle Length %) Method (Future Volume Alternative)

Intersection #2 Crescent Drive / Dayton Way

Cycle (sec):	100	Critical Vol./Cap.(X):	0.392
Loss Time (sec):	10	Average Delay (sec/veh):	xxxxxx
Optimal Cycle:	28	Level Of Service:	A

Street Name:	Crescent Drive						Dayton Way					
Approach:	North Bound			South Bound			East Bound			West Bound		
Movement:	L	T	R	L	T	R	L	T	R	L	T	R
Control:	Permitted			Permitted			Split Phase			Split Phase		
Rights:	Include			Include			Include			Include		
Min. Green:	0	0	0	0	0	0	0	0	0	0	0	0
Y+R:	4.0	4.0	4.0	4.0	4.0	4.0	4.0	4.0	4.0	4.0	4.0	4.0
Lanes:	0 0	1 1	0	0 1	1 0	0	1 0	1 0	1	0 0	1! 0	0
Volume Module:												
Base Vol:	0	336	30	22	370	0	139	143	110	33	0	55
Growth Adj:	1.00	1.00	1.00	1.00	1.00	1.00	1.00	1.00	1.00	1.00	1.00	1.00
Initial Bse:	0	336	30	22	370	0	139	143	110	33	0	55
Added Vol:	0	0	0	0	0	0	0	0	0	0	0	0
Project Tri:	0	0	0	0	5	0	1	1	10	0	0	0
Initial Fut:	0	336	30	22	375	0	140	144	120	33	0	55
User Adj:	1.00	1.00	1.00	1.00	1.00	1.00	1.00	1.00	1.00	1.00	1.00	1.00
PHF Adj:	0.94	0.94	0.94	0.94	0.94	0.94	0.94	0.94	0.94	0.94	0.94	0.94
PHF Volume:	0	359	32	24	401	0	150	154	128	35	0	59
Reduct Vol:	0	0	0	0	0	0	0	0	0	0	0	0
Reduced Vol:	0	359	32	24	401	0	150	154	128	35	0	59
PCE Adj:	1.00	1.00	1.00	1.00	1.00	1.00	1.00	1.00	1.00	1.00	1.00	1.00
MLF Adj:	1.00	1.00	1.00	1.00	1.00	1.00	1.00	1.00	1.00	1.00	1.00	1.00
FinalVolume:	0	359	32	24	401	0	150	154	128	35	0	59
Saturation Flow Module:												
Sat/Lane:	1600	1600	1600	1600	1600	1600	1600	1600	1600	1600	1600	1600
Adjustment:	1.00	1.00	1.00	1.00	1.00	1.00	1.00	1.00	1.00	1.00	1.00	1.00
Lanes:	0.00	1.84	0.16	0.11	1.89	0.00	1.00	1.00	1.00	0.38	0.00	0.62
Final Sat.:	0	2938	262	177	3023	0	1600	1600	1600	600	0	1000
Capacity Analysis Module:												
Vol/Sat:	0.00	0.12	0.12	0.01	0.13	0.00	0.09	0.10	0.08	0.06	0.00	0.06
Crit Moves:		****		****				****		****		

Level Of Service Computation Report
2000 HCM 4-Way Stop Method (Future Volume Alternative)

Intersection #3 Canon Drive / Clifton Way

Cycle (sec):	100	Critical Vol./Cap.(X):	0.536
Loss Time (sec):	0	Average Delay (sec/veh):	13.6
Optimal Cycle:	0	Level Of Service:	B

Street Name:	Canon Drive						Clifton Way					
Approach:	North Bound			South Bound			East Bound			West Bound		
Movement:	L	T	R	L	T	R	L	T	R	L	T	R
Control:	Stop Sign			Stop Sign			Stop Sign			Stop Sign		
Rights:	Include			Include			Include			Include		
Min. Green:	0	0	0	0	0	0	0	0	0	0	0	0
Lanes:	0 1	0 1	0	1	0 1	1 0	1	0 0	1 0	0 0	1!	0 0
Volume Module:												
Base Vol:	31	225	76	66	390	14	7	15	29	61	12	164
Growth Adj:	1.00	1.00	1.00	1.00	1.00	1.00	1.00	1.00	1.00	1.00	1.00	1.00
Initial Bse:	31	225	76	66	390	14	7	15	29	61	12	164
Added Vol:	0	0	0	0	0	0	0	0	0	0	0	0
Project Tri:	0	14	0	0	0	0	0	0	0	1	0	21
Initial Fut:	31	239	76	66	390	14	7	15	29	62	12	185
User Adj:	1.00	1.00	1.00	1.00	1.00	1.00	1.00	1.00	1.00	1.00	1.00	1.00
PHF Adj:	0.89	0.89	0.89	0.89	0.89	0.89	0.89	0.89	0.89	0.89	0.89	0.89
PHF Volume:	35	270	86	75	441	16	8	17	33	70	14	209
Reduct Vol:	0	0	0	0	0	0	0	0	0	0	0	0
Reduced Vol:	35	270	86	75	441	16	8	17	33	70	14	209
PCE Adj:	1.00	1.00	1.00	1.00	1.00	1.00	1.00	1.00	1.00	1.00	1.00	1.00
MLF Adj:	1.00	1.00	1.00	1.00	1.00	1.00	1.00	1.00	1.00	1.00	1.00	1.00
FinalVolume:	35	270	86	75	441	16	8	17	33	70	14	209
Saturation Flow Module:												
Adjustment:	1.00	1.00	1.00	1.00	1.00	1.00	1.00	1.00	1.00	1.00	1.00	1.00
Lanes:	0.18	1.38	0.44	1.00	1.93	0.07	1.00	0.34	0.66	0.24	0.05	0.71
Final Sat.:	96	757	249	491	1024	37	419	161	311	131	25	390
Capacity Analysis Module:												
Vol/Sat:	0.37	0.36	0.34	0.15	0.43	0.43	0.02	0.11	0.11	0.54	0.54	0.54
Crit Moves:	****				****			****				****
Delay/Veh:	12.7	12.3	11.8	11.1	14.0	13.9	10.7	10.3	10.3	15.9	15.9	15.9
Delay Adj:	1.00	1.00	1.00	1.00	1.00	1.00	1.00	1.00	1.00	1.00	1.00	1.00
AdjDel/Veh:	12.7	12.3	11.8	11.1	14.0	13.9	10.7	10.3	10.3	15.9	15.9	15.9
LOS by Move:	B	B	B	B	B	B	B	B	B	C	C	C
ApproachDel:	12.2			13.6			10.4			15.9		
Delay Adj:	1.00			1.00			1.00			1.00		
ApprAdjDel:	12.2			13.6			10.4			15.9		
LOS by Appr:	B			B			B			C		
AllWayAvgQ:	0.5	0.5	0.5	0.2	0.7	0.7	0.0	0.1	0.1	1.0	1.0	1.0

Note: Queue reported is the number of cars per lane.

Traffix 8.0.0715 (c) 2008 Dowling Assoc. Licensed to CRAIN & ASSOC., L.A.

Level Of Service Computation Report
2000 HCM 4-Way Stop Method (Future Volume Alternative)

Intersection #4 Crescent Drive / Clifton Way

Cycle (sec):	100	Critical Vol./Cap.(X):	0.473
Loss Time (sec):	0	Average Delay (sec/veh):	12.3
Optimal Cycle:	0	Level Of Service:	B

Street Name:	Crescent Drive						Clifton Way					
Approach:	North Bound			South Bound			East Bound			West Bound		
Movement:	L - T - R			L - T - R			L - T - R			L - T - R		
Control:	Stop Sign			Stop Sign			Stop Sign			Stop Sign		
Rights:	Include			Include			Include			Include		
Min. Green:	0	0	0	0	0	0	0	0	0	0	0	0
Lanes:	0 1 0 1 0			0 1 0 1 0			0 0 1! 0 0			0 0 1! 0 0		
Volume Module:												
Base Vol:	48	270	36	38	375	104	44	51	46	34	88	45
Growth Adj:	1.00	1.00	1.00	1.00	1.00	1.00	1.00	1.00	1.00	1.00	1.00	1.00
Initial Bse:	48	270	36	38	375	104	44	51	46	34	88	45
Added Vol:	0	0	0	0	0	0	0	0	0	0	0	0
Project Tri:	0	0	0	0	3	12	0	0	0	0	0	0
Initial Fut:	48	270	36	38	378	116	44	51	46	34	88	45
User Adj:	1.00	1.00	1.00	1.00	1.00	1.00	1.00	1.00	1.00	1.00	1.00	1.00
PHF Adj:	0.97	0.97	0.97	0.97	0.97	0.97	0.97	0.97	0.97	0.97	0.97	0.97
PHF Volume:	50	280	37	39	391	120	46	53	48	35	91	47
Reduct Vol:	0	0	0	0	0	0	0	0	0	0	0	0
Reduced Vol:	50	280	37	39	391	120	46	53	48	35	91	47
PCE Adj:	1.00	1.00	1.00	1.00	1.00	1.00	1.00	1.00	1.00	1.00	1.00	1.00
MLF Adj:	1.00	1.00	1.00	1.00	1.00	1.00	1.00	1.00	1.00	1.00	1.00	1.00
FinalVolume:	50	280	37	39	391	120	46	53	48	35	91	47
Saturation Flow Module:												
Adjustment:	1.00	1.00	1.00	1.00	1.00	1.00	1.00	1.00	1.00	1.00	1.00	1.00
Lanes:	0.27	1.53	0.20	0.14	1.42	0.44	0.31	0.36	0.33	0.20	0.53	0.27
Final Sat.:	149	858	117	83	849	271	167	194	175	111	287	147
Capacity Analysis Module:												
Vol/Sat:	0.33	0.33	0.32	0.47	0.46	0.44	0.27	0.27	0.27	0.32	0.32	0.32
Crit Moves:	****			****			****				****	
Delay/Veh:	12.0	11.7	11.4	13.8	13.3	12.6	11.3	11.3	11.3	11.7	11.7	11.7
Delay Adj:	1.00	1.00	1.00	1.00	1.00	1.00	1.00	1.00	1.00	1.00	1.00	1.00
AdjDel/Veh:	12.0	11.7	11.4	13.8	13.3	12.6	11.3	11.3	11.3	11.7	11.7	11.7
LOS by Move:	B	B	B	B	B	B	B	B	B	B	B	B
ApproachDel:		11.7			13.2			11.3			11.7	
Delay Adj:		1.00			1.00			1.00			1.00	
ApprAdjDel:		11.7			13.2			11.3			11.7	
LOS by Appr:		B			B			B			B	
AllWayAvgQ:	0.5	0.4	0.4	0.8	0.7	0.7	0.3	0.3	0.3	0.4	0.4	0.4

Note: Queue reported is the number of cars per lane.

Traffix 8.0.0715 (c) 2008 Dowling Assoc. Licensed to CRAIN & ASSOC., L.A.

Level Of Service Computation Report
ICU 1(Loss as Cycle Length %) Method (Future Volume Alternative)

Intersection #1 Canon Drive/Dayton Way

Cycle (sec):	100	Critical Vol./Cap.(X):	0.798
Loss Time (sec):	33	Average Delay (sec/veh):	xxxxxx
Optimal Cycle:	98	Level Of Service:	C

Street Name:	Canon Drive						Dayton Way					
Approach:	North Bound			South Bound			East Bound			West Bound		
Movement:	L	T	R	L	T	R	L	T	R	L	T	R
Control:	Permitted			Permitted			Permitted			Permitted		
Rights:	Include			Include			Include			Include		
Min. Green:	0	0	0	0	0	0	0	0	0	0	0	0
Y+R:	4.0	4.0	4.0	4.0	4.0	4.0	4.0	4.0	4.0	4.0	4.0	4.0
Lanes:	0 0	1 1	0	0 1	1 0	0	0 1	0 1	0	0 0	0 0	0
Volume Module:												
Base Vol:	0	287	115	82	320	0	122	540	115	0	0	0
Growth Adj:	1.00	1.00	1.00	1.00	1.00	1.00	1.00	1.00	1.00	1.00	1.00	1.00
Initial Bse:	0	287	115	82	320	0	122	540	115	0	0	0
Added Vol:	0	0	0	0	0	0	0	0	0	0	0	0
Project Tri:	0	8	48	10	0	0	0	0	0	0	0	0
Initial Fut:	0	295	163	92	320	0	122	540	115	0	0	0
User Adj:	1.00	1.00	1.00	1.00	1.00	1.00	1.00	1.00	1.00	1.00	1.00	1.00
PHF Adj:	0.95	0.95	0.95	0.95	0.95	0.95	0.95	0.95	0.95	0.95	0.95	0.95
PHF Volume:	0	311	172	97	338	0	129	570	121	0	0	0
Reduct Vol:	0	0	0	0	0	0	0	0	0	0	0	0
Reduced Vol:	0	311	172	97	338	0	129	570	121	0	0	0
PCE Adj:	1.00	1.00	1.00	1.00	1.00	1.00	1.00	1.00	1.00	1.00	1.00	1.00
MLF Adj:	1.00	1.00	1.00	1.00	1.00	1.00	1.00	1.00	1.00	1.00	1.00	1.00
FinalVolume:	0	311	172	97	338	0	129	570	121	0	0	0
Saturation Flow Module:												
Sat/Lane:	1600	1600	1600	1600	1600	1600	1600	1600	1600	1600	1600	1600
Adjustment:	1.00	1.00	1.00	1.00	1.00	1.00	1.00	1.00	1.00	1.00	1.00	1.00
Lanes:	0.00	1.29	0.71	0.45	1.55	0.00	0.31	1.39	0.30	0.00	0.00	0.00
Final Sat.:	0	2061	1139	715	2485	0	502	2224	474	0	0	0
Capacity Analysis Module:												
Vol/Sat:	0.00	0.15	0.15	0.06	0.14	0.00	0.08	0.26	0.26	0.00	0.00	0.00
Crit Moves:		****		****				****				

Traffix 8.0.0715 (c) 2008 Dowling Assoc. Licensed to CRAIN & ASSOC., L.A.

Level Of Service Computation Report
ICU 1(Loss as Cycle Length %) Method (Future Volume Alternative)

Intersection #2 Crescent Drive / Dayton Way

Cycle (sec):	100	Critical Vol./Cap.(X):	0.616
Loss Time (sec):	10	Average Delay (sec/veh):	xxxxxx
Optimal Cycle:	41	Level Of Service:	B

Street Name:	Crescent Drive						Dayton Way					
Approach:	North Bound			South Bound			East Bound			West Bound		
Movement:	L	T	R	L	T	R	L	T	R	L	T	R
Control:	Permitted			Permitted			Split Phase			Split Phase		
Rights:	Include			Include			Include			Include		
Min. Green:	0	0	0	0	0	0	0	0	0	0	0	0
Y+R:	4.0	4.0	4.0	4.0	4.0	4.0	4.0	4.0	4.0	4.0	4.0	4.0
Lanes:	0 0	1 1	0	0 1	1 0	0	1 0	1 0	1	0 0	1! 0	0
Volume Module:												
Base Vol:	0	421	41	52	385	0	156	398	163	33	0	31
Growth Adj:	1.00	1.00	1.00	1.00	1.00	1.00	1.00	1.00	1.00	1.00	1.00	1.00
Initial Bse:	0	421	41	52	385	0	156	398	163	33	0	31
Added Vol:	0	0	0	0	0	0	0	0	0	0	0	0
Project Tri:	0	0	0	0	8	0	2	1	17	0	0	0
Initial Fut:	0	421	41	52	393	0	158	399	180	33	0	31
User Adj:	1.00	1.00	1.00	1.00	1.00	1.00	1.00	1.00	1.00	1.00	1.00	1.00
PHF Adj:	0.90	0.90	0.90	0.90	0.90	0.90	0.90	0.90	0.90	0.90	0.90	0.90
PHF Volume:	0	466	45	58	435	0	175	442	199	37	0	34
Reduct Vol:	0	0	0	0	0	0	0	0	0	0	0	0
Reduced Vol:	0	466	45	58	435	0	175	442	199	37	0	34
PCE Adj:	1.00	1.00	1.00	1.00	1.00	1.00	1.00	1.00	1.00	1.00	1.00	1.00
MLF Adj:	1.00	1.00	1.00	1.00	1.00	1.00	1.00	1.00	1.00	1.00	1.00	1.00
FinalVolume:	0	466	45	58	435	0	175	442	199	37	0	34
Saturation Flow Module:												
Sat/Lane:	1600	1600	1600	1600	1600	1600	1600	1600	1600	1600	1600	1600
Adjustment:	1.00	1.00	1.00	1.00	1.00	1.00	1.00	1.00	1.00	1.00	1.00	1.00
Lanes:	0.00	1.82	0.18	0.23	1.77	0.00	1.00	1.00	1.00	0.52	0.00	0.48
Final Sat.:	0	2916	284	374	2826	0	1600	1600	1600	825	0	775
Capacity Analysis Module:												
Vol/Sat:	0.00	0.16	0.16	0.04	0.15	0.00	0.11	0.28	0.12	0.04	0.00	0.04
Crit Moves:		****		****				****				****

Traffix 8.0.0715 (c) 2008 Dowling Assoc. Licensed to CRAIN & ASSOC., L.A.

Level Of Service Computation Report
2000 HCM 4-Way Stop Method (Future Volume Alternative)

Intersection #3 Canon Drive / Clifton Way

Cycle (sec):	100	Critical Vol./Cap.(X):	0.428
Loss Time (sec):	0	Average Delay (sec/veh):	12.0
Optimal Cycle:	0	Level Of Service:	B

Street Name:	Canon Drive						Clifton Way					
Approach:	North Bound			South Bound			East Bound			West Bound		
Movement:	L - T - R			L - T - R			L - T - R			L - T - R		
Control:	Stop Sign			Stop Sign			Stop Sign			Stop Sign		
Rights:	Include			Include			Include			Include		
Min. Green:	0	0	0	0	0	0	0	0	0	0	0	0
Lanes:	0 1 0 1 0			1 0 1 1 0			1 0 0 1 0			0 0 1! 0 0		
Volume Module:												
Base Vol:	2	244	44	76	389	2	18	20	37	55	1	132
Growth Adj:	1.00	1.00	1.00	1.00	1.00	1.00	1.00	1.00	1.00	1.00	1.00	1.00
Initial Bse:	2	244	44	76	389	2	18	20	37	55	1	132
Added Vol:	0	0	0	0	0	0	0	0	0	0	0	0
Project Tri:	0	21	0	0	0	0	0	0	0	2	0	35
Initial Fut:	2	265	44	76	389	2	18	20	37	57	1	167
User Adj:	1.00	1.00	1.00	1.00	1.00	1.00	1.00	1.00	1.00	1.00	1.00	1.00
PHF Adj:	0.94	0.94	0.94	0.94	0.94	0.94	0.94	0.94	0.94	0.94	0.94	0.94
PHF Volume:	2	281	47	81	412	2	19	21	39	60	1	177
Reduct Vol:	0	0	0	0	0	0	0	0	0	0	0	0
Reduced Vol:	2	281	47	81	412	2	19	21	39	60	1	177
PCE Adj:	1.00	1.00	1.00	1.00	1.00	1.00	1.00	1.00	1.00	1.00	1.00	1.00
MLF Adj:	1.00	1.00	1.00	1.00	1.00	1.00	1.00	1.00	1.00	1.00	1.00	1.00
FinalVolume:	2	281	47	81	412	2	19	21	39	60	1	177
Saturation Flow Module:												
Adjustment:	1.00	1.00	1.00	1.00	1.00	1.00	1.00	1.00	1.00	1.00	1.00	1.00
Lanes:	0.01	1.71	0.28	1.00	1.99	0.01	1.00	0.35	0.65	0.25	0.01	0.74
Final Sat.:	7	964	163	511	1099	6	445	177	328	141	2	413
Capacity Analysis Module:												
Vol/Sat:	0.30	0.29	0.29	0.16	0.37	0.37	0.04	0.12	0.12	0.43	0.43	0.43
Crit Moves:	****				****			****			****	
Delay/Veh:	11.3	11.1	10.9	10.8	12.6	12.6	10.5	10.0	10.0	13.4	13.4	13.4
Delay Adj:	1.00	1.00	1.00	1.00	1.00	1.00	1.00	1.00	1.00	1.00	1.00	1.00
AdjDel/Veh:	11.3	11.1	10.9	10.8	12.6	12.6	10.5	10.0	10.0	13.4	13.4	13.4
LOS by Move:	B	B	B	B	B	B	B	B	B	B	B	B
ApproachDel:		11.1			12.3			10.1			13.4	
Delay Adj:		1.00			1.00			1.00			1.00	
ApprAdjDel:		11.1			12.3			10.1			13.4	
LOS by Appr:		B			B			B			B	
AllWayAvgQ:	0.4	0.4	0.4	0.2	0.6	0.6	0.0	0.1	0.1	0.7	0.7	0.7

Note: Queue reported is the number of cars per lane.

Traffix 8.0.0715 (c) 2008 Dowling Assoc. Licensed to CRAIN & ASSOC., L.A.

Level Of Service Computation Report
2000 HCM 4-Way Stop Method (Future Volume Alternative)

Intersection #4 Crescent Drive / Clifton Way

Cycle (sec):	100	Critical Vol./Cap.(X):	0.588
Loss Time (sec):	0	Average Delay (sec/veh):	14.4
Optimal Cycle:	0	Level Of Service:	B

Street Name:	Crescent Drive						Clifton Way					
Approach:	North Bound			South Bound			East Bound			West Bound		
Movement:	L -	T -	R	L -	T -	R	L -	T -	R	L -	T -	R
Control:	Stop Sign			Stop Sign			Stop Sign			Stop Sign		
Rights:	Include			Include			Include			Include		
Min. Green:	0	0	0	0	0	0	0	0	0	0	0	0
Lanes:	0 1	0 1	0	0 1	0 1	0	0 0	1! 0	0	0 0	1! 0	0
Volume Module:												
Base Vol:	38	365	81	47	520	72	41	56	33	24	52	59
Growth Adj:	1.00	1.00	1.00	1.00	1.00	1.00	1.00	1.00	1.00	1.00	1.00	1.00
Initial Bse:	38	365	81	47	520	72	41	56	33	24	52	59
Added Vol:	0	0	0	0	0	0	0	0	0	0	0	0
Project Tri:	0	0	0	0	6	19	0	0	0	0	0	0
Initial Fut:	38	365	81	47	526	91	41	56	33	24	52	59
User Adj:	1.00	1.00	1.00	1.00	1.00	1.00	1.00	1.00	1.00	1.00	1.00	1.00
PHF Adj:	0.97	0.97	0.97	0.97	0.97	0.97	0.97	0.97	0.97	0.97	0.97	0.97
PHF Volume:	39	376	83	48	541	94	42	58	34	25	53	61
Reduct Vol:	0	0	0	0	0	0	0	0	0	0	0	0
Reduced Vol:	39	376	83	48	541	94	42	58	34	25	53	61
PCE Adj:	1.00	1.00	1.00	1.00	1.00	1.00	1.00	1.00	1.00	1.00	1.00	1.00
MLF Adj:	1.00	1.00	1.00	1.00	1.00	1.00	1.00	1.00	1.00	1.00	1.00	1.00
FinalVolume:	39	376	83	48	541	94	42	58	34	25	53	61
Saturation Flow Module:												
Adjustment:	1.00	1.00	1.00	1.00	1.00	1.00	1.00	1.00	1.00	1.00	1.00	1.00
Lanes:	0.16	1.51	0.33	0.14	1.59	0.27	0.32	0.43	0.25	0.18	0.38	0.44
Final Sat.:	87	855	195	82	938	166	160	219	129	93	200	227
Capacity Analysis Module:												
Vol/Sat:	0.45	0.44	0.43	0.59	0.58	0.56	0.26	0.26	0.26	0.27	0.27	0.27
Crit Moves:	****			****			****			****		
Delay/Veh:	13.9	13.5	12.9	16.9	16.3	15.6	11.7	11.7	11.7	11.5	11.5	11.5
Delay Adj:	1.00	1.00	1.00	1.00	1.00	1.00	1.00	1.00	1.00	1.00	1.00	1.00
AdjDel/Veh:	13.9	13.5	12.9	16.9	16.3	15.6	11.7	11.7	11.7	11.5	11.5	11.5
LOS by Move:	B	B	B	C	C	C	B	B	B	B	B	B
ApproachDel:	13.4			16.2			11.7			11.5		
Delay Adj:	1.00			1.00			1.00			1.00		
ApprAdjDel:	13.4			16.2			11.7			11.5		
LOS by Appr:	B			C			B			B		
AllWayAvgQ:	0.7	0.7	0.7	1.3	1.2	1.2	0.3	0.3	0.3	0.3	0.3	0.3

Note: Queue reported is the number of cars per lane.

Traffix 8.0.0715 (c) 2008 Dowling Assoc. Licensed to CRAIN & ASSOC., L.A.

Level Of Service Computation Report
ICU 1(Loss as Cycle Length %) Method (Future Volume Alternative)

Intersection #1 Canon Drive/Dayton Way

Cycle (sec):	100	Critical Vol./Cap.(X):	0.649
Loss Time (sec):	33	Average Delay (sec/veh):	xxxxxx
Optimal Cycle:	77	Level Of Service:	B

Street Name:	Canon Drive						Dayton Way					
Approach:	North Bound			South Bound			East Bound			West Bound		
Movement:	L - T - R			L - T - R			L - T - R			L - T - R		
Control:	Permitted			Permitted			Permitted			Permitted		
Rights:	Include			Include			Include			Include		
Min. Green:	0	0	0	0	0	0	0	0	0	0	0	0
Y+R:	4.0	4.0	4.0	4.0	4.0	4.0	4.0	4.0	4.0	4.0	4.0	4.0
Lanes:	0 0	1 1	0	0 1	1 0	0	0 1	0 1	0	0 0	0 0	0
Volume Module:												
Base Vol:	0	255	81	87	356	0	84	262	122	0	0	0
Growth Adj:	1.00	1.00	1.00	1.00	1.00	1.00	1.00	1.00	1.00	1.00	1.00	1.00
Initial Bse:	0	255	81	87	356	0	84	262	122	0	0	0
Added Vol:	0	0	0	0	0	0	0	0	0	0	0	0
PasserByVol:	0	0	0	0	0	0	0	0	0	0	0	0
Initial Fut:	0	255	81	87	356	0	84	262	122	0	0	0
User Adj:	1.00	1.00	1.00	1.00	1.00	1.00	1.00	1.00	1.00	1.00	1.00	1.00
PHF Adj:	0.96	0.96	0.96	0.96	0.96	0.96	0.96	0.96	0.96	0.96	0.96	0.96
PHF Volume:	0	266	85	91	372	0	88	273	127	0	0	0
Reduct Vol:	0	0	0	0	0	0	0	0	0	0	0	0
Reduced Vol:	0	266	85	91	372	0	88	273	127	0	0	0
PCE Adj:	1.00	1.00	1.00	1.00	1.00	1.00	1.00	1.00	1.00	1.00	1.00	1.00
MLF Adj:	1.00	1.00	1.00	1.00	1.00	1.00	1.00	1.00	1.00	1.00	1.00	1.00
FinalVolume:	0	266	85	91	372	0	88	273	127	0	0	0
Saturation Flow Module:												
Sat/Lane:	1600	1600	1600	1600	1600	1600	1600	1600	1600	1600	1600	1600
Adjustment:	1.00	1.00	1.00	1.00	1.00	1.00	1.00	1.00	1.00	1.00	1.00	1.00
Lanes:	0.00	1.52	0.48	0.39	1.61	0.00	0.36	1.12	0.52	0.00	0.00	0.00
Final Sat.:	0	2429	771	628	2572	0	574	1791	834	0	0	0
Capacity Analysis Module:												
Vol/Sat:	0.00	0.11	0.11	0.06	0.14	0.00	0.05	0.15	0.15	0.00	0.00	0.00
Crit Moves:		****		****				****				

Level Of Service Computation Report
ICU 1(Loss as Cycle Length %) Method (Future Volume Alternative)

Intersection #2 Crescent Drive / Dayton Way

Cycle (sec):	100	Critical Vol./Cap.(X):	0.397
Loss Time (sec):	10	Average Delay (sec/veh):	xxxxxx
Optimal Cycle:	28	Level Of Service:	A

Street Name:	Crescent Drive						Dayton Way					
Approach:	North Bound			South Bound			East Bound			West Bound		
Movement:	L	T	R	L	T	R	L	T	R	L	T	R
Control:	Permitted			Permitted			Split Phase			Split Phase		
Rights:	Include			Include			Include			Include		
Min. Green:	0	0	0	0	0	0	0	0	0	0	0	0
Y+R:	4.0	4.0	4.0	4.0	4.0	4.0	4.0	4.0	4.0	4.0	4.0	4.0
Lanes:	0 0	1 1	0	0 1	1 0	0	1 0	1 0	1	0 0	1! 0	0
Volume Module:												
Base Vol:	0	343	31	22	377	0	142	146	112	34	0	56
Growth Adj:	1.00	1.00	1.00	1.00	1.00	1.00	1.00	1.00	1.00	1.00	1.00	1.00
Initial Bse:	0	343	31	22	377	0	142	146	112	34	0	56
Added Vol:	0	0	0	0	0	0	0	0	0	0	0	0
PasserByVol:	0	0	0	0	0	0	0	0	0	0	0	0
Initial Fut:	0	343	31	22	377	0	142	146	112	34	0	56
User Adj:	1.00	1.00	1.00	1.00	1.00	1.00	1.00	1.00	1.00	1.00	1.00	1.00
PHF Adj:	0.94	0.94	0.94	0.94	0.94	0.94	0.94	0.94	0.94	0.94	0.94	0.94
PHF Volume:	0	367	33	24	403	0	152	156	120	36	0	60
Reduct Vol:	0	0	0	0	0	0	0	0	0	0	0	0
Reduced Vol:	0	367	33	24	403	0	152	156	120	36	0	60
PCE Adj:	1.00	1.00	1.00	1.00	1.00	1.00	1.00	1.00	1.00	1.00	1.00	1.00
MLF Adj:	1.00	1.00	1.00	1.00	1.00	1.00	1.00	1.00	1.00	1.00	1.00	1.00
FinalVolume:	0	367	33	24	403	0	152	156	120	36	0	60
Saturation Flow Module:												
Sat/Lane:	1600	1600	1600	1600	1600	1600	1600	1600	1600	1600	1600	1600
Adjustment:	1.00	1.00	1.00	1.00	1.00	1.00	1.00	1.00	1.00	1.00	1.00	1.00
Lanes:	0.00	1.83	0.17	0.11	1.89	0.00	1.00	1.00	1.00	0.38	0.00	0.62
Final Sat.:	0	2935	265	176	3024	0	1600	1600	1600	604	0	996
Capacity Analysis Module:												
Vol/Sat:	0.00	0.13	0.13	0.01	0.13	0.00	0.09	0.10	0.07	0.06	0.00	0.06
Crit Moves:		****		****				****		****		

Level Of Service Computation Report
2000 HCM 4-Way Stop Method (Future Volume Alternative)

Intersection #3 Canon Drive / Clifton Way

Cycle (sec):	100	Critical Vol./Cap.(X):	0.506
Loss Time (sec):	0	Average Delay (sec/veh):	13.7
Optimal Cycle:	0	Level Of Service:	B

Street Name:	Canon Drive						Clifton Way					
Approach:	North Bound			South Bound			East Bound			West Bound		
Movement:	L - T - R			L - T - R			L - T - R			L - T - R		
Control:	Stop Sign			Stop Sign			Stop Sign			Stop Sign		
Rights:	Include			Include			Include			Include		
Min. Green:	0	0	0	0	0	0	0	0	0	0	0	0
Lanes:	0 1 0	1 0		1 0	1 1 0		1 0	0 1 0		0 0	1! 0 0	
Volume Module:												
Base Vol:	31	264	78	67	408	14	7	15	29	62	12	167
Growth Adj:	1.00	1.00	1.00	1.00	1.00	1.00	1.00	1.00	1.00	1.00	1.00	1.00
Initial Bse:	31	264	78	67	408	14	7	15	29	62	12	167
Added Vol:	0	0	0	0	0	0	0	0	0	0	0	0
PasserByVol:	0	0	0	0	0	0	0	0	0	0	0	0
Initial Fut:	31	264	78	67	408	14	7	15	29	62	12	167
User Adj:	1.00	1.00	1.00	1.00	1.00	1.00	1.00	1.00	1.00	1.00	1.00	1.00
PHF Adj:	0.89	0.89	0.89	0.89	0.89	0.89	0.89	0.89	0.89	0.89	0.89	0.89
PHF Volume:	35	298	88	76	461	16	8	17	33	70	14	189
Reduct Vol:	0	0	0	0	0	0	0	0	0	0	0	0
Reduced Vol:	35	298	88	76	461	16	8	17	33	70	14	189
PCE Adj:	1.00	1.00	1.00	1.00	1.00	1.00	1.00	1.00	1.00	1.00	1.00	1.00
MLF Adj:	1.00	1.00	1.00	1.00	1.00	1.00	1.00	1.00	1.00	1.00	1.00	1.00
FinalVolume:	35	298	88	76	461	16	8	17	33	70	14	189
Saturation Flow Module:												
Adjustment:	1.00	1.00	1.00	1.00	1.00	1.00	1.00	1.00	1.00	1.00	1.00	1.00
Lanes:	0.17	1.41	0.42	1.00	1.93	0.07	1.00	0.34	0.66	0.26	0.05	0.69
Final Sat.:	90	781	239	490	1027	35	415	160	309	138	27	373
Capacity Analysis Module:												
Vol/Sat:	0.39	0.38	0.37	0.15	0.45	0.45	0.02	0.11	0.11	0.51	0.51	0.51
Crit Moves:	****				****				****	****		
Delay/Veh:	13.0	12.7	12.1	11.1	14.4	14.3	10.8	10.4	10.4	15.4	15.4	15.4
Delay Adj:	1.00	1.00	1.00	1.00	1.00	1.00	1.00	1.00	1.00	1.00	1.00	1.00
AdjDel/Veh:	13.0	12.7	12.1	11.1	14.4	14.3	10.8	10.4	10.4	15.4	15.4	15.4
LOS by Move:	B	B	B	B	B	B	B	B	B	C	C	C
ApproachDel:		12.6			14.0			10.4			15.4	
Delay Adj:		1.00			1.00			1.00			1.00	
ApprAdjDel:		12.6			14.0			10.4			15.4	
LOS by Appr:		B			B			B			C	
AllWayAvgQ:	0.6	0.5	0.5	0.2	0.8	0.7	0.0	0.1	0.1	0.9	0.9	0.9

Note: Queue reported is the number of cars per lane.

Traffix 8.0.0715 (c) 2008 Dowling Assoc. Licensed to CRAIN & ASSOC., L.A.

Level Of Service Computation Report
2000 HCM 4-Way Stop Method (Future Volume Alternative)

Intersection #4 Crescent Drive / Clifton Way

Cycle (sec):	100	Critical Vol./Cap.(X):	0.472
Loss Time (sec):	0	Average Delay (sec/veh):	12.4
Optimal Cycle:	0	Level Of Service:	B

Street Name:	Crescent Drive						Clifton Way					
Approach:	North Bound			South Bound			East Bound			West Bound		
Movement:	L -	T -	R	L -	T -	R	L -	T -	R	L -	T -	R
Control:	Stop Sign			Stop Sign			Stop Sign			Stop Sign		
Rights:	Include			Include			Include			Include		
Min. Green:	0	0	0	0	0	0	0	0	0	0	0	0
Lanes:	0 1	0 1	0	0 1	0 1	0	0 0	1! 0	0	0 0	1! 0	0
Volume Module:												
Base Vol:	49	275	37	39	383	106	45	52	47	35	90	46
Growth Adj:	1.00	1.00	1.00	1.00	1.00	1.00	1.00	1.00	1.00	1.00	1.00	1.00
Initial Bse:	49	275	37	39	383	106	45	52	47	35	90	46
Added Vol:	0	0	0	0	0	0	0	0	0	0	0	0
PasserByVol:	0	0	0	0	0	0	0	0	0	0	0	0
Initial Fut:	49	275	37	39	383	106	45	52	47	35	90	46
User Adj:	1.00	1.00	1.00	1.00	1.00	1.00	1.00	1.00	1.00	1.00	1.00	1.00
PHF Adj:	0.97	0.97	0.97	0.97	0.97	0.97	0.97	0.97	0.97	0.97	0.97	0.97
PHF Volume:	51	285	38	40	396	110	47	54	49	36	93	48
Reduct Vol:	0	0	0	0	0	0	0	0	0	0	0	0
Reduced Vol:	51	285	38	40	396	110	47	54	49	36	93	48
PCE Adj:	1.00	1.00	1.00	1.00	1.00	1.00	1.00	1.00	1.00	1.00	1.00	1.00
MLF Adj:	1.00	1.00	1.00	1.00	1.00	1.00	1.00	1.00	1.00	1.00	1.00	1.00
FinalVolume:	51	285	38	40	396	110	47	54	49	36	93	48
Saturation Flow Module:												
Adjustment:	1.00	1.00	1.00	1.00	1.00	1.00	1.00	1.00	1.00	1.00	1.00	1.00
Lanes:	0.27	1.53	0.20	0.15	1.45	0.40	0.31	0.36	0.33	0.20	0.53	0.27
Final Sat.:	149	853	117	85	860	246	167	193	174	111	285	146
Capacity Analysis Module:												
Vol/Sat:	0.34	0.33	0.33	0.47	0.46	0.45	0.28	0.28	0.28	0.33	0.33	0.33
Crit Moves:	****			****					****		****	
Delay/Veh:	12.1	11.8	11.5	13.9	13.4	12.7	11.4	11.4	11.4	11.8	11.8	11.8
Delay Adj:	1.00	1.00	1.00	1.00	1.00	1.00	1.00	1.00	1.00	1.00	1.00	1.00
AdjDel/Veh:	12.1	11.8	11.5	13.9	13.4	12.7	11.4	11.4	11.4	11.8	11.8	11.8
LOS by Move:	B	B	B	B	B	B	B	B	B	B	B	B
ApproachDel:		11.8			13.3			11.4			11.8	
Delay Adj:		1.00			1.00			1.00			1.00	
ApprAdjDel:		11.8			13.3			11.4			11.8	
LOS by Appr:		B			B			B			B	
AllWayAvgQ:	0.5	0.4	0.4	0.8	0.7	0.7	0.3	0.3	0.3	0.4	0.4	0.4

Note: Queue reported is the number of cars per lane.

Traffix 8.0.0715 (c) 2008 Dowling Assoc. Licensed to CRAIN & ASSOC., L.A.

Level Of Service Computation Report
ICU 1(Loss as Cycle Length %) Method (Future Volume Alternative)

Intersection #1 Canon Drive/Dayton Way

Cycle (sec):	100	Critical Vol./Cap.(X):	0.792
Loss Time (sec):	33	Average Delay (sec/veh):	xxxxxx
Optimal Cycle:	97	Level Of Service:	C

Street Name:	Canon Drive						Dayton Way					
Approach:	North Bound			South Bound			East Bound			West Bound		
Movement:	L	T	R	L	T	R	L	T	R	L	T	R
Control:	Permitted			Permitted			Permitted			Permitted		
Rights:	Include			Include			Include			Include		
Min. Green:	0	0	0	0	0	0	0	0	0	0	0	0
Y+R:	4.0	4.0	4.0	4.0	4.0	4.0	4.0	4.0	4.0	4.0	4.0	4.0
Lanes:	0 0	1 1	0	0 1	1 0	0	0 1	0 1	0	0 0	0 0	0
Volume Module:												
Base Vol:	0	320	117	84	337	0	124	551	121	0	0	0
Growth Adj:	1.00	1.00	1.00	1.00	1.00	1.00	1.00	1.00	1.00	1.00	1.00	1.00
Initial Bse:	0	320	117	84	337	0	124	551	121	0	0	0
Added Vol:	0	0	0	0	0	0	0	0	0	0	0	0
PasserByVol:	0	0	0	0	0	0	0	0	0	0	0	0
Initial Fut:	0	320	117	84	337	0	124	551	121	0	0	0
User Adj:	1.00	1.00	1.00	1.00	1.00	1.00	1.00	1.00	1.00	1.00	1.00	1.00
PHF Adj:	0.95	0.95	0.95	0.95	0.95	0.95	0.95	0.95	0.95	0.95	0.95	0.95
PHF Volume:	0	338	123	89	355	0	131	581	128	0	0	0
Reduct Vol:	0	0	0	0	0	0	0	0	0	0	0	0
Reduced Vol:	0	338	123	89	355	0	131	581	128	0	0	0
PCE Adj:	1.00	1.00	1.00	1.00	1.00	1.00	1.00	1.00	1.00	1.00	1.00	1.00
MLF Adj:	1.00	1.00	1.00	1.00	1.00	1.00	1.00	1.00	1.00	1.00	1.00	1.00
FinalVolume:	0	338	123	89	355	0	131	581	128	0	0	0
Saturation Flow Module:												
Sat/Lane:	1600	1600	1600	1600	1600	1600	1600	1600	1600	1600	1600	1600
Adjustment:	1.00	1.00	1.00	1.00	1.00	1.00	1.00	1.00	1.00	1.00	1.00	1.00
Lanes:	0.00	1.46	0.54	0.40	1.60	0.00	0.31	1.39	0.30	0.00	0.00	0.00
Final Sat.:	0	2343	857	638	2562	0	498	2215	486	0	0	0
Capacity Analysis Module:												
Vol/Sat:	0.00	0.14	0.14	0.06	0.14	0.00	0.08	0.26	0.26	0.00	0.00	0.00
Crit Moves:		****		****				****				

Level Of Service Computation Report
ICU 1(Loss as Cycle Length %) Method (Future Volume Alternative)

Intersection #2 Crescent Drive / Dayton Way

Cycle (sec):	100	Critical Vol./Cap.(X):	0.626
Loss Time (sec):	10	Average Delay (sec/veh):	xxxxxx
Optimal Cycle:	42	Level Of Service:	B

Street Name:	Crescent Drive						Dayton Way					
Approach:	North Bound			South Bound			East Bound			West Bound		
Movement:	L - T - R			L - T - R			L - T - R			L - T - R		
Control:	Permitted			Permitted			Split Phase			Split Phase		
Rights:	Include			Include			Include			Include		
Min. Green:	0	0	0	0	0	0	0	0	0	0	0	0
Y+R:	4.0	4.0	4.0	4.0	4.0	4.0	4.0	4.0	4.0	4.0	4.0	4.0
Lanes:	0 0	1 1	0	0 1	1 0	0	1 0	1 0	1	0 0	1! 0	0
Volume Module:												
Base Vol:	0	429	42	53	393	0	159	406	166	34	0	32
Growth Adj:	1.00	1.00	1.00	1.00	1.00	1.00	1.00	1.00	1.00	1.00	1.00	1.00
Initial Bse:	0	429	42	53	393	0	159	406	166	34	0	32
Added Vol:	0	0	0	0	0	0	0	0	0	0	0	0
PasserByVol:	0	0	0	0	0	0	0	0	0	0	0	0
Initial Fut:	0	429	42	53	393	0	159	406	166	34	0	32
User Adj:	1.00	1.00	1.00	1.00	1.00	1.00	1.00	1.00	1.00	1.00	1.00	1.00
PHF Adj:	0.90	0.90	0.90	0.90	0.90	0.90	0.90	0.90	0.90	0.90	0.90	0.90
PHF Volume:	0	475	47	59	435	0	176	450	184	38	0	35
Reduct Vol:	0	0	0	0	0	0	0	0	0	0	0	0
Reduced Vol:	0	475	47	59	435	0	176	450	184	38	0	35
PCE Adj:	1.00	1.00	1.00	1.00	1.00	1.00	1.00	1.00	1.00	1.00	1.00	1.00
MLF Adj:	1.00	1.00	1.00	1.00	1.00	1.00	1.00	1.00	1.00	1.00	1.00	1.00
FinalVolume:	0	475	47	59	435	0	176	450	184	38	0	35
Saturation Flow Module:												
Sat/Lane:	1600	1600	1600	1600	1600	1600	1600	1600	1600	1600	1600	1600
Adjustment:	1.00	1.00	1.00	1.00	1.00	1.00	1.00	1.00	1.00	1.00	1.00	1.00
Lanes:	0.00	1.82	0.18	0.24	1.76	0.00	1.00	1.00	1.00	0.52	0.00	0.48
Final Sat.:	0	2915	285	380	2820	0	1600	1600	1600	824	0	776
Capacity Analysis Module:												
Vol/Sat:	0.00	0.16	0.16	0.04	0.15	0.00	0.11	0.28	0.11	0.05	0.00	0.05
Crit Moves:		****		****				****		****		

Level Of Service Computation Report
2000 HCM 4-Way Stop Method (Future Volume Alternative)

Intersection #3 Canon Drive / Clifton Way

Cycle (sec):	100	Critical Vol./Cap.(X):	0.420
Loss Time (sec):	0	Average Delay (sec/veh):	12.2
Optimal Cycle:	0	Level Of Service:	B

Street Name:	Canon Drive						Clifton Way					
Approach:	North Bound			South Bound			East Bound			West Bound		
Movement:	L	T	R	L	T	R	L	T	R	L	T	R
Control:	Stop Sign			Stop Sign			Stop Sign			Stop Sign		
Rights:	Include			Include			Include			Include		
Min. Green:	0	0	0	0	0	0	0	0	0	0	0	0
Lanes:	0 1	0 1	0	1 0	1 1	0	1 0	0 1	0	0 0	1! 0	0
Volume Module:												
Base Vol:	2	276	45	78	443	2	18	20	37	56	1	135
Growth Adj:	1.00	1.00	1.00	1.00	1.00	1.00	1.00	1.00	1.00	1.00	1.00	1.00
Initial Bse:	2	276	45	78	443	2	18	20	37	56	1	135
Added Vol:	0	0	0	0	0	0	0	0	0	0	0	0
PasserByVol:	0	0	0	0	0	0	0	0	0	0	0	0
Initial Fut:	2	276	45	78	443	2	18	20	37	56	1	135
User Adj:	1.00	1.00	1.00	1.00	1.00	1.00	1.00	1.00	1.00	1.00	1.00	1.00
PHF Adj:	0.94	0.94	0.94	0.94	0.94	0.94	0.94	0.94	0.94	0.94	0.94	0.94
PHF Volume:	2	292	48	83	469	2	19	21	39	59	1	143
Reduct Vol:	0	0	0	0	0	0	0	0	0	0	0	0
Reduced Vol:	2	292	48	83	469	2	19	21	39	59	1	143
PCE Adj:	1.00	1.00	1.00	1.00	1.00	1.00	1.00	1.00	1.00	1.00	1.00	1.00
MLF Adj:	1.00	1.00	1.00	1.00	1.00	1.00	1.00	1.00	1.00	1.00	1.00	1.00
FinalVolume:	2	292	48	83	469	2	19	21	39	59	1	143
Saturation Flow Module:												
Adjustment:	1.00	1.00	1.00	1.00	1.00	1.00	1.00	1.00	1.00	1.00	1.00	1.00
Lanes:	0.01	1.71	0.28	1.00	1.99	0.01	1.00	0.35	0.65	0.29	0.01	0.70
Final Sat.:	7	974	162	519	1118	5	441	176	325	159	3	382
Capacity Analysis Module:												
Vol/Sat:	0.30	0.30	0.29	0.16	0.42	0.42	0.04	0.12	0.12	0.37	0.37	0.37
Crit Moves:	****				****			****		****		
Delay/Veh:	11.4	11.2	11.0	10.7	13.3	13.2	10.5	10.1	10.1	12.8	12.8	12.8
Delay Adj:	1.00	1.00	1.00	1.00	1.00	1.00	1.00	1.00	1.00	1.00	1.00	1.00
AdjDel/Veh:	11.4	11.2	11.0	10.7	13.3	13.2	10.5	10.1	10.1	12.8	12.8	12.8
LOS by Move:	B	B	B	B	B	B	B	B	B	B	B	B
ApproachDel:		11.2			12.9			10.2			12.8	
Delay Adj:		1.00			1.00			1.00			1.00	
ApprAdjDel:		11.2			12.9			10.2			12.8	
LOS by Appr:		B			B			B			B	
AllWayAvgQ:	0.4	0.4	0.4	0.2	0.7	0.7	0.0	0.1	0.1	0.5	0.5	0.5

Note: Queue reported is the number of cars per lane.

Traffix 8.0.0715 (c) 2008 Dowling Assoc. Licensed to CRAIN & ASSOC., L.A.

Level Of Service Computation Report
2000 HCM 4-Way Stop Method (Future Volume Alternative)

Intersection #4 Crescent Drive / Clifton Way

Cycle (sec):	100	Critical Vol./Cap.(X):	0.581
Loss Time (sec):	0	Average Delay (sec/veh):	14.4
Optimal Cycle:	0	Level Of Service:	B

Street Name:	Crescent Drive						Clifton Way					
Approach:	North Bound			South Bound			East Bound			West Bound		
Movement:	L - T - R			L - T - R			L - T - R			L - T - R		
Control:	Stop Sign			Stop Sign			Stop Sign			Stop Sign		
Rights:	Include			Include			Include			Include		
Min. Green:	0	0	0	0	0	0	0	0	0	0	0	0
Lanes:	0 1	0 1	0	0 1	0 1	0	0 0	1! 0	0	0 0	1! 0	0
Volume Module:												
Base Vol:	39	372	83	48	530	73	42	57	34	24	53	60
Growth Adj:	1.00	1.00	1.00	1.00	1.00	1.00	1.00	1.00	1.00	1.00	1.00	1.00
Initial Bse:	39	372	83	48	530	73	42	57	34	24	53	60
Added Vol:	0	0	0	0	0	0	0	0	0	0	0	0
PasserByVol:	0	0	0	0	0	0	0	0	0	0	0	0
Initial Fut:	39	372	83	48	530	73	42	57	34	24	53	60
User Adj:	1.00	1.00	1.00	1.00	1.00	1.00	1.00	1.00	1.00	1.00	1.00	1.00
PHF Adj:	0.97	0.97	0.97	0.97	0.97	0.97	0.97	0.97	0.97	0.97	0.97	0.97
PHF Volume:	40	383	85	49	545	75	43	59	35	25	55	62
Reduct Vol:	0	0	0	0	0	0	0	0	0	0	0	0
Reduced Vol:	40	383	85	49	545	75	43	59	35	25	55	62
PCE Adj:	1.00	1.00	1.00	1.00	1.00	1.00	1.00	1.00	1.00	1.00	1.00	1.00
MLF Adj:	1.00	1.00	1.00	1.00	1.00	1.00	1.00	1.00	1.00	1.00	1.00	1.00
FinalVolume:	40	383	85	49	545	75	43	59	35	25	55	62
Saturation Flow Module:												
Adjustment:	1.00	1.00	1.00	1.00	1.00	1.00	1.00	1.00	1.00	1.00	1.00	1.00
Lanes:	0.16	1.51	0.33	0.15	1.63	0.22	0.32	0.43	0.25	0.17	0.39	0.44
Final Sat.:	87	852	195	85	956	134	160	218	130	91	201	227
Capacity Analysis Module:												
Vol/Sat:	0.46	0.45	0.44	0.58	0.57	0.56	0.27	0.27	0.27	0.27	0.27	0.27
Crit Moves:	****			****					****		****	
Delay/Veh:	14.1	13.7	13.1	16.7	16.2	15.6	11.8	11.8	11.8	11.6	11.6	11.6
Delay Adj:	1.00	1.00	1.00	1.00	1.00	1.00	1.00	1.00	1.00	1.00	1.00	1.00
AdjDel/Veh:	14.1	13.7	13.1	16.7	16.2	15.6	11.8	11.8	11.8	11.6	11.6	11.6
LOS by Move:	B	B	B	C	C	C	B	B	B	B	B	B
ApproachDel:		13.6			16.2			11.8			11.6	
Delay Adj:		1.00			1.00			1.00			1.00	
ApprAdjDel:		13.6			16.2			11.8			11.6	
LOS by Appr:		B			C			B			B	
AllWayAvgQ:	0.8	0.7	0.7	1.3	1.2	1.2	0.3	0.3	0.3	0.3	0.3	0.3

Note: Queue reported is the number of cars per lane.

Traffix 8.0.0715 (c) 2008 Dowling Assoc. Licensed to CRAIN & ASSOC., L.A.

Level Of Service Computation Report
ICU 1(Loss as Cycle Length %) Method (Future Volume Alternative)

Intersection #1 Canon Drive/Dayton Way

Cycle (sec):	100	Critical Vol./Cap.(X):	0.664
Loss Time (sec):	33	Average Delay (sec/veh):	xxxxxx
Optimal Cycle:	78	Level Of Service:	B

Street Name:	Canon Drive						Dayton Way					
Approach:	North Bound			South Bound			East Bound			West Bound		
Movement:	L - T - R			L - T - R			L - T - R			L - T - R		
Control:	Permitted			Permitted			Permitted			Permitted		
Rights:	Include			Include			Include			Include		
Min. Green:	0	0	0	0	0	0	0	0	0	0	0	0
Y+R:	4.0	4.0	4.0	4.0	4.0	4.0	4.0	4.0	4.0	4.0	4.0	4.0
Lanes:	0 0	1 1	0	0 1	1 0	0	0 1	0 1	0	0 0	0 0	0
Volume Module:												
Base Vol:	0	255	81	87	356	0	84	262	122	0	0	0
Growth Adj:	1.00	1.00	1.00	1.00	1.00	1.00	1.00	1.00	1.00	1.00	1.00	1.00
Initial Bse:	0	255	81	87	356	0	84	262	122	0	0	0
Added Vol:	0	0	0	0	0	0	0	0	0	0	0	0
Project Tri:	0	4	31	6	0	0	0	0	0	0	0	0
Initial Fut:	0	259	112	93	356	0	84	262	122	0	0	0
User Adj:	1.00	1.00	1.00	1.00	1.00	1.00	1.00	1.00	1.00	1.00	1.00	1.00
PHF Adj:	0.96	0.96	0.96	0.96	0.96	0.96	0.96	0.96	0.96	0.96	0.96	0.96
PHF Volume:	0	270	117	97	372	0	88	273	127	0	0	0
Reduct Vol:	0	0	0	0	0	0	0	0	0	0	0	0
Reduced Vol:	0	270	117	97	372	0	88	273	127	0	0	0
PCE Adj:	1.00	1.00	1.00	1.00	1.00	1.00	1.00	1.00	1.00	1.00	1.00	1.00
MLF Adj:	1.00	1.00	1.00	1.00	1.00	1.00	1.00	1.00	1.00	1.00	1.00	1.00
FinalVolume:	0	270	117	97	372	0	88	273	127	0	0	0
Saturation Flow Module:												
Sat/Lane:	1600	1600	1600	1600	1600	1600	1600	1600	1600	1600	1600	1600
Adjustment:	1.00	1.00	1.00	1.00	1.00	1.00	1.00	1.00	1.00	1.00	1.00	1.00
Lanes:	0.00	1.40	0.60	0.41	1.59	0.00	0.36	1.12	0.52	0.00	0.00	0.00
Final Sat.:	0	2234	966	663	2537	0	574	1791	834	0	0	0
Capacity Analysis Module:												
Vol/Sat:	0.00	0.12	0.12	0.06	0.15	0.00	0.05	0.15	0.15	0.00	0.00	0.00
Crit Moves:		****		****				****				

Traffix 8.0.0715 (c) 2008 Dowling Assoc. Licensed to CRAIN & ASSOC., L.A.

Level Of Service Computation Report
ICU 1(Loss as Cycle Length %) Method (Future Volume Alternative)

Intersection #2 Crescent Drive / Dayton Way

Cycle (sec):	100	Critical Vol./Cap.(X):	0.393
Loss Time (sec):	10	Average Delay (sec/veh):	xxxxxx
Optimal Cycle:	28	Level Of Service:	A

Street Name:	Crescent Drive						Dayton Way					
Approach:	North Bound			South Bound			East Bound			West Bound		
Movement:	L	T	R	L	T	R	L	T	R	L	T	R
Control:	Permitted			Permitted			Split Phase			Split Phase		
Rights:	Include			Include			Include			Include		
Min. Green:	0	0	0	0	0	0	0	0	0	0	0	0
Y+R:	4.0	4.0	4.0	4.0	4.0	4.0	4.0	4.0	4.0	4.0	4.0	4.0
Lanes:	0 0	1 1	0	0 1	1 0	0	1 0	1 0	1	0 0	1! 0	0
Volume Module:												
Base Vol:	0	343	31	22	377	0	142	146	112	34	0	56
Growth Adj:	1.00	1.00	1.00	1.00	1.00	1.00	1.00	1.00	1.00	1.00	1.00	1.00
Initial Bse:	0	343	31	22	377	0	142	146	112	34	0	56
Added Vol:	0	0	0	0	0	0	0	0	0	0	0	0
Project Tri:	0	0	0	0	5	0	1	1	10	0	0	0
Initial Fut:	0	343	31	22	382	0	143	147	122	34	0	56
User Adj:	1.00	1.00	1.00	1.00	1.00	1.00	1.00	1.00	1.00	1.00	1.00	1.00
PHF Adj:	0.94	0.94	0.94	0.94	0.94	0.94	0.94	0.94	0.94	0.94	0.94	0.94
PHF Volume:	0	367	33	24	409	0	153	157	130	36	0	60
Reduct Vol:	0	0	0	0	0	0	0	0	0	0	0	0
Reduced Vol:	0	367	33	24	409	0	153	157	130	36	0	60
PCE Adj:	1.00	1.00	1.00	1.00	1.00	1.00	1.00	1.00	1.00	1.00	1.00	1.00
MLF Adj:	1.00	1.00	1.00	1.00	1.00	1.00	1.00	1.00	1.00	1.00	1.00	1.00
FinalVolume:	0	367	33	24	409	0	153	157	130	36	0	60
Saturation Flow Module:												
Sat/Lane:	1600	1600	1600	1600	1600	1600	1600	1600	1600	1600	1600	1600
Adjustment:	1.00	1.00	1.00	1.00	1.00	1.00	1.00	1.00	1.00	1.00	1.00	1.00
Lanes:	0.00	1.83	0.17	0.11	1.89	0.00	1.00	1.00	1.00	0.38	0.00	0.62
Final Sat.:	0	2935	265	174	3026	0	1600	1600	1600	604	0	996
Capacity Analysis Module:												
Vol/Sat:	0.00	0.13	0.13	0.01	0.14	0.00	0.10	0.10	0.08	0.06	0.00	0.06
Crit Moves:	****				****			****		****		

Traffix 8.0.0715 (c) 2008 Dowling Assoc. Licensed to CRAIN & ASSOC., L.A.

Level Of Service Computation Report
2000 HCM 4-Way Stop Method (Future Volume Alternative)

Intersection #3 Canon Drive / Clifton Way

Cycle (sec):	100	Critical Vol./Cap.(X):	0.553
Loss Time (sec):	0	Average Delay (sec/veh):	14.3
Optimal Cycle:	0	Level Of Service:	B

Street Name:	Canon Drive						Clifton Way					
Approach:	North Bound			South Bound			East Bound			West Bound		
Movement:	L - T - R			L - T - R			L - T - R			L - T - R		
Control:	Stop Sign			Stop Sign			Stop Sign			Stop Sign		
Rights:	Include			Include			Include			Include		
Min. Green:	0	0	0	0	0	0	0	0	0	0	0	0
Lanes:	0 1 0 1 0			1 0 1 1 0			1 0 0 1 0			0 0 1! 0 0		
Volume Module:												
Base Vol:	31	264	78	67	408	14	7	15	29	62	12	167
Growth Adj:	1.00	1.00	1.00	1.00	1.00	1.00	1.00	1.00	1.00	1.00	1.00	1.00
Initial Bse:	31	264	78	67	408	14	7	15	29	62	12	167
Added Vol:	0	0	0	0	0	0	0	0	0	0	0	0
Project Tri:	0	14	0	0	0	0	0	0	0	1	0	21
Initial Fut:	31	278	78	67	408	14	7	15	29	63	12	188
User Adj:	1.00	1.00	1.00	1.00	1.00	1.00	1.00	1.00	1.00	1.00	1.00	1.00
PHF Adj:	0.89	0.89	0.89	0.89	0.89	0.89	0.89	0.89	0.89	0.89	0.89	0.89
PHF Volume:	35	314	88	76	461	16	8	17	33	71	14	212
Reduct Vol:	0	0	0	0	0	0	0	0	0	0	0	0
Reduced Vol:	35	314	88	76	461	16	8	17	33	71	14	212
PCE Adj:	1.00	1.00	1.00	1.00	1.00	1.00	1.00	1.00	1.00	1.00	1.00	1.00
MLF Adj:	1.00	1.00	1.00	1.00	1.00	1.00	1.00	1.00	1.00	1.00	1.00	1.00
FinalVolume:	35	314	88	76	461	16	8	17	33	71	14	212
Saturation Flow Module:												
Adjustment:	1.00	1.00	1.00	1.00	1.00	1.00	1.00	1.00	1.00	1.00	1.00	1.00
Lanes:	0.16	1.44	0.40	1.00	1.93	0.07	1.00	0.34	0.66	0.24	0.05	0.71
Final Sat.:	85	779	226	481	1004	35	409	157	303	129	25	384
Capacity Analysis Module:												
Vol/Sat:	0.41	0.40	0.39	0.16	0.46	0.46	0.02	0.11	0.11	0.55	0.55	0.55
Crit Moves:	****				****				****	****		
Delay/Veh:	13.6	13.2	12.6	11.3	14.9	14.8	10.9	10.5	10.5	16.7	16.7	16.7
Delay Adj:	1.00	1.00	1.00	1.00	1.00	1.00	1.00	1.00	1.00	1.00	1.00	1.00
AdjDel/Veh:	13.6	13.2	12.6	11.3	14.9	14.8	10.9	10.5	10.5	16.7	16.7	16.7
LOS by Move:	B	B	B	B	B	B	B	B	B	C	C	C
ApproachDel:	13.1			14.4			10.6			16.7		
Delay Adj:	1.00			1.00			1.00			1.00		
ApprAdjDel:	13.1			14.4			10.6			16.7		
LOS by Appr:	B			B			B			C		
AllWayAvgQ:	0.6	0.6	0.6	0.2	0.8	0.8	0.0	0.1	0.1	1.1	1.1	1.1

Note: Queue reported is the number of cars per lane.

Traffix 8.0.0715 (c) 2008 Dowling Assoc. Licensed to CRAIN & ASSOC., L.A.

Level Of Service Computation Report
2000 HCM 4-Way Stop Method (Future Volume Alternative)

Intersection #4 Crescent Drive / Clifton Way

Cycle (sec):	100	Critical Vol./Cap.(X):	0.486
Loss Time (sec):	0	Average Delay (sec/veh):	12.6
Optimal Cycle:	0	Level Of Service:	B

Street Name:	Crescent Drive						Clifton Way					
Approach:	North Bound			South Bound			East Bound			West Bound		
Movement:	L - T - R			L - T - R			L - T - R			L - T - R		
Control:	Stop Sign			Stop Sign			Stop Sign			Stop Sign		
Rights:	Include			Include			Include			Include		
Min. Green:	0	0	0	0	0	0	0	0	0	0	0	0
Lanes:	0 1 0 1 0			0 1 0 1 0			0 0 1! 0 0			0 0 1! 0 0		
Volume Module:												
Base Vol:	49	275	37	39	383	106	45	52	47	35	90	46
Growth Adj:	1.00	1.00	1.00	1.00	1.00	1.00	1.00	1.00	1.00	1.00	1.00	1.00
Initial Bse:	49	275	37	39	383	106	45	52	47	35	90	46
Added Vol:	0	0	0	0	0	0	0	0	0	0	0	0
Project Tri:	0	0	0	0	3	12	0	0	0	0	0	0
Initial Fut:	49	275	37	39	386	118	45	52	47	35	90	46
User Adj:	1.00	1.00	1.00	1.00	1.00	1.00	1.00	1.00	1.00	1.00	1.00	1.00
PHF Adj:	0.97	0.97	0.97	0.97	0.97	0.97	0.97	0.97	0.97	0.97	0.97	0.97
PHF Volume:	51	285	38	40	400	122	47	54	49	36	93	48
Reduct Vol:	0	0	0	0	0	0	0	0	0	0	0	0
Reduced Vol:	51	285	38	40	400	122	47	54	49	36	93	48
PCE Adj:	1.00	1.00	1.00	1.00	1.00	1.00	1.00	1.00	1.00	1.00	1.00	1.00
MLF Adj:	1.00	1.00	1.00	1.00	1.00	1.00	1.00	1.00	1.00	1.00	1.00	1.00
FinalVolume:	51	285	38	40	400	122	47	54	49	36	93	48
Saturation Flow Module:												
Adjustment:	1.00	1.00	1.00	1.00	1.00	1.00	1.00	1.00	1.00	1.00	1.00	1.00
Lanes:	0.27	1.53	0.20	0.14	1.43	0.43	0.31	0.36	0.33	0.20	0.53	0.27
Final Sat.:	148	850	117	83	843	268	166	192	173	111	285	146
Capacity Analysis Module:												
Vol/Sat:	0.34	0.33	0.33	0.49	0.47	0.46	0.28	0.28	0.28	0.33	0.33	0.33
Crit Moves:	****			****				****			****	
Delay/Veh:	12.2	11.9	11.6	14.2	13.7	12.9	11.4	11.4	11.4	11.9	11.9	11.9
Delay Adj:	1.00	1.00	1.00	1.00	1.00	1.00	1.00	1.00	1.00	1.00	1.00	1.00
AdjDel/Veh:	12.2	11.9	11.6	14.2	13.7	12.9	11.4	11.4	11.4	11.9	11.9	11.9
LOS by Move:	B	B	B	B	B	B	B	B	B	B	B	B
ApproachDel:		11.9			13.5			11.4			11.9	
Delay Adj:		1.00			1.00			1.00			1.00	
ApprAdjDel:		11.9			13.5			11.4			11.9	
LOS by Appr:		B			B			B			B	
AllWayAvgQ:	0.5	0.4	0.4	0.9	0.8	0.8	0.3	0.3	0.3	0.4	0.4	0.4

Note: Queue reported is the number of cars per lane.

Traffix 8.0.0715 (c) 2008 Dowling Assoc. Licensed to CRAIN & ASSOC., L.A.

Level Of Service Computation Report
ICU 1(Loss as Cycle Length %) Method (Future Volume Alternative)

Intersection #1 Canon Drive/Dayton Way

Cycle (sec):	100	Critical Vol./Cap.(X):	0.817
Loss Time (sec):	33	Average Delay (sec/veh):	xxxxxx
Optimal Cycle:	102	Level Of Service:	D

Street Name:	Canon Drive						Dayton Way					
Approach:	North Bound			South Bound			East Bound			West Bound		
Movement:	L -	T -	R	L -	T -	R	L -	T -	R	L -	T -	R
Control:	Permitted			Permitted			Permitted			Permitted		
Rights:	Include			Include			Include			Include		
Min. Green:	0	0	0	0	0	0	0	0	0	0	0	0
Y+R:	4.0	4.0	4.0	4.0	4.0	4.0	4.0	4.0	4.0	4.0	4.0	4.0
Lanes:	0 0	1 1	0	0 1	1 0	0	0 1	0 1	0	0 0	0 0	0
Volume Module:												
Base Vol:	0	320	117	84	337	0	124	551	121	0	0	0
Growth Adj:	1.00	1.00	1.00	1.00	1.00	1.00	1.00	1.00	1.00	1.00	1.00	1.00
Initial Bse:	0	320	117	84	337	0	124	551	121	0	0	0
Added Vol:	0	0	0	0	0	0	0	0	0	0	0	0
Project Tri:	0	8	48	10	0	0	0	0	0	0	0	0
Initial Fut:	0	328	165	94	337	0	124	551	121	0	0	0
User Adj:	1.00	1.00	1.00	1.00	1.00	1.00	1.00	1.00	1.00	1.00	1.00	1.00
PHF Adj:	0.95	0.95	0.95	0.95	0.95	0.95	0.95	0.95	0.95	0.95	0.95	0.95
PHF Volume:	0	346	174	99	355	0	131	581	128	0	0	0
Reduct Vol:	0	0	0	0	0	0	0	0	0	0	0	0
Reduced Vol:	0	346	174	99	355	0	131	581	128	0	0	0
PCE Adj:	1.00	1.00	1.00	1.00	1.00	1.00	1.00	1.00	1.00	1.00	1.00	1.00
MLF Adj:	1.00	1.00	1.00	1.00	1.00	1.00	1.00	1.00	1.00	1.00	1.00	1.00
FinalVolume:	0	346	174	99	355	0	131	581	128	0	0	0
Saturation Flow Module:												
Sat/Lane:	1600	1600	1600	1600	1600	1600	1600	1600	1600	1600	1600	1600
Adjustment:	1.00	1.00	1.00	1.00	1.00	1.00	1.00	1.00	1.00	1.00	1.00	1.00
Lanes:	0.00	1.33	0.67	0.44	1.56	0.00	0.31	1.39	0.30	0.00	0.00	0.00
Final Sat.:	0	2129	1071	698	2502	0	498	2215	486	0	0	0
Capacity Analysis Module:												
Vol/Sat:	0.00	0.16	0.16	0.06	0.14	0.00	0.08	0.26	0.26	0.00	0.00	0.00
Crit Moves:		****		****				****				

Traffix 8.0.0715 (c) 2008 Dowling Assoc. Licensed to CRAIN & ASSOC., L.A.

Level Of Service Computation Report
ICU 1(Loss as Cycle Length %) Method (Future Volume Alternative)

Intersection #2 Crescent Drive / Dayton Way

Cycle (sec):	100	Critical Vol./Cap.(X):	0.627
Loss Time (sec):	10	Average Delay (sec/veh):	xxxxxx
Optimal Cycle:	42	Level Of Service:	B

Street Name:	Crescent Drive						Dayton Way					
Approach:	North Bound			South Bound			East Bound			West Bound		
Movement:	L -	T -	R	L -	T -	R	L -	T -	R	L -	T -	R
Control:	Permitted			Permitted			Split Phase			Split Phase		
Rights:	Include			Include			Include			Include		
Min. Green:	0	0	0	0	0	0	0	0	0	0	0	0
Y+R:	4.0	4.0	4.0	4.0	4.0	4.0	4.0	4.0	4.0	4.0	4.0	4.0
Lanes:	0 0	1 1	0	0 1	1 0	0	1 0	1 0	1	0 0	1! 0	0
Volume Module:												
Base Vol:	0	429	42	53	393	0	159	406	166	34	0	32
Growth Adj:	1.00	1.00	1.00	1.00	1.00	1.00	1.00	1.00	1.00	1.00	1.00	1.00
Initial Bse:	0	429	42	53	393	0	159	406	166	34	0	32
Added Vol:	0	0	0	0	0	0	0	0	0	0	0	0
Project Tri:	0	0	0	0	8	0	2	1	17	0	0	0
Initial Fut:	0	429	42	53	401	0	161	407	183	34	0	32
User Adj:	1.00	1.00	1.00	1.00	1.00	1.00	1.00	1.00	1.00	1.00	1.00	1.00
PHF Adj:	0.90	0.90	0.90	0.90	0.90	0.90	0.90	0.90	0.90	0.90	0.90	0.90
PHF Volume:	0	475	47	59	444	0	178	451	203	38	0	35
Reduct Vol:	0	0	0	0	0	0	0	0	0	0	0	0
Reduced Vol:	0	475	47	59	444	0	178	451	203	38	0	35
PCE Adj:	1.00	1.00	1.00	1.00	1.00	1.00	1.00	1.00	1.00	1.00	1.00	1.00
MLF Adj:	1.00	1.00	1.00	1.00	1.00	1.00	1.00	1.00	1.00	1.00	1.00	1.00
FinalVolume:	0	475	47	59	444	0	178	451	203	38	0	35
Saturation Flow Module:												
Sat/Lane:	1600	1600	1600	1600	1600	1600	1600	1600	1600	1600	1600	1600
Adjustment:	1.00	1.00	1.00	1.00	1.00	1.00	1.00	1.00	1.00	1.00	1.00	1.00
Lanes:	0.00	1.82	0.18	0.23	1.77	0.00	1.00	1.00	1.00	0.52	0.00	0.48
Final Sat.:	0	2915	285	374	2826	0	1600	1600	1600	824	0	776
Capacity Analysis Module:												
Vol/Sat:	0.00	0.16	0.16	0.04	0.16	0.00	0.11	0.28	0.13	0.05	0.00	0.05
Crit Moves:		****		****				****		****		

Traffix 8.0.0715 (c) 2008 Dowling Assoc. Licensed to CRAIN & ASSOC., L.A.

Level Of Service Computation Report
2000 HCM 4-Way Stop Method (Future Volume Alternative)

Intersection #3 Canon Drive / Clifton Way

Cycle (sec):	100	Critical Vol./Cap.(X):	0.448
Loss Time (sec):	0	Average Delay (sec/veh):	12.9
Optimal Cycle:	0	Level Of Service:	B

Street Name:	Canon Drive						Clifton Way					
Approach:	North Bound			South Bound			East Bound			West Bound		
Movement:	L -	T -	R	L -	T -	R	L -	T -	R	L -	T -	R
Control:	Stop Sign			Stop Sign			Stop Sign			Stop Sign		
Rights:	Include			Include			Include			Include		
Min. Green:	0	0	0	0	0	0	0	0	0	0	0	0
Lanes:	0 1 0	1 0	0	1 0	1 1	0	1 0	0 1	0	0 0	1! 0	0
Volume Module:												
Base Vol:	2	276	45	78	443	2	18	20	37	56	1	135
Growth Adj:	1.00	1.00	1.00	1.00	1.00	1.00	1.00	1.00	1.00	1.00	1.00	1.00
Initial Bse:	2	276	45	78	443	2	18	20	37	56	1	135
Added Vol:	0	0	0	0	0	0	0	0	0	0	0	0
Project Tri:	0	21	0	0	0	0	0	0	0	2	0	35
Initial Fut:	2	297	45	78	443	2	18	20	37	58	1	170
User Adj:	1.00	1.00	1.00	1.00	1.00	1.00	1.00	1.00	1.00	1.00	1.00	1.00
PHF Adj:	0.94	0.94	0.94	0.94	0.94	0.94	0.94	0.94	0.94	0.94	0.94	0.94
PHF Volume:	2	315	48	83	469	2	19	21	39	61	1	180
Reduct Vol:	0	0	0	0	0	0	0	0	0	0	0	0
Reduced Vol:	2	315	48	83	469	2	19	21	39	61	1	180
PCE Adj:	1.00	1.00	1.00	1.00	1.00	1.00	1.00	1.00	1.00	1.00	1.00	1.00
MLF Adj:	1.00	1.00	1.00	1.00	1.00	1.00	1.00	1.00	1.00	1.00	1.00	1.00
FinalVolume:	2	315	48	83	469	2	19	21	39	61	1	180
Saturation Flow Module:												
Adjustment:	1.00	1.00	1.00	1.00	1.00	1.00	1.00	1.00	1.00	1.00	1.00	1.00
Lanes:	0.01	1.73	0.26	1.00	1.99	0.01	1.00	0.35	0.65	0.25	0.01	0.74
Final Sat.:	6	957	147	502	1080	5	430	170	315	137	2	402
Capacity Analysis Module:												
Vol/Sat:	0.33	0.33	0.32	0.16	0.43	0.43	0.04	0.12	0.12	0.45	0.45	0.45
Crit Moves:	****				****			****			****	
Delay/Veh:	12.0	11.8	11.6	11.0	13.9	13.9	10.7	10.3	10.3	14.0	14.0	14.0
Delay Adj:	1.00	1.00	1.00	1.00	1.00	1.00	1.00	1.00	1.00	1.00	1.00	1.00
AdjDel/Veh:	12.0	11.8	11.6	11.0	13.9	13.9	10.7	10.3	10.3	14.0	14.0	14.0
LOS by Move:	B	B	B	B	B	B	B	B	B	B	B	B
ApproachDel:		11.8			13.4			10.4			14.0	
Delay Adj:		1.00			1.00			1.00			1.00	
ApprAdjDel:		11.8			13.4			10.4			14.0	
LOS by Appr:		B			B			B			B	
AllWayAvgQ:	0.4	0.4	0.4	0.2	0.7	0.7	0.0	0.1	0.1	0.7	0.7	0.7

Note: Queue reported is the number of cars per lane.

Traffix 8.0.0715 (c) 2008 Dowling Assoc. Licensed to CRAIN & ASSOC., L.A.

Level Of Service Computation Report
2000 HCM 4-Way Stop Method (Future Volume Alternative)

Intersection #4 Crescent Drive / Clifton Way

Cycle (sec):	100	Critical Vol./Cap.(X):	0.603
Loss Time (sec):	0	Average Delay (sec/veh):	14.8
Optimal Cycle:	0	Level Of Service:	B

Street Name:	Crescent Drive						Clifton Way					
Approach:	North Bound			South Bound			East Bound			West Bound		
Movement:	L - T - R			L - T - R			L - T - R			L - T - R		
Control:	Stop Sign			Stop Sign			Stop Sign			Stop Sign		
Rights:	Include			Include			Include			Include		
Min. Green:	0	0	0	0	0	0	0	0	0	0	0	0
Lanes:	0 1 0 1 0			0 1 0 1 0			0 0 1! 0 0			0 0 1! 0 0		
Volume Module:												
Base Vol:	39	372	83	48	530	73	42	57	34	24	53	60
Growth Adj:	1.00	1.00	1.00	1.00	1.00	1.00	1.00	1.00	1.00	1.00	1.00	1.00
Initial Bse:	39	372	83	48	530	73	42	57	34	24	53	60
Added Vol:	0	0	0	0	0	0	0	0	0	0	0	0
Project Tri:	0	0	0	0	6	19	0	0	0	0	0	0
Initial Fut:	39	372	83	48	536	92	42	57	34	24	53	60
User Adj:	1.00	1.00	1.00	1.00	1.00	1.00	1.00	1.00	1.00	1.00	1.00	1.00
PHF Adj:	0.97	0.97	0.97	0.97	0.97	0.97	0.97	0.97	0.97	0.97	0.97	0.97
PHF Volume:	40	383	85	49	551	95	43	59	35	25	55	62
Reduct Vol:	0	0	0	0	0	0	0	0	0	0	0	0
Reduced Vol:	40	383	85	49	551	95	43	59	35	25	55	62
PCE Adj:	1.00	1.00	1.00	1.00	1.00	1.00	1.00	1.00	1.00	1.00	1.00	1.00
MLF Adj:	1.00	1.00	1.00	1.00	1.00	1.00	1.00	1.00	1.00	1.00	1.00	1.00
FinalVolume:	40	383	85	49	551	95	43	59	35	25	55	62
Saturation Flow Module:												
Adjustment:	1.00	1.00	1.00	1.00	1.00	1.00	1.00	1.00	1.00	1.00	1.00	1.00
Lanes:	0.16	1.51	0.33	0.14	1.59	0.27	0.32	0.43	0.25	0.17	0.39	0.44
Final Sat.:	87	847	194	82	933	164	160	217	129	90	200	226
Capacity Analysis Module:												
Vol/Sat:	0.46	0.45	0.44	0.60	0.59	0.58	0.27	0.27	0.27	0.27	0.27	0.27
Crit Moves:	****			****				****			****	
Delay/Veh:	14.2	13.8	13.2	17.5	16.8	16.1	11.8	11.8	11.8	11.7	11.7	11.7
Delay Adj:	1.00	1.00	1.00	1.00	1.00	1.00	1.00	1.00	1.00	1.00	1.00	1.00
AdjDel/Veh:	14.2	13.8	13.2	17.5	16.8	16.1	11.8	11.8	11.8	11.7	11.7	11.7
LOS by Move:	B	B	B	C	C	C	B	B	B	B	B	B
ApproachDel:		13.7			16.8			11.8			11.7	
Delay Adj:		1.00			1.00			1.00			1.00	
ApprAdjDel:		13.7			16.8			11.8			11.7	
LOS by Appr:		B			C			B			B	
AllWayAvgQ:	0.8	0.7	0.7	1.4	1.3	1.3	0.3	0.3	0.3	0.3	0.3	0.3

Note: Queue reported is the number of cars per lane.

Traffix 8.0.0715 (c) 2008 Dowling Assoc. Licensed to CRAIN & ASSOC., L.A.

Appendix B

Noise Measurement Data

Freq Weight : A
Time Weight : FAST
Level Range : 40-100
Max dB : 73.9 - 2009/04/27 11:12:08
Level Range : 40-100
SEL : 88.9
Leq : 59.4

No.s	Date Time	(dB)				
1	2009/04/27 11:02:11	53.0	53.1	53.5	53.8	53.7
6	2009/04/27 11:02:16	55.1	55.5	55.3	55.1	65.3
11	2009/04/27 11:02:21	59.4	59.8	60.5	62.4	61.5
16	2009/04/27 11:02:26	59.1	57.9	56.7	57.8	54.6
21	2009/04/27 11:02:31	55.0	55.0	54.9	55.7	55.9
26	2009/04/27 11:02:36	55.1	56.8	56.8	59.9	66.3
31	2009/04/27 11:02:41	65.1	59.3	59.8	60.1	60.6
36	2009/04/27 11:02:46	61.1	61.4	62.6	66.7	62.2
41	2009/04/27 11:02:51	59.6	58.7	60.8	59.7	59.4
46	2009/04/27 11:02:56	60.7	59.1	60.0	59.7	58.7
51	2009/04/27 11:03:01	58.3	60.1	63.4	70.0	63.1
56	2009/04/27 11:03:06	58.1	55.4	55.2	55.3	56.7
61	2009/04/27 11:03:11	57.0	57.3	58.1	60.1	61.8
66	2009/04/27 11:03:16	60.8	61.5	59.6	58.8	58.1
71	2009/04/27 11:03:21	57.5	57.9	59.1	58.7	59.1
76	2009/04/27 11:03:26	60.3	60.4	61.2	62.9	62.1
81	2009/04/27 11:03:31	60.8	60.4	59.1	58.3	60.4
86	2009/04/27 11:03:36	59.8	59.3	58.3	58.2	59.0
91	2009/04/27 11:03:41	59.6	61.5	58.8	57.5	55.7
96	2009/04/27 11:03:46	55.6	58.5	58.9	60.7	61.1
101	2009/04/27 11:03:51	61.0	61.1	61.0	61.2	60.8
106	2009/04/27 11:03:56	59.0	57.9	57.9	57.5	59.1
111	2009/04/27 11:04:01	57.4	57.8	57.9	59.0	60.9
116	2009/04/27 11:04:06	58.3	58.4	58.4	60.5	58.4
121	2009/04/27 11:04:11	57.9	60.3	58.6	60.5	63.1
126	2009/04/27 11:04:16	61.7	57.8	61.3	59.7	63.1
131	2009/04/27 11:04:21	63.2	62.6	64.2	62.0	59.1
136	2009/04/27 11:04:26	58.6	59.2	58.4	59.3	59.3
141	2009/04/27 11:04:31	58.8	57.4	56.7	57.6	60.0
146	2009/04/27 11:04:36	60.6	62.7	64.5	59.1	60.3
151	2009/04/27 11:04:41	58.5	61.0	61.0	59.9	58.3
156	2009/04/27 11:04:46	64.1	59.6	63.9	63.6	59.4
161	2009/04/27 11:04:51	61.0	60.7	61.8	60.0	57.4
166	2009/04/27 11:04:56	56.7	56.7	56.3	57.3	57.7
171	2009/04/27 11:05:01	58.4	59.8	61.1	64.6	60.7
176	2009/04/27 11:05:06	61.4	60.7	57.5	58.9	58.5
181	2009/04/27 11:05:11	57.8	56.3	55.2	58.0	58.3
186	2009/04/27 11:05:16	55.7	56.9	58.6	61.3	60.8
191	2009/04/27 11:05:21	62.5	61.4	62.7	61.7	60.8
196	2009/04/27 11:05:26	60.0	58.2	56.5	58.5	60.7
201	2009/04/27 11:05:31	64.0	63.5	58.0	58.1	57.4
206	2009/04/27 11:05:36	57.9	56.8	57.2	56.6	58.3
211	2009/04/27 11:05:41	58.1	57.1	56.8	56.6	56.8
216	2009/04/27 11:05:46	58.3	59.0	58.2	54.8	53.8
221	2009/04/27 11:05:51	54.9	55.3	57.2	57.3	60.9
226	2009/04/27 11:05:56	64.2	62.0	62.3	62.8	58.6
231	2009/04/27 11:06:01	57.0	55.3	56.6	56.9	55.9
236	2009/04/27 11:06:06	56.1	55.3	55.3	56.4	60.3
241	2009/04/27 11:06:11	62.1	65.0	67.1	66.0	60.0
246	2009/04/27 11:06:16	58.7	57.5	56.8	57.1	56.6
251	2009/04/27 11:06:21	56.3	56.1	56.8	54.4	55.8
256	2009/04/27 11:06:26	58.1	58.5	57.9	58.0	57.2
261	2009/04/27 11:06:31	57.1	57.8	57.9	57.7	56.5
266	2009/04/27 11:06:36	56.7	57.3	57.3	58.1	59.2
271	2009/04/27 11:06:41	59.3	59.1	58.0	60.9	57.4
276	2009/04/27 11:06:46	57.7	58.1	57.1	58.2	57.3
281	2009/04/27 11:06:51	57.7	56.8	57.2	59.3	59.9
286	2009/04/27 11:06:56	63.3	57.4	59.4	60.6	58.2
291	2009/04/27 11:07:01	57.3	57.0	58.0	58.7	57.6
296	2009/04/27 11:07:06	55.6	56.6	56.8	57.8	58.3
301	2009/04/27 11:07:11	61.0	60.5	64.1	64.0	61.6
306	2009/04/27 11:07:16	58.5	57.1	57.1	57.6	57.3
311	2009/04/27 11:07:21	61.6	57.3	55.1	55.0	54.3
316	2009/04/27 11:07:26	55.7	56.2	56.4	56.2	58.5
321	2009/04/27 11:07:31	62.0	59.7	58.1	56.4	55.5
326	2009/04/27 11:07:36	56.8	59.6	62.6	60.3	59.9
331	2009/04/27 11:07:41	59.7	58.7	58.7	58.3	59.6
336	2009/04/27 11:07:46	58.4	59.8	57.2	57.2	55.1
341	2009/04/27 11:07:51	55.0	63.2	55.9	55.9	55.7
346	2009/04/27 11:07:56	55.7	56.0	55.8	57.5	59.7
351	2009/04/27 11:08:01	59.3	61.0	61.3	64.4	63.0
356	2009/04/27 11:08:06	62.5	59.8	59.1	60.5	58.5
361	2009/04/27 11:08:11	58.2	57.5	60.3	57.1	57.1
366	2009/04/27 11:08:16	57.0	58.3	58.6	58.9	59.2
371	2009/04/27 11:08:21	58.9	58.0	58.5	59.7	57.9
376	2009/04/27 11:08:26	59.0	59.1	62.0	61.1	62.1
381	2009/04/27 11:08:31	66.2	64.5	60.5	61.1	60.7
386	2009/04/27 11:08:36	60.2	58.7	58.8	58.3	58.1
391	2009/04/27 11:08:41	57.2	60.8	57.2	57.6	58.2
396	2009/04/27 11:08:46	58.8	59.0	57.4	57.5	56.8
401	2009/04/27 11:08:51	56.7	57.2	57.4	57.2	55.8
406	2009/04/27 11:08:56	58.0	58.1	60.2	60.8	58.1
411	2009/04/27 11:09:01	57.1	57.4	57.8	59.6	62.2
416	2009/04/27 11:09:06	60.4	61.1	60.5	60.6	65.1

431	2009/04/27	11:09:21	61.7	63.9	61.4	61.2	59.3
436	2009/04/27	11:09:26	60.2	61.6	62.0	58.9	57.6
441	2009/04/27	11:09:31	58.0	57.6	57.3	56.2	57.6
446	2009/04/27	11:09:36	58.3	58.1	59.4	59.9	58.4
451	2009/04/27	11:09:41	56.8	56.6	54.9	54.2	54.9
456	2009/04/27	11:09:46	55.4	55.4	55.3	55.4	57.9
461	2009/04/27	11:09:51	57.5	58.9	58.0	59.9	57.2
466	2009/04/27	11:09:56	55.6	56.9	56.7	57.6	55.4
471	2009/04/27	11:10:01	61.3	61.9	65.5	61.4	58.5
476	2009/04/27	11:10:06	56.0	55.8	59.2	58.7	59.9
481	2009/04/27	11:10:11	61.0	58.3	61.5	61.0	59.8
486	2009/04/27	11:10:16	59.0	66.6	60.9	61.3	63.1
491	2009/04/27	11:10:21	63.3	63.9	67.3	66.6	64.7
496	2009/04/27	11:10:26	61.7	63.8	63.7	63.2	67.0
501	2009/04/27	11:10:31	62.3	62.4	62.0	61.3	61.6
506	2009/04/27	11:10:36	61.2	61.0	60.9	63.3	62.6
511	2009/04/27	11:10:41	60.5	61.7	62.1	59.5	60.0
516	2009/04/27	11:10:46	66.0	63.6	61.1	58.9	58.0
521	2009/04/27	11:10:51	57.5	57.9	58.4	60.2	57.4
526	2009/04/27	11:10:56	57.0	58.1	61.0	61.6	57.6
531	2009/04/27	11:11:01	56.7	56.9	58.1	62.5	64.0
536	2009/04/27	11:11:06	61.5	64.4	60.4	59.3	59.6
541	2009/04/27	11:11:11	60.6	63.5	61.7	60.1	59.8
546	2009/04/27	11:11:16	62.0	60.9	60.5	59.7	59.7
551	2009/04/27	11:11:21	58.4	58.0	58.9	58.2	59.4
556	2009/04/27	11:11:26	60.3	59.5	59.0	58.3	58.3
561	2009/04/27	11:11:31	59.9	59.7	59.3	58.8	57.4
566	2009/04/27	11:11:36	57.1	54.7	56.2	57.6	56.1
571	2009/04/27	11:11:41	57.2	56.9	57.9	56.4	56.7
576	2009/04/27	11:11:46	57.6	58.1	58.4	59.1	57.6
581	2009/04/27	11:11:51	59.6	61.7	62.5	63.0	64.9
586	2009/04/27	11:11:56	66.0	61.0	58.4	56.8	56.7
591	2009/04/27	11:12:01	55.9	56.0	61.8	59.6	64.6
596	2009/04/27	11:12:06	65.4	57.4	65.4	56.5	58.3
601	2009/04/27	11:12:11	58.1	56.2	60.3	57.7	56.7
606	2009/04/27	11:12:16	58.2	60.0	63.7	64.4	60.1
611	2009/04/27	11:12:21	58.3	57.7	59.2	59.3	58.4
616	2009/04/27	11:12:26	57.3	58.0	56.8	55.9	57.0
621	2009/04/27	11:12:31	60.0	58.3	59.2	57.3	57.1
626	2009/04/27	11:12:36	58.0	57.5	58.9	57.9	57.1
631	2009/04/27	11:12:41	56.4	56.1	57.8	59.2	58.7
636	2009/04/27	11:12:46	56.9	55.8	56.2	58.6	60.3
641	2009/04/27	11:12:51	57.5	59.1	60.8	61.3	60.5
646	2009/04/27	11:12:56	58.0	58.9	58.8	61.5	59.0
651	2009/04/27	11:13:01	57.0	55.8	56.3	58.1	61.4
656	2009/04/27	11:13:06	57.3	58.8	56.8	57.8	57.6
661	2009/04/27	11:13:11	57.6	57.4	55.8	56.6	58.0
666	2009/04/27	11:13:16	58.3	55.1	54.2	53.6	54.2
671	2009/04/27	11:13:21	53.1	54.1	57.7	60.3	60.8
676	2009/04/27	11:13:26	57.6	57.5	56.6	58.7	57.7
681	2009/04/27	11:13:31	57.1	55.7	55.0	55.8	58.0
686	2009/04/27	11:13:36	60.2	58.4	59.3	59.1	58.8
691	2009/04/27	11:13:41	56.6	55.7	56.2	55.0	54.0
696	2009/04/27	11:13:46	55.2	54.6	55.7	54.7	53.2
701	2009/04/27	11:13:51	54.3	53.4	54.5	56.5	61.3
706	2009/04/27	11:13:56	54.3	55.1	57.3	57.5	57.4
711	2009/04/27	11:14:01	53.7	53.5	53.4	53.6	54.6
716	2009/04/27	11:14:06	54.6	55.5	56.3	57.4	57.8
721	2009/04/27	11:14:11	58.8	58.0	55.7	57.2	55.8
726	2009/04/27	11:14:16	56.3	56.4	56.6	60.8	57.1
731	2009/04/27	11:14:21	57.6	56.4	55.2	54.6	57.3
736	2009/04/27	11:14:26	56.5	53.9	53.6	53.6	53.0
741	2009/04/27	11:14:31	54.7	53.8	53.9	55.3	54.4
746	2009/04/27	11:14:36	54.4	58.5	56.6	55.3	58.7
751	2009/04/27	11:14:41	56.4	56.9	54.4	55.0	54.0
756	2009/04/27	11:14:46	54.2	56.3	57.3	54.9	56.3
761	2009/04/27	11:14:51	56.8	56.1	55.3	53.8	53.1
766	2009/04/27	11:14:56	51.7	54.6	55.5	57.0	54.9
771	2009/04/27	11:15:01	55.1	55.7	55.3	55.5	56.9
776	2009/04/27	11:15:06	57.8	56.0	57.3	53.7	54.0
781	2009/04/27	11:15:11	56.2	57.4	55.6	56.1	54.2
786	2009/04/27	11:15:16	54.5	59.5	57.1	58.6	57.6
791	2009/04/27	11:15:21	58.3	58.1	57.6	55.9	55.9
796	2009/04/27	11:15:26	55.7	58.6	57.8	56.2	55.6
801	2009/04/27	11:15:31	57.5	59.0	61.3	58.0	54.7
806	2009/04/27	11:15:36	55.4	56.6	55.8	55.4	56.0
811	2009/04/27	11:15:41	54.4	54.6	55.2	55.5	55.1
816	2009/04/27	11:15:46	55.7	59.2	60.7	60.5	58.3
821	2009/04/27	11:15:51	55.7	55.6	54.1	54.7	53.8
826	2009/04/27	11:15:56	53.9	55.0	54.7	56.4	57.6
831	2009/04/27	11:16:01	60.3	59.2	59.1	58.8	58.8
836	2009/04/27	11:16:06	59.8	59.7	59.8	60.6	59.8
841	2009/04/27	11:16:11	57.7	57.3	56.8	56.8	55.2
846	2009/04/27	11:16:16	55.9	57.2	58.6	58.3	60.7
851	2009/04/27	11:16:21	59.5	59.4	61.4	55.3	53.5
856	2009/04/27	11:16:26	54.0	55.0	53.6	53.9	54.1
861	2009/04/27	11:16:31	54.8	53.7	53.0	53.9	54.6
866	2009/04/27	11:16:36	55.0	55.3	56.7	58.0	58.8
871	2009/04/27	11:16:41	59.5	55.9	54.2	53.6	52.9
876	2009/04/27	11:16:46	53.2	53.5	53.5	55.2	55.0
881	2009/04/27	11:16:51	55.0	55.8	56.5	58.9	59.9
886	2009/04/27	11:16:56	57.6	56.4	53.5	52.6	52.2
891	2009/04/27	11:17:01	51.5	52.1	52.4	51.8	52.2
896	2009/04/27	11:17:06	52.0	52.4	53.2	55.6	56.8

Freq Weight : A
Time Weight : FAST
Level Range : 40-100
Max dB : 74.1 - 2009/04/27 11:44:25
Level Range : 40-100
SEL : 92.0
Leq : 62.5

No.s	Date Time	(dB)				
1	2009/04/27 11:29:35	62.2	62.2	62.1	62.1	61.7
6	2009/04/27 11:29:40	61.7	62.2	61.3	61.9	61.9
11	2009/04/27 11:29:45	61.5	61.6	63.8	62.2	62.1
16	2009/04/27 11:29:50	61.2	61.5	61.9	61.6	62.0
21	2009/04/27 11:29:55	61.8	62.0	62.7	62.9	62.3
26	2009/04/27 11:30:00	63.1	63.6	65.1	66.3	65.3
31	2009/04/27 11:30:05	64.2	63.7	64.3	63.8	64.2
36	2009/04/27 11:30:10	62.5	62.5	62.5	63.4	62.2
41	2009/04/27 11:30:15	62.0	62.0	62.1	61.8	61.5
46	2009/04/27 11:30:20	61.3	61.8	62.1	60.9	61.5
51	2009/04/27 11:30:25	61.5	62.3	61.8	61.6	61.9
56	2009/04/27 11:30:30	62.0	61.6	61.4	61.6	61.7
61	2009/04/27 11:30:35	61.4	61.6	61.5	62.1	62.1
66	2009/04/27 11:30:40	61.9	61.7	62.2	61.9	61.8
71	2009/04/27 11:30:45	61.7	61.8	61.6	61.8	61.7
76	2009/04/27 11:30:50	62.0	61.9	62.3	61.9	62.3
81	2009/04/27 11:30:55	61.9	62.2	61.7	62.0	61.8
86	2009/04/27 11:31:00	62.1	62.0	61.7	61.9	62.3
91	2009/04/27 11:31:05	62.2	61.5	61.6	62.0	61.8
96	2009/04/27 11:31:10	62.2	61.8	61.8	62.5	62.7
101	2009/04/27 11:31:15	62.4	62.0	62.4	62.1	62.3
106	2009/04/27 11:31:20	62.4	64.1	62.3	62.0	62.6
111	2009/04/27 11:31:25	62.2	62.1	61.8	62.2	62.3
116	2009/04/27 11:31:30	62.1	62.3	62.2	62.3	62.6
121	2009/04/27 11:31:35	62.5	62.6	62.2	62.8	64.1
126	2009/04/27 11:31:40	63.9	64.0	63.7	63.2	62.1
131	2009/04/27 11:31:45	62.2	62.2	62.0	62.5	62.0
136	2009/04/27 11:31:50	62.3	62.4	62.6	62.2	62.1
141	2009/04/27 11:31:55	62.2	62.0	62.7	61.8	61.8
146	2009/04/27 11:32:00	62.2	62.1	62.1	62.2	62.1
151	2009/04/27 11:32:05	61.9	63.2	62.3	62.5	62.0
156	2009/04/27 11:32:10	62.1	62.6	62.4	62.1	61.7
161	2009/04/27 11:32:15	62.1	62.5	62.7	62.6	63.3
166	2009/04/27 11:32:20	63.0	63.2	63.0	62.3	62.4
171	2009/04/27 11:32:25	61.8	62.2	62.1	62.0	61.8
176	2009/04/27 11:32:30	62.2	62.3	62.2	61.9	62.4
181	2009/04/27 11:32:35	63.0	62.1	61.9	62.1	61.7
186	2009/04/27 11:32:40	61.7	61.7	61.9	62.1	61.9
191	2009/04/27 11:32:45	61.8	61.8	61.9	62.1	62.0
196	2009/04/27 11:32:50	61.8	62.0	62.1	61.8	61.8
201	2009/04/27 11:32:55	61.5	62.1	62.2	62.4	61.8
206	2009/04/27 11:33:00	62.0	61.8	61.9	61.7	62.3
211	2009/04/27 11:33:05	62.1	61.5	62.1	61.4	61.6
216	2009/04/27 11:33:10	61.7	62.5	62.0	63.0	62.5
221	2009/04/27 11:33:15	62.5	62.9	62.1	62.5	62.1
226	2009/04/27 11:33:20	62.5	62.3	62.9	62.2	62.5
231	2009/04/27 11:33:25	62.1	62.5	62.1	62.2	62.0
236	2009/04/27 11:33:30	61.9	62.1	62.3	62.4	62.8
241	2009/04/27 11:33:35	62.3	61.8	62.4	62.3	62.3
246	2009/04/27 11:33:40	61.9	62.3	61.9	62.5	61.8
251	2009/04/27 11:33:45	61.8	62.0	62.1	61.7	62.2
256	2009/04/27 11:33:50	62.7	62.8	62.9	62.8	62.3
261	2009/04/27 11:33:55	61.7	62.0	61.7	62.0	62.0
266	2009/04/27 11:34:00	61.7	62.0	61.8	62.2	61.8
271	2009/04/27 11:34:05	62.1	62.5	61.8	62.4	62.4
276	2009/04/27 11:34:10	61.9	62.0	62.1	62.6	62.5
281	2009/04/27 11:34:15	63.5	62.3	62.6	62.7	61.8
286	2009/04/27 11:34:20	62.1	61.5	62.8	61.7	61.7
291	2009/04/27 11:34:25	62.1	62.1	61.8	61.9	61.9
296	2009/04/27 11:34:30	62.9	62.1	61.8	62.2	62.1
301	2009/04/27 11:34:35	62.7	62.4	62.0	62.3	62.4
306	2009/04/27 11:34:40	62.6	61.7	62.4	61.9	62.4
311	2009/04/27 11:34:45	61.6	61.9	61.8	61.8	61.5
316	2009/04/27 11:34:50	61.6	62.1	61.5	62.0	61.9
321	2009/04/27 11:34:55	61.9	62.5	61.9	62.1	61.9
326	2009/04/27 11:35:00	62.5	61.9	62.3	61.9	62.4
331	2009/04/27 11:35:05	62.7	62.3	62.8	63.7	62.8
336	2009/04/27 11:35:10	62.8	62.7	61.9	62.3	62.3
341	2009/04/27 11:35:15	61.6	62.1	62.3	62.7	62.8
346	2009/04/27 11:35:20	62.1	61.9	62.1	62.5	62.3
351	2009/04/27 11:35:25	62.1	62.5	62.1	62.4	62.0
356	2009/04/27 11:35:30	61.8	62.4	62.2	62.0	62.1
361	2009/04/27 11:35:35	62.1	62.6	62.6	62.6	62.1
366	2009/04/27 11:35:40	62.3	62.0	62.5	62.1	61.9
371	2009/04/27 11:35:45	61.7	62.1	61.8	62.3	61.8
376	2009/04/27 11:35:50	62.2	61.6	62.0	61.4	62.0
381	2009/04/27 11:35:55	61.7	62.0	61.9	61.9	61.8
386	2009/04/27 11:36:00	62.4	62.3	62.3	62.0	62.1
391	2009/04/27 11:36:05	62.6	62.6	62.5	62.4	63.0
396	2009/04/27 11:36:10	63.0	63.5	62.0	62.5	62.3
401	2009/04/27 11:36:15	61.9	62.2	61.9	62.6	62.0
406	2009/04/27 11:36:20	62.3	61.4	62.2	62.1	61.9
411	2009/04/27 11:36:25	61.5	61.3	62.0	62.0	61.7
416	2009/04/27 11:36:30	62.0	63.2	62.1	62.4	61.9

431	2009/04/27	11:36:45	62.1	61.7	62.5	62.0	62.4
436	2009/04/27	11:36:50	61.9	61.8	62.5	62.2	62.1
441	2009/04/27	11:36:55	62.7	62.2	62.0	62.4	62.8
446	2009/04/27	11:37:00	62.0	61.8	62.0	62.7	62.5
451	2009/04/27	11:37:05	62.1	63.6	62.0	61.8	62.8
456	2009/04/27	11:37:10	62.5	62.1	62.1	62.3	62.4
461	2009/04/27	11:37:15	62.6	62.6	62.1	62.6	62.6
466	2009/04/27	11:37:20	62.6	63.1	62.1	62.6	62.4
471	2009/04/27	11:37:25	61.8	62.4	61.9	62.3	62.9
476	2009/04/27	11:37:30	62.4	62.5	62.6	62.6	62.5
481	2009/04/27	11:37:35	62.7	62.7	62.5	62.3	62.8
486	2009/04/27	11:37:40	62.2	62.3	62.1	63.0	62.5
491	2009/04/27	11:37:45	62.3	62.6	61.9	62.6	62.6
496	2009/04/27	11:37:50	62.0	62.8	63.8	62.8	62.4
501	2009/04/27	11:37:55	62.7	62.2	63.1	62.5	62.4
506	2009/04/27	11:38:00	62.0	62.2	62.7	62.1	62.5
511	2009/04/27	11:38:05	61.8	62.3	62.6	62.4	62.7
516	2009/04/27	11:38:10	63.0	63.1	63.3	62.7	62.3
521	2009/04/27	11:38:15	62.5	62.1	62.7	62.4	62.9
526	2009/04/27	11:38:20	63.0	62.7	62.4	62.7	63.0
531	2009/04/27	11:38:25	62.7	63.0	62.3	63.0	62.9
536	2009/04/27	11:38:30	62.9	62.9	63.0	63.4	63.5
541	2009/04/27	11:38:35	63.0	66.2	62.9	63.5	63.4
546	2009/04/27	11:38:40	63.1	63.0	62.2	62.5	62.4
551	2009/04/27	11:38:45	62.4	62.7	62.3	64.6	62.4
556	2009/04/27	11:38:50	62.0	62.7	62.6	62.0	61.8
561	2009/04/27	11:38:55	62.2	62.3	62.5	62.5	62.1
566	2009/04/27	11:39:00	62.3	62.7	62.7	62.7	62.2
571	2009/04/27	11:39:05	62.3	62.8	62.5	62.6	62.4
576	2009/04/27	11:39:10	62.6	62.0	63.3	62.9	62.6
581	2009/04/27	11:39:15	62.6	62.7	62.8	62.3	62.2
586	2009/04/27	11:39:20	62.0	61.9	63.0	62.6	62.3
591	2009/04/27	11:39:25	62.5	62.8	62.7	62.6	62.1
596	2009/04/27	11:39:30	62.6	62.7	63.4	63.2	63.2
601	2009/04/27	11:39:35	62.7	63.1	62.8	62.6	62.8
606	2009/04/27	11:39:40	62.7	62.5	62.4	62.3	62.2
611	2009/04/27	11:39:45	62.7	63.1	62.6	63.5	64.6
616	2009/04/27	11:39:50	63.0	63.6	63.7	63.7	64.8
621	2009/04/27	11:39:55	64.6	63.3	62.9	62.8	63.4
626	2009/04/27	11:40:00	62.8	62.2	62.5	62.8	62.5
631	2009/04/27	11:40:05	61.8	62.5	62.8	62.0	62.6
636	2009/04/27	11:40:10	63.0	62.9	62.4	62.5	62.7
641	2009/04/27	11:40:15	62.1	62.4	62.7	62.4	62.5
646	2009/04/27	11:40:20	62.1	62.4	62.5	62.0	62.3
651	2009/04/27	11:40:25	62.1	62.5	62.1	62.4	62.6
656	2009/04/27	11:40:30	62.5	63.1	62.2	62.8	62.5
661	2009/04/27	11:40:35	62.4	63.2	63.1	62.9	62.6
666	2009/04/27	11:40:40	62.1	62.7	62.8	62.6	62.8
671	2009/04/27	11:40:45	62.4	62.1	62.5	62.7	62.4
676	2009/04/27	11:40:50	62.5	62.1	62.2	62.4	62.1
681	2009/04/27	11:40:55	62.4	63.2	62.9	62.8	62.8
686	2009/04/27	11:41:00	62.0	62.1	62.0	61.7	62.7
691	2009/04/27	11:41:05	62.7	62.6	63.6	62.4	62.4
696	2009/04/27	11:41:10	62.0	61.9	61.8	62.0	62.0
701	2009/04/27	11:41:15	62.5	62.3	62.3	62.1	62.2
706	2009/04/27	11:41:20	62.7	62.6	62.5	62.3	62.9
711	2009/04/27	11:41:25	62.9	63.9	62.3	63.3	64.9
716	2009/04/27	11:41:30	66.7	72.9	70.1	66.5	63.5
721	2009/04/27	11:41:35	62.9	62.8	62.6	63.9	62.6
726	2009/04/27	11:41:40	62.3	62.6	62.4	62.6	62.2
731	2009/04/27	11:41:45	62.3	62.4	62.4	62.0	62.3
736	2009/04/27	11:41:50	62.3	62.3	61.7	62.7	62.2
741	2009/04/27	11:41:55	62.2	62.4	62.6	62.2	62.6
746	2009/04/27	11:42:00	62.7	62.2	62.8	62.6	62.9
751	2009/04/27	11:42:05	62.3	62.5	62.4	63.0	62.7
756	2009/04/27	11:42:10	62.2	62.2	62.8	63.2	62.3
761	2009/04/27	11:42:15	62.5	62.3	62.8	62.9	62.7
766	2009/04/27	11:42:20	63.0	62.6	63.0	62.6	62.6
771	2009/04/27	11:42:25	62.3	62.8	62.8	62.7	62.3
776	2009/04/27	11:42:30	62.5	62.7	62.5	62.7	62.6
781	2009/04/27	11:42:35	62.6	62.1	62.7	62.2	62.9
786	2009/04/27	11:42:40	62.6	62.4	62.9	62.9	62.7
791	2009/04/27	11:42:45	62.5	62.9	61.7	62.3	62.8
796	2009/04/27	11:42:50	61.8	62.0	62.1	62.9	62.3
801	2009/04/27	11:42:55	61.9	62.2	62.4	62.2	62.4
806	2009/04/27	11:43:00	62.3	61.9	62.4	62.7	62.2
811	2009/04/27	11:43:05	62.2	62.7	62.5	62.5	62.4
816	2009/04/27	11:43:10	62.7	62.6	63.1	63.4	62.9
821	2009/04/27	11:43:15	62.9	62.7	63.4	63.4	63.0
826	2009/04/27	11:43:20	63.9	62.6	62.8	62.4	62.9
831	2009/04/27	11:43:25	62.7	62.7	62.8	62.3	62.9
836	2009/04/27	11:43:30	62.6	62.8	62.6	62.5	62.7
841	2009/04/27	11:43:35	63.3	62.5	62.5	62.7	62.7
846	2009/04/27	11:43:40	62.4	62.5	61.9	62.5	62.6
851	2009/04/27	11:43:45	62.0	62.2	62.4	62.4	62.4
856	2009/04/27	11:43:50	62.2	62.4	62.6	62.3	61.9
861	2009/04/27	11:43:55	62.1	62.5	62.3	62.4	62.6
866	2009/04/27	11:44:00	63.0	62.4	62.3	63.6	62.5
871	2009/04/27	11:44:05	62.8	62.9	62.3	63.1	62.9
876	2009/04/27	11:44:10	63.4	63.6	64.8	65.3	63.4
881	2009/04/27	11:44:15	63.7	63.5	62.6	62.7	62.5
886	2009/04/27	11:44:20	62.7	62.0	62.6	62.6	62.7
891	2009/04/27	11:44:25	69.5	62.8	62.6	62.6	62.4
896	2009/04/27	11:44:30	63.3	62.8	62.6	62.3	63.0

Freq Weight : A
Time Weight : FAST
Level Range : 40-100
Max dB : 80.5 - 2009/04/27 11:50:33
Level Range : 40-100
SEL : 92.4
Leq : 62.9

No.s	Date Time	(dB)				
1	2009/04/27 11:48:07	67.2	66.0	64.2	62.8	61.2
6	2009/04/27 11:48:12	59.9	60.3	60.5	62.5	62.5
11	2009/04/27 11:48:17	60.2	59.1	58.5	60.0	61.2
16	2009/04/27 11:48:22	62.3	63.0	62.6	62.0	63.1
21	2009/04/27 11:48:27	64.0	66.9	64.8	66.7	69.0
26	2009/04/27 11:48:32	71.3	75.3	75.8	72.4	69.5
31	2009/04/27 11:48:37	66.4	65.3	64.3	63.6	61.6
36	2009/04/27 11:48:42	60.4	59.4	59.5	58.4	58.3
41	2009/04/27 11:48:47	57.5	57.4	56.8	56.1	55.7
46	2009/04/27 11:48:52	56.4	56.4	56.5	57.6	56.7
51	2009/04/27 11:48:57	57.1	57.0	58.2	58.7	59.4
56	2009/04/27 11:49:02	61.5	64.3	66.0	67.9	63.4
61	2009/04/27 11:49:07	62.0	61.9	62.5	62.8	62.2
66	2009/04/27 11:49:12	62.5	62.6	61.4	63.7	64.7
71	2009/04/27 11:49:17	61.3	60.9	61.5	64.0	63.6
76	2009/04/27 11:49:22	64.2	67.7	65.8	61.2	59.9
81	2009/04/27 11:49:27	60.2	61.4	63.9	65.1	66.3
86	2009/04/27 11:49:32	65.1	63.6	65.5	66.6	62.3
91	2009/04/27 11:49:37	61.0	61.8	64.1	63.9	67.3
96	2009/04/27 11:49:42	70.2	63.2	65.3	66.9	61.4
101	2009/04/27 11:49:47	62.2	57.5	58.1	56.3	55.9
106	2009/04/27 11:49:52	56.6	56.8	58.4	59.0	59.9
111	2009/04/27 11:49:57	59.0	59.9	59.7	65.6	70.9
116	2009/04/27 11:50:02	65.2	73.1	70.1	64.6	63.4
121	2009/04/27 11:50:07	62.9	62.7	63.6	60.5	61.3
126	2009/04/27 11:50:12	62.1	64.8	63.2	63.5	62.2
131	2009/04/27 11:50:17	60.7	61.7	61.5	63.7	64.2
136	2009/04/27 11:50:22	63.8	63.4	63.2	61.6	61.9
141	2009/04/27 11:50:27	67.5	65.4	65.3	66.7	77.9
146	2009/04/27 11:50:32	67.9	76.8	64.3	65.6	63.4
151	2009/04/27 11:50:37	63.7	61.0	60.7	61.4	63.2
156	2009/04/27 11:50:42	62.6	60.9	59.3	58.8	59.2
161	2009/04/27 11:50:47	59.0	58.5	57.2	57.6	58.8
166	2009/04/27 11:50:52	61.5	58.3	59.0	58.3	56.8
171	2009/04/27 11:50:57	56.4	56.1	55.7	57.2	57.4
176	2009/04/27 11:51:02	56.6	58.0	56.5	57.0	57.2
181	2009/04/27 11:51:07	57.9	58.6	60.3	60.7	61.6
186	2009/04/27 11:51:12	61.4	61.5	60.4	60.3	59.1
191	2009/04/27 11:51:17	60.0	60.1	59.2	62.2	64.0
196	2009/04/27 11:51:22	62.2	59.6	60.4	61.1	64.7
201	2009/04/27 11:51:27	66.6	67.0	66.3	66.1	66.1
206	2009/04/27 11:51:32	68.2	65.3	64.5	62.7	63.1
211	2009/04/27 11:51:37	62.4	60.7	60.4	59.4	58.9
216	2009/04/27 11:51:42	58.3	57.4	56.3	61.4	58.3
221	2009/04/27 11:51:47	56.3	56.0	56.6	63.4	56.7
226	2009/04/27 11:51:52	57.0	59.1	56.4	58.6	56.3
231	2009/04/27 11:51:57	57.0	57.4	57.7	61.0	57.9
236	2009/04/27 11:52:02	60.6	59.7	59.2	59.9	58.7
241	2009/04/27 11:52:07	61.4	59.5	60.7	59.1	57.6
246	2009/04/27 11:52:12	58.5	56.9	57.6	57.6	59.6
251	2009/04/27 11:52:17	58.8	59.9	59.7	61.7	63.8
256	2009/04/27 11:52:22	62.0	58.3	58.1	58.8	59.1
261	2009/04/27 11:52:27	58.3	58.1	59.5	60.5	63.2
266	2009/04/27 11:52:32	65.8	66.4	63.5	62.8	63.1
271	2009/04/27 11:52:37	65.2	65.5	64.8	66.3	64.7
276	2009/04/27 11:52:42	59.5	57.9	56.8	57.2	56.0
281	2009/04/27 11:52:47	56.4	57.4	58.7	57.4	57.1
286	2009/04/27 11:52:52	61.0	61.3	61.6	59.0	57.9
291	2009/04/27 11:52:57	59.6	60.6	60.4	59.9	59.9
296	2009/04/27 11:53:02	58.4	58.6	59.3	60.2	60.1
301	2009/04/27 11:53:07	58.9	58.4	57.4	59.6	60.9
306	2009/04/27 11:53:12	58.4	65.1	63.5	61.8	59.8
311	2009/04/27 11:53:17	59.8	61.4	62.2	61.8	60.3
316	2009/04/27 11:53:22	60.6	60.4	62.8	61.6	60.2
321	2009/04/27 11:53:27	57.5	58.1	57.8	58.0	57.7
326	2009/04/27 11:53:32	59.1	60.5	61.5	65.0	65.3
331	2009/04/27 11:53:37	64.2	62.3	61.5	60.4	60.3
336	2009/04/27 11:53:42	60.0	58.6	58.9	58.0	58.2
341	2009/04/27 11:53:47	57.3	57.4	57.8	57.5	59.5
346	2009/04/27 11:53:52	61.3	63.9	63.8	59.0	56.4
351	2009/04/27 11:53:57	56.2	56.2	56.3	56.1	56.0
356	2009/04/27 11:54:02	56.2	57.1	57.8	59.7	63.1
361	2009/04/27 11:54:07	63.8	60.4	59.4	58.6	58.8
366	2009/04/27 11:54:12	57.6	57.4	58.6	59.5	59.1
371	2009/04/27 11:54:17	60.1	59.3	57.5	57.9	57.2
376	2009/04/27 11:54:22	65.9	62.8	60.1	59.2	59.2
381	2009/04/27 11:54:27	59.6	60.7	63.2	66.2	67.2
386	2009/04/27 11:54:32	69.2	67.0	64.3	62.0	61.6
391	2009/04/27 11:54:37	63.2	62.1	66.0	65.1	64.9
396	2009/04/27 11:54:42	62.6	58.7	58.6	59.2	65.2
401	2009/04/27 11:54:47	66.8	60.4	65.1	69.0	61.9
406	2009/04/27 11:54:52	67.7	60.3	65.2	55.3	70.4
411	2009/04/27 11:54:57	70.3	63.4	58.3	61.7	59.7
416	2009/04/27 11:55:02	66.9	64.2	62.9	62.8	59.2

431	2009/04/27	11:55:17	59.2	59.4	60.5	60.5	60.1
436	2009/04/27	11:55:22	58.7	58.5	59.4	61.6	62.7
441	2009/04/27	11:55:27	64.6	68.3	68.5	67.7	64.8
446	2009/04/27	11:55:32	62.2	60.8	60.4	61.5	61.3
451	2009/04/27	11:55:37	64.3	62.1	60.4	58.0	56.4
456	2009/04/27	11:55:42	56.1	56.7	56.7	55.8	55.9
461	2009/04/27	11:55:47	55.4	55.4	56.9	55.8	55.8
466	2009/04/27	11:55:52	56.0	57.0	56.4	56.7	56.1
471	2009/04/27	11:55:57	56.9	57.2	57.8	56.9	57.2
476	2009/04/27	11:56:02	56.5	58.4	57.3	57.6	58.0
481	2009/04/27	11:56:07	59.4	60.9	61.5	61.4	61.3
486	2009/04/27	11:56:12	61.7	61.7	61.9	61.2	61.5
491	2009/04/27	11:56:17	59.4	59.1	59.0	59.6	60.0
496	2009/04/27	11:56:22	59.7	59.2	58.8	59.7	61.5
501	2009/04/27	11:56:27	62.0	63.1	64.2	64.5	65.0
506	2009/04/27	11:56:32	65.9	67.1	66.6	64.2	60.3
511	2009/04/27	11:56:37	58.0	59.6	59.0	56.6	56.1
516	2009/04/27	11:56:42	55.6	55.8	55.4	55.4	55.2
521	2009/04/27	11:56:47	55.2	56.4	55.2	55.4	54.9
526	2009/04/27	11:56:52	54.9	55.3	56.2	57.0	57.1
531	2009/04/27	11:56:57	55.7	57.1	58.5	57.7	60.8
536	2009/04/27	11:57:02	63.7	60.0	62.7	58.1	58.9
541	2009/04/27	11:57:07	60.5	63.6	63.4	61.7	62.4
546	2009/04/27	11:57:12	62.8	67.1	66.1	64.8	66.3
551	2009/04/27	11:57:17	62.6	62.1	62.7	63.8	64.9
556	2009/04/27	11:57:22	64.8	65.0	62.9	64.1	64.5
561	2009/04/27	11:57:27	64.9	65.0	65.5	64.7	62.3
566	2009/04/27	11:57:32	61.8	62.2	60.4	59.1	59.5
571	2009/04/27	11:57:37	58.8	59.5	61.0	59.0	59.7
576	2009/04/27	11:57:42	58.1	56.9	57.4	57.3	57.2
581	2009/04/27	11:57:47	57.6	57.5	60.3	61.0	60.3
586	2009/04/27	11:57:52	59.0	56.9	56.1	56.9	55.2
591	2009/04/27	11:57:57	54.8	58.0	56.2	55.6	56.3
596	2009/04/27	11:58:02	58.3	57.8	58.1	57.4	57.4
601	2009/04/27	11:58:07	60.7	58.3	56.4	56.5	55.9
606	2009/04/27	11:58:12	56.1	56.6	56.5	56.4	58.4
611	2009/04/27	11:58:17	57.8	57.1	58.6	56.2	56.2
616	2009/04/27	11:58:22	55.9	57.4	58.3	59.2	60.9
621	2009/04/27	11:58:27	59.9	62.5	62.1	65.0	64.3
626	2009/04/27	11:58:32	64.8	64.2	62.9	61.6	61.4
631	2009/04/27	11:58:37	60.8	59.3	60.9	61.8	62.0
636	2009/04/27	11:58:42	62.3	61.7	61.0	59.6	58.4
641	2009/04/27	11:58:47	61.3	59.5	61.2	58.0	58.9
646	2009/04/27	11:58:52	59.3	61.7	63.1	64.6	68.5
651	2009/04/27	11:58:57	69.9	67.5	63.6	58.9	57.8
656	2009/04/27	11:59:02	56.4	58.9	57.9	57.5	58.7
661	2009/04/27	11:59:07	62.1	63.4	61.4	61.5	63.4
666	2009/04/27	11:59:12	67.6	65.5	62.9	62.6	64.3
671	2009/04/27	11:59:17	69.6	63.9	63.4	62.3	63.3
676	2009/04/27	11:59:22	64.5	65.7	62.9	65.0	63.9
681	2009/04/27	11:59:27	60.2	60.7	66.2	67.8	67.4
686	2009/04/27	11:59:32	67.1	68.3	66.3	62.7	62.3
691	2009/04/27	11:59:37	65.9	63.5	63.3	64.0	61.8
696	2009/04/27	11:59:42	58.9	61.0	57.8	56.6	61.0
701	2009/04/27	11:59:47	60.9	60.3	62.1	61.4	62.7
706	2009/04/27	11:59:52	63.3	62.0	60.3	57.4	57.4
711	2009/04/27	11:59:57	58.8	57.9	56.5	57.8	57.1
716	2009/04/27	12:00:02	58.5	58.3	58.5	62.9	63.8
721	2009/04/27	12:00:07	62.4	62.0	60.7	56.4	57.9
726	2009/04/27	12:00:12	60.2	59.5	62.3	63.3	62.6
731	2009/04/27	12:00:17	61.1	60.2	58.4	58.4	59.3
736	2009/04/27	12:00:22	62.0	61.9	62.0	58.7	59.1
741	2009/04/27	12:00:27	59.6	60.8	62.7	63.6	64.0
746	2009/04/27	12:00:32	64.8	69.1	68.0	66.4	65.8
751	2009/04/27	12:00:37	64.2	66.7	66.0	62.9	59.2
756	2009/04/27	12:00:42	59.8	57.4	57.9	57.2	58.3
761	2009/04/27	12:00:47	56.8	57.2	57.3	56.2	56.4
766	2009/04/27	12:00:52	61.1	56.9	57.6	56.4	58.5
771	2009/04/27	12:00:57	58.4	60.5	58.6	59.3	58.8
776	2009/04/27	12:01:02	63.9	56.7	59.6	59.6	60.1
781	2009/04/27	12:01:07	59.9	63.0	65.2	66.3	61.9
786	2009/04/27	12:01:12	63.2	64.6	62.3	63.8	70.2
791	2009/04/27	12:01:17	68.9	75.9	64.6	64.0	64.1
796	2009/04/27	12:01:22	62.1	60.8	62.5	63.3	63.8
801	2009/04/27	12:01:27	63.1	62.6	61.9	61.9	62.9
806	2009/04/27	12:01:32	66.0	66.9	67.7	67.0	63.9
811	2009/04/27	12:01:37	61.6	61.7	66.5	68.7	64.3
816	2009/04/27	12:01:42	58.5	58.8	57.0	57.4	56.5
821	2009/04/27	12:01:47	57.5	58.2	60.2	64.1	62.9
826	2009/04/27	12:01:52	59.7	56.4	65.9	55.2	56.7
831	2009/04/27	12:01:57	59.2	57.6	58.0	56.6	59.4
836	2009/04/27	12:02:02	57.3	58.3	58.2	57.7	58.6
841	2009/04/27	12:02:07	57.2	60.4	56.6	57.7	57.6
846	2009/04/27	12:02:12	60.4	57.7	57.6	58.8	61.9
851	2009/04/27	12:02:17	63.0	63.9	62.6	61.5	62.6
856	2009/04/27	12:02:22	59.2	58.5	61.9	59.0	62.4
861	2009/04/27	12:02:27	62.4	61.6	64.0	64.3	66.8
866	2009/04/27	12:02:32	64.9	62.1	63.1	62.1	62.4
871	2009/04/27	12:02:37	62.2	62.2	66.8	65.9	64.7
876	2009/04/27	12:02:42	59.4	65.5	59.0	58.2	57.4
881	2009/04/27	12:02:47	59.1	61.7	63.2	62.6	66.7
886	2009/04/27	12:02:52	60.5	57.0	69.7	67.6	66.6
891	2009/04/27	12:02:57	63.2	64.4	59.3	57.8	60.4
896	2009/04/27	12:03:02	56.8	63.6	69.0	61.4	63.3

https://www.hudexchange.info/environmental-review/dnl-calculator/

Apps | www.fta.dot.gov/doc | DNL Calculator - HUD | Sea Level Rise Policy | No Effect Determinat | Climate Change | 1 Introduction | Sea-L | Sea Level Rise Viewe | Sea Level Rise and Ce

button(s) below

- All Road and Rail input values must be positive non-decimal numbers
- All Road and/or Rail DNL value(s) must be calculated separately before calculating the Site DNL
- All checkboxes that apply must be checked for vehicles and trains in the tables' headers
- **Note #1:** Tooltips, containing field specific information, have been added in this tool and may be accessed by hovering over all the respective data fields (site identification, roadway and railway assessment, DNL calculation results, roadway and railway input variables) with the mouse
- **Note #2:** DNL Calculator assumes roadway data is always entered

DNL Calculator

Site ID	250-260 N. Canon
Record Date	09/07/2016
User's Name	Sarah Sorensen

Road #1 Name:	**Alley**

Road #1

Vehicle Type	**Cars** ☑	**Medium Trucks** ☐	**Heavy Trucks** ☐
Effective Distance	15		
Distance to Stop Sign	400		
Average Speed	15		
Average Daily Trips (ADT)	1163		
Night Fraction of ADT	15		
Road Gradient (%)			
Vehicle DNL	54		
Calculate Road #1 DNL	54	Reset	

Add Road Source | Add Rail Source

Airport Noise Level	
Loud Impulse Sounds?	○ Yes ○ No

Appendix C

Air Quality and Greenhouse Gas Modeling

250-260 N. Canon Drive

South Coast AQMD Air District, Annual

1.0 Project Characteristics

1.1 Land Usage

Land Uses	Size	Metric	Lot Acreage	Floor Surface Area	Population
Enclosed Parking with Elevator	21.38	1000sqft	0.00	21,380.00	0
Quality Restaurant	13.95	1000sqft	0.16	13,950.00	0

1.2 Other Project Characteristics

Urbanization	Urban	**Wind Speed (m/s)**	2.2	**Precipitation Freq (Days)**	31
Climate Zone	9			**Operational Year**	2019
Utility Company	Southern California Edison				
CO2 Intensity (lb/MWhr)	630.89	**CH4 Intensity (lb/MWhr)**	0.029	**N2O Intensity (lb/MWhr)**	0.006

1.3 User Entered Comments & Non-Default Data

Project Characteristics -

Land Use - from Project Plans

Construction Phase - Based on 18-20 month construction schedule

Grading - Estimates from BH

Architectural Coating - SCAQMD Rule 1113

Vehicle Trips - Based on traffic study

Area Coating - SCAQMD Rule 1113

Construction Off-road Equipment Mitigation - SCAQMD Rule 403

Area Mitigation - SCAQMD Rule 1113

Waste Mitigation - 78% waste diversion is standard in BH

Table Name	Column Name	Default Value	New Value
tblArchitecturalCoating	EF_Nonresidential_Exterior	250.00	50.00
tblArchitecturalCoating	EF_Nonresidential_Interior	250.00	50.00
tblArchitecturalCoating	EF_Residential_Exterior	100.00	50.00
tblAreaCoating	Area_EF_Nonresidential_Exterior	250	50
tblAreaMitigation	UseLowVOCPaintNonresidentialInteriorValue	250	50
tblAreaMitigation	UseLowVOCPaintResidentialExteriorValue	100	50
tblConstructionPhase	NumDays	5.00	65.00
tblConstructionPhase	NumDays	100.00	282.00
tblConstructionPhase	NumDays	10.00	21.00
tblConstructionPhase	NumDays	2.00	41.00
tblConstructionPhase	NumDays	5.00	35.00
tblConstructionPhase	NumDays	1.00	11.00
tblConstructionPhase	PhaseEndDate	8/10/2018	7/1/2018
tblConstructionPhase	PhaseEndDate	8/17/2018	6/30/2018
tblConstructionPhase	PhaseStartDate	5/12/2018	4/1/2018
tblConstructionPhase	PhaseStartDate	7/2/2018	5/12/2018
tblGrading	AcresOfGrading	5.50	0.16
tblGrading	MaterialExported	0.00	15,278.00
tblLandUse	LotAcreage	0.49	0.00
tblLandUse	LotAcreage	0.32	0.16
tblProjectCharacteristics	OperationalYear	2014	2019
tblTripsAndVMT	HaulingTripNumber	1,910.00	0.00
tblVehicleTrips	ST_TR	94.36	50.60
tblVehicleTrips	SU_TR	72.16	50.60
tblVehicleTrips	WD_TR	89.95	50.60

2.0 Emissions Summary

2.1 Overall Construction

Unmitigated Construction

	ROG	NOx	CO	SO2	Fugitive PM10	Exhaust PM10	PM10 Total	Fugitive PM2.5	Exhaust PM2.5	PM2.5 Total	Bio- CO2	NBio- CO2	Total CO2	CH4	N2O	CO2e
Year	tons/yr										MT/yr					
2017	0.2052	1.6349	1.2157	1.8400e-003	0.0389	0.1076	0.1465	0.0147	0.0998	0.1144	0.0000	164.4911	164.4911	0.0391	0.0000	165.3127
2018	0.1828	0.7635	0.6383	1.0400e-003	0.0141	0.0477	0.0618	3.7800e-003	0.0443	0.0481	0.0000	90.3073	90.3073	0.0214	0.0000	90.7560
Total	**0.3880**	**2.3984**	**1.8540**	**2.8800e-003**	**0.0530**	**0.1553**	**0.2083**	**0.0185**	**0.1441**	**0.1625**	**0.0000**	**254.7984**	**254.7984**	**0.0605**	**0.0000**	**256.0687**

Mitigated Construction

	ROG	NOx	CO	SO2	Fugitive PM10	Exhaust PM10	PM10 Total	Fugitive PM2.5	Exhaust PM2.5	PM2.5 Total	Bio- CO2	NBio- CO2	Total CO2	CH4	N2O	CO2e
Year	tons/yr										MT/yr					
2017	0.2050	1.6330	1.2144	1.8400e-003	0.0299	0.1075	0.1374	9.9400e-003	0.0996	0.1096	0.0000	164.3288	164.3288	0.0391	0.0000	165.1494
2018	0.1827	0.7626	0.6377	1.0400e-003	0.0141	0.0476	0.0617	3.7800e-003	0.0443	0.0481	0.0000	90.2191	90.2191	0.0213	0.0000	90.6673
Total	**0.3877**	**2.3956**	**1.8521**	**2.8800e-003**	**0.0440**	**0.1551**	**0.1991**	**0.0137**	**0.1439**	**0.1576**	**0.0000**	**254.5479**	**254.5479**	**0.0604**	**0.0000**	**255.8167**

	ROG	NOx	CO	SO2	Fugitive PM10	Exhaust PM10	PM10 Total	Fugitive PM2.5	Exhaust PM2.5	PM2.5 Total	Bio- CO2	NBio-CO2	Total CO2	CH4	N20	CO2e
Percent Reduction	**0.0722**	**0.1147**	**0.1030**	**0.0000**	**16.9936**	**0.1159**	**4.4165**	**25.6771**	**0.1180**	**3.0208**	**0.0000**	**0.0983**	**0.0983**	**0.1157**	**0.0000**	**0.0984**

2.2 Overall Operational

Unmitigated Operational

	ROG	NOx	CO	SO2	Fugitive PM10	Exhaust PM10	PM10 Total	Fugitive PM2.5	Exhaust PM2.5	PM2.5 Total	Bio- CO2	NBio- CO2	Total CO2	CH4	N2O	CO2e
Category	tons/yr										MT/yr					
Area	0.1605	0.0000	4.6000e-004	0.0000		0.0000	0.0000		0.0000	0.0000	0.0000	8.8000e-004	8.8000e-004	0.0000	0.0000	9.3000e-004
Energy	0.0175	0.1593	0.1338	9.6000e-004		0.0121	0.0121		0.0121	0.0121	0.0000	401.9615	401.9615	0.0138	5.3500e-003	403.9114
Mobile	0.6335	0.6184	2.6670	5.7800e-003	0.3809	8.4600e-003	0.3894	0.1019	7.8000e-003	0.1097	0.0000	420.2190	420.2190	0.0163	0.0000	420.5613
Waste						0.0000	0.0000		0.0000	0.0000	2.5841	0.0000	2.5841	0.1527	0.0000	5.7911
Water						0.0000	0.0000		0.0000	0.0000	1.3434	16.6370	17.9804	0.1387	3.4200e-003	21.9529
Total	**0.8115**	**0.7778**	**2.8013**	**6.7400e-003**	**0.3809**	**0.0206**	**0.4015**	**0.1019**	**0.0199**	**0.1218**	**3.9274**	**838.8184**	**842.7459**	**0.3216**	**8.7700e-003**	**852.2177**

2.2 Overall Operational

Mitigated Operational

	ROG	NOx	CO	SO2	Fugitive PM10	Exhaust PM10	PM10 Total	Fugitive PM2.5	Exhaust PM2.5	PM2.5 Total	Bio- CO2	NBio- CO2	Total CO2	CH4	N2O	CO2e
Category	tons/yr										MT/yr					
Area	0.1605	0.0000	4.6000e-004	0.0000		0.0000	0.0000		0.0000	0.0000	0.0000	8.8000e-004	8.8000e-004	0.0000	0.0000	9.3000e-004
Energy	0.0175	0.1593	0.1338	9.6000e-004		0.0121	0.0121		0.0121	0.0121	0.0000	401.9615	401.9615	0.0138	5.3500e-003	403.9114
Mobile	0.6335	0.6184	2.6670	5.7800e-003	0.3809	8.4600e-003	0.3894	0.1019	7.8000e-003	0.1097	0.0000	420.2190	420.2190	0.0163	0.0000	420.5613
Waste						0.0000	0.0000		0.0000	0.0000	0.5685	0.0000	0.5685	0.0336	0.0000	1.2740
Water						0.0000	0.0000		0.0000	0.0000	1.3434	16.6370	17.9804	0.1387	3.4100e-003	21.9508
Total	**0.8115**	**0.7778**	**2.8013**	**6.7400e-003**	**0.3809**	**0.0206**	**0.4015**	**0.1019**	**0.0199**	**0.1218**	**1.9119**	**838.8184**	**840.7303**	**0.2024**	**8.7600e-003**	**847.6985**

	ROG	NOx	CO	SO2	Fugitive PM10	Exhaust PM10	PM10 Total	Fugitive PM2.5	Exhaust PM2.5	PM2.5 Total	Bio- CO2	NBio-CO2	Total CO2	CH4	N20	CO2e
Percent Reduction	**0.0000**	**0.0000**	**0.0000**	**0.0000**	**0.0000**	**0.0000**	**0.0000**	**0.0000**	**0.0000**	**0.0000**	**51.3205**	**0.0000**	**0.2392**	**37.0483**	**0.1140**	**0.5303**

3.0 Construction Detail

Construction Phase

Phase Number	Phase Name	Phase Type	Start Date	End Date	Num Days Week	Num Days	Phase Description
1	Demolition	Demolition	1/1/2017	1/30/2017	5	21	
2	Site Preparation	Site Preparation	1/31/2017	2/14/2017	5	11	
3	Grading	Grading	2/15/2017	4/12/2017	5	41	
4	Building Construction	Building Construction	4/13/2017	5/11/2018	5	282	
5	Architectural Coating	Architectural Coating	4/1/2018	7/1/2018	5	65	
6	Paving	Paving	5/12/2018	6/30/2018	5	35	

OffRoad Equipment

Phase Name	Offroad Equipment Type	Amount	Usage Hours	Horse Power	Load Factor
Architectural Coating	Air Compressors	1	6.00	78	0.48
Paving	Cement and Mortar Mixers	4	6.00	9	0.56
Demolition	Concrete/Industrial Saws	1	8.00	81	0.73
Grading	Concrete/Industrial Saws	1	8.00	81	0.73
Building Construction	Cranes	1	4.00	226	0.29
Building Construction	Forklifts	2	6.00	89	0.20
Site Preparation	Graders	1	8.00	174	0.41
Paving	Pavers	1	7.00	125	0.42
Paving	Rollers	1	7.00	80	0.38
Demolition	Rubber Tired Dozers	1	1.00	255	0.40
Grading	Rubber Tired Dozers	1	1.00	255	0.40
Building Construction	Tractors/Loaders/Backhoes	2	8.00	97	0.37
Demolition	Tractors/Loaders/Backhoes	2	6.00	97	0.37
Grading	Tractors/Loaders/Backhoes	2	6.00	97	0.37
Paving	Tractors/Loaders/Backhoes	1	7.00	97	0.37
Site Preparation	Tractors/Loaders/Backhoes	1	8.00	97	0.37

Trips and VMT

Phase Name	Offroad Equipment Count	Worker Trip Number	Vendor Trip Number	Hauling Trip Number	Worker Trip Length	Vendor Trip Length	Hauling Trip Length	Worker Vehicle Class	Vendor Vehicle Class	Hauling Vehicle Class
Demolition	4	10.00	0.00	0.00	14.70	6.90	20.00	LD_Mix	HDT_Mix	HHDT
Site Preparation	2	5.00	0.00	0.00	14.70	6.90	20.00	LD_Mix	HDT_Mix	HHDT
Grading	4	10.00	0.00	0.00	14.70	6.90	20.00	LD_Mix	HDT_Mix	HHDT
Building Construction	5	15.00	6.00	0.00	14.70	6.90	20.00	LD_Mix	HDT_Mix	HHDT
Paving	7	18.00	0.00	0.00	14.70	6.90	20.00	LD_Mix	HDT_Mix	HHDT
Architectural Coating	1	3.00	0.00	0.00	14.70	6.90	20.00	LD_Mix	HDT_Mix	HHDT

3.1 Mitigation Measures Construction

Water Exposed Area

Clean Paved Roads

3.2 Demolition - 2017

Unmitigated Construction On-Site

Acres of Grading: 0.16

	ROG	NOx	CO	SO2	Fugitive PM10	Exhaust PM10	PM10 Total	Fugitive PM2.5	Exhaust PM2.5	PM2.5 Total	Bio- CO2	NBio- CO2	Total CO2	CH4	N2O	CO2e
Category	tons/yr										MT/yr					
Off-Road	0.0127	0.1100	0.0901	1.3000e-004		7.6300e-003	7.6300e-003		7.2800e-003	7.2800e-003	0.0000	11.2763	11.2763	2.2200e-003	0.0000	11.3230
Total	**0.0127**	**0.1100**	**0.0901**	**1.3000e-004**		**7.6300e-003**	**7.6300e-003**		**7.2800e-003**	**7.2800e-003**	**0.0000**	**11.2763**	**11.2763**	**2.2200e-003**	**0.0000**	**11.3230**

3.2 Demolition - 2017

Unmitigated Construction Off-Site

Acres of Grading: 0.16

	ROG	NOx	CO	SO2	Fugitive PM10	Exhaust PM10	PM10 Total	Fugitive PM2.5	Exhaust PM2.5	PM2.5 Total	Bio- CO2	NBio- CO2	Total CO2	CH4	N2O	CO2e
Category	tons/yr										MT/yr					
Hauling	0.0000	0.0000	0.0000	0.0000	0.0000	0.0000	0.0000	0.0000	0.0000	0.0000	0.0000	0.0000	0.0000	0.0000	0.0000	0.0000
Vendor	0.0000	0.0000	0.0000	0.0000	0.0000	0.0000	0.0000	0.0000	0.0000	0.0000	0.0000	0.0000	0.0000	0.0000	0.0000	0.0000
Worker	2.0400e-003	5.6000e-004	5.8100e-003	1.0000e-005	1.1500e-003	1.0000e-005	1.1600e-003	3.1000e-004	1.0000e-005	3.1000e-004	0.0000	1.0378	1.0378	5.0000e-005	0.0000	1.0390
Total	**2.0400e-003**	**5.6000e-004**	**5.8100e-003**	**1.0000e-005**	**1.1500e-003**	**1.0000e-005**	**1.1600e-003**	**3.1000e-004**	**1.0000e-005**	**3.1000e-004**	**0.0000**	**1.0378**	**1.0378**	**5.0000e-005**	**0.0000**	**1.0390**

Mitigated Construction On-Site

	ROG	NOx	CO	SO2	Fugitive PM10	Exhaust PM10	PM10 Total	Fugitive PM2.5	Exhaust PM2.5	PM2.5 Total	Bio- CO2	NBio- CO2	Total CO2	CH4	N2O	CO2e
Category	tons/yr										MT/yr					
Off-Road	0.0126	0.1099	0.0900	1.3000e-004		7.6200e-003	7.6200e-003		7.2700e-003	7.2700e-003	0.0000	11.2629	11.2629	2.2200e-003	0.0000	11.3095
Total	**0.0126**	**0.1099**	**0.0900**	**1.3000e-004**		**7.6200e-003**	**7.6200e-003**		**7.2700e-003**	**7.2700e-003**	**0.0000**	**11.2629**	**11.2629**	**2.2200e-003**	**0.0000**	**11.3095**

3.2 Demolition - 2017

Mitigated Construction Off-Site

Acres of Grading: 0.16

	ROG	NOx	CO	SO2	Fugitive PM10	Exhaust PM10	PM10 Total	Fugitive PM2.5	Exhaust PM2.5	PM2.5 Total	Bio- CO2	NBio- CO2	Total CO2	CH4	N2O	CO2e
Category	tons/yr										MT/yr					
Hauling	0.0000	0.0000	0.0000	0.0000	0.0000	0.0000	0.0000	0.0000	0.0000	0.0000	0.0000	0.0000	0.0000	0.0000	0.0000	0.0000
Vendor	0.0000	0.0000	0.0000	0.0000	0.0000	0.0000	0.0000	0.0000	0.0000	0.0000	0.0000	0.0000	0.0000	0.0000	0.0000	0.0000
Worker	2.0400e-003	5.6000e-004	5.8100e-003	1.0000e-005	1.1500e-003	1.0000e-005	1.1600e-003	3.1000e-004	1.0000e-005	3.1000e-004	0.0000	1.0378	1.0378	5.0000e-005	0.0000	1.0390
Total	**2.0400e-003**	**5.6000e-004**	**5.8100e-003**	**1.0000e-005**	**1.1500e-003**	**1.0000e-005**	**1.1600e-003**	**3.1000e-004**	**1.0000e-005**	**3.1000e-004**	**0.0000**	**1.0378**	**1.0378**	**5.0000e-005**	**0.0000**	**1.0390**

3.3 Site Preparation - 2017

Unmitigated Construction On-Site

Acres of Grading: 0

	ROG	NOx	CO	SO2	Fugitive PM10	Exhaust PM10	PM10 Total	Fugitive PM2.5	Exhaust PM2.5	PM2.5 Total	Bio- CO2	NBio- CO2	Total CO2	CH4	N2O	CO2e
Category	tons/yr										MT/yr					
Fugitive Dust					8.0000e-005	0.0000	8.0000e-005	1.0000e-005	0.0000	1.0000e-005	0.0000	0.0000	0.0000	0.0000	0.0000	0.0000
Off-Road	6.9800e-003	0.0698	0.0398	5.0000e-005		4.2400e-003	4.2400e-003		3.9000e-003	3.9000e-003	0.0000	4.7693	4.7693	1.4600e-003	0.0000	4.8000
Total	**6.9800e-003**	**0.0698**	**0.0398**	**5.0000e-005**	**8.0000e-005**	**4.2400e-003**	**4.3200e-003**	**1.0000e-005**	**3.9000e-003**	**3.9100e-003**	**0.0000**	**4.7693**	**4.7693**	**1.4600e-003**	**0.0000**	**4.8000**

3.3 Site Preparation - 2017

Unmitigated Construction Off-Site

Acres of Grading: 0

	ROG	NOx	CO	SO2	Fugitive PM10	Exhaust PM10	PM10 Total	Fugitive PM2.5	Exhaust PM2.5	PM2.5 Total	Bio- CO2	NBio- CO2	Total CO2	CH4	N2O	CO2e
Category	tons/yr										MT/yr					
Hauling	0.0000	0.0000	0.0000	0.0000	0.0000	0.0000	0.0000	0.0000	0.0000	0.0000	0.0000	0.0000	0.0000	0.0000	0.0000	0.0000
Vendor	0.0000	0.0000	0.0000	0.0000	0.0000	0.0000	0.0000	0.0000	0.0000	0.0000	0.0000	0.0000	0.0000	0.0000	0.0000	0.0000
Worker	5.4000e-004	1.5000e-004	1.5200e-003	0.0000	3.0000e-004	0.0000	3.0000e-004	8.0000e-005	0.0000	8.0000e-005	0.0000	0.2718	0.2718	1.0000e-005	0.0000	0.2721
Total	**5.4000e-004**	**1.5000e-004**	**1.5200e-003**	**0.0000**	**3.0000e-004**	**0.0000**	**3.0000e-004**	**8.0000e-005**	**0.0000**	**8.0000e-005**	**0.0000**	**0.2718**	**0.2718**	**1.0000e-005**	**0.0000**	**0.2721**

Mitigated Construction On-Site

	ROG	NOx	CO	SO2	Fugitive PM10	Exhaust PM10	PM10 Total	Fugitive PM2.5	Exhaust PM2.5	PM2.5 Total	Bio- CO2	NBio- CO2	Total CO2	CH4	N2O	CO2e
Category	tons/yr										MT/yr					
Fugitive Dust					4.0000e-005	0.0000	4.0000e-005	0.0000	0.0000	0.0000	0.0000	0.0000	0.0000	0.0000	0.0000	0.0000
Off-Road	6.9700e-003	0.0697	0.0397	5.0000e-005		4.2300e-003	4.2300e-003		3.8900e-003	3.8900e-003	0.0000	4.7636	4.7636	1.4600e-003	0.0000	4.7943
Total	**6.9700e-003**	**0.0697**	**0.0397**	**5.0000e-005**	**4.0000e-005**	**4.2300e-003**	**4.2700e-003**	**0.0000**	**3.8900e-003**	**3.8900e-003**	**0.0000**	**4.7636**	**4.7636**	**1.4600e-003**	**0.0000**	**4.7943**

3.3 Site Preparation - 2017

Mitigated Construction Off-Site

Acres of Grading: 0

	ROG	NOx	CO	SO2	Fugitive PM10	Exhaust PM10	PM10 Total	Fugitive PM2.5	Exhaust PM2.5	PM2.5 Total	Bio- CO2	NBio- CO2	Total CO2	CH4	N2O	CO2e
Category	tons/yr										MT/yr					
Hauling	0.0000	0.0000	0.0000	0.0000	0.0000	0.0000	0.0000	0.0000	0.0000	0.0000	0.0000	0.0000	0.0000	0.0000	0.0000	0.0000
Vendor	0.0000	0.0000	0.0000	0.0000	0.0000	0.0000	0.0000	0.0000	0.0000	0.0000	0.0000	0.0000	0.0000	0.0000	0.0000	0.0000
Worker	5.4000e-004	1.5000e-004	1.5200e-003	0.0000	3.0000e-004	0.0000	3.0000e-004	8.0000e-005	0.0000	8.0000e-005	0.0000	0.2718	0.2718	1.0000e-005	0.0000	0.2721
Total	**5.4000e-004**	**1.5000e-004**	**1.5200e-003**	**0.0000**	**3.0000e-004**	**0.0000**	**3.0000e-004**	**8.0000e-005**	**0.0000**	**8.0000e-005**	**0.0000**	**0.2718**	**0.2718**	**1.0000e-005**	**0.0000**	**0.2721**

3.4 Grading - 2017

Unmitigated Construction On-Site

	ROG	NOx	CO	SO2	Fugitive PM10	Exhaust PM10	PM10 Total	Fugitive PM2.5	Exhaust PM2.5	PM2.5 Total	Bio- CO2	NBio- CO2	Total CO2	CH4	N2O	CO2e
Category	tons/yr										MT/yr					
Fugitive Dust					0.0163	0.0000	0.0163	8.6100e-003	0.0000	8.6100e-003	0.0000	0.0000	0.0000	0.0000	0.0000	0.0000
Off-Road	0.0247	0.2148	0.1759	2.5000e-004		0.0149	0.0149		0.0142	0.0142	0.0000	22.0157	22.0157	4.3400e-003	0.0000	22.1068
Total	**0.0247**	**0.2148**	**0.1759**	**2.5000e-004**	**0.0163**	**0.0149**	**0.0312**	**8.6100e-003**	**0.0142**	**0.0228**	**0.0000**	**22.0157**	**22.0157**	**4.3400e-003**	**0.0000**	**22.1068**

3.4 Grading - 2017

Unmitigated Construction Off-Site

	ROG	NOx	CO	SO2	Fugitive PM10	Exhaust PM10	PM10 Total	Fugitive PM2.5	Exhaust PM2.5	PM2.5 Total	Bio- CO2	NBio- CO2	Total CO2	CH4	N2O	CO2e
Category	tons/yr										MT/yr					
Hauling	0.0000	0.0000	0.0000	0.0000	0.0000	0.0000	0.0000	0.0000	0.0000	0.0000	0.0000	0.0000	0.0000	0.0000	0.0000	0.0000
Vendor	0.0000	0.0000	0.0000	0.0000	0.0000	0.0000	0.0000	0.0000	0.0000	0.0000	0.0000	0.0000	0.0000	0.0000	0.0000	0.0000
Worker	3.9900e-003	1.0900e-003	0.0113	3.0000e-005	2.2500e-003	2.0000e-005	2.2700e-003	6.0000e-004	2.0000e-005	6.1000e-004	0.0000	2.0262	2.0262	1.0000e-004	0.0000	2.0284
Total	**3.9900e-003**	**1.0900e-003**	**0.0113**	**3.0000e-005**	**2.2500e-003**	**2.0000e-005**	**2.2700e-003**	**6.0000e-004**	**2.0000e-005**	**6.1000e-004**	**0.0000**	**2.0262**	**2.0262**	**1.0000e-004**	**0.0000**	**2.0284**

Mitigated Construction On-Site

	ROG	NOx	CO	SO2	Fugitive PM10	Exhaust PM10	PM10 Total	Fugitive PM2.5	Exhaust PM2.5	PM2.5 Total	Bio- CO2	NBio- CO2	Total CO2	CH4	N2O	CO2e
Category	tons/yr										MT/yr					
Fugitive Dust					7.3300e-003	0.0000	7.3300e-003	3.8800e-003	0.0000	3.8800e-003	0.0000	0.0000	0.0000	0.0000	0.0000	0.0000
Off-Road	0.0247	0.2145	0.1757	2.5000e-004		0.0149	0.0149		0.0142	0.0142	0.0000	21.9895	21.9895	4.3300e-003	0.0000	22.0805
Total	**0.0247**	**0.2145**	**0.1757**	**2.5000e-004**	**7.3300e-003**	**0.0149**	**0.0222**	**3.8800e-003**	**0.0142**	**0.0181**	**0.0000**	**21.9895**	**21.9895**	**4.3300e-003**	**0.0000**	**22.0805**

3.4 Grading - 2017

Mitigated Construction Off-Site

	ROG	NOx	CO	SO2	Fugitive PM10	Exhaust PM10	PM10 Total	Fugitive PM2.5	Exhaust PM2.5	PM2.5 Total	Bio- CO2	NBio- CO2	Total CO2	CH4	N2O	CO2e
Category	tons/yr										MT/yr					
Hauling	0.0000	0.0000	0.0000	0.0000	0.0000	0.0000	0.0000	0.0000	0.0000	0.0000	0.0000	0.0000	0.0000	0.0000	0.0000	0.0000
Vendor	0.0000	0.0000	0.0000	0.0000	0.0000	0.0000	0.0000	0.0000	0.0000	0.0000	0.0000	0.0000	0.0000	0.0000	0.0000	0.0000
Worker	3.9900e-003	1.0900e-003	0.0113	3.0000e-005	2.2500e-003	2.0000e-005	2.2700e-003	6.0000e-004	2.0000e-005	6.1000e-004	0.0000	2.0262	2.0262	1.0000e-004	0.0000	2.0284
Total	**3.9900e-003**	**1.0900e-003**	**0.0113**	**3.0000e-005**	**2.2500e-003**	**2.0000e-005**	**2.2700e-003**	**6.0000e-004**	**2.0000e-005**	**6.1000e-004**	**0.0000**	**2.0262**	**2.0262**	**1.0000e-004**	**0.0000**	**2.0284**

3.5 Building Construction - 2017

Unmitigated Construction On-Site

Acres of Paving: 0

	ROG	NOx	CO	SO2	Fugitive PM10	Exhaust PM10	PM10 Total	Fugitive PM2.5	Exhaust PM2.5	PM2.5 Total	Bio- CO2	NBio- CO2	Total CO2	CH4	N2O	CO2e
Category	tons/yr										MT/yr					
Off-Road	0.1191	1.1850	0.7517	1.0600e-003		0.0800	0.0800		0.0736	0.0736	0.0000	98.3535	98.3535	0.0301	0.0000	98.9863
Total	**0.1191**	**1.1850**	**0.7517**	**1.0600e-003**		**0.0800**	**0.0800**		**0.0736**	**0.0736**	**0.0000**	**98.3535**	**98.3535**	**0.0301**	**0.0000**	**98.9863**

3.5 Building Construction - 2017

Unmitigated Construction Off-Site

Acres of Paving: 0

	ROG	NOx	CO	SO2	Fugitive PM10	Exhaust PM10	PM10 Total	Fugitive PM2.5	Exhaust PM2.5	PM2.5 Total	Bio- CO2	NBio- CO2	Total CO2	CH4	N2O	CO2e
Category	tons/yr										MT/yr					
Hauling	0.0000	0.0000	0.0000	0.0000	0.0000	0.0000	0.0000	0.0000	0.0000	0.0000	0.0000	0.0000	0.0000	0.0000	0.0000	0.0000
Vendor	7.8500e-003	0.0461	0.0619	1.2000e-004	3.4500e-003	7.1000e-004	4.1700e-003	9.9000e-004	6.6000e-004	1.6400e-003	0.0000	10.8779	10.8779	8.0000e-005	0.0000	10.8795
Worker	0.0273	7.4800e-003	0.0776	1.9000e-004	0.0154	1.3000e-004	0.0155	4.0900e-003	1.2000e-004	4.2000e-003	0.0000	13.8625	13.8625	7.2000e-004	0.0000	13.8775
Total	**0.0352**	**0.0535**	**0.1395**	**3.1000e-004**	**0.0188**	**8.4000e-004**	**0.0197**	**5.0800e-003**	**7.8000e-004**	**5.8400e-003**	**0.0000**	**24.7403**	**24.7403**	**8.0000e-004**	**0.0000**	**24.7570**

Mitigated Construction On-Site

	ROG	NOx	CO	SO2	Fugitive PM10	Exhaust PM10	PM10 Total	Fugitive PM2.5	Exhaust PM2.5	PM2.5 Total	Bio- CO2	NBio- CO2	Total CO2	CH4	N2O	CO2e
Category	tons/yr										MT/yr					
Off-Road	0.1190	1.1836	0.7508	1.0600e-003		0.0799	0.0799		0.0735	0.0735	0.0000	98.2365	98.2365	0.0301	0.0000	98.8686
Total	**0.1190**	**1.1836**	**0.7508**	**1.0600e-003**		**0.0799**	**0.0799**		**0.0735**	**0.0735**	**0.0000**	**98.2365**	**98.2365**	**0.0301**	**0.0000**	**98.8686**

3.5 Building Construction - 2017

Mitigated Construction Off-Site

Acres of Paving: 0

	ROG	NOx	CO	SO2	Fugitive PM10	Exhaust PM10	PM10 Total	Fugitive PM2.5	Exhaust PM2.5	PM2.5 Total	Bio- CO2	NBio- CO2	Total CO2	CH4	N2O	CO2e
Category	tons/yr										MT/yr					
Hauling	0.0000	0.0000	0.0000	0.0000	0.0000	0.0000	0.0000	0.0000	0.0000	0.0000	0.0000	0.0000	0.0000	0.0000	0.0000	0.0000
Vendor	7.8500e-003	0.0461	0.0619	1.2000e-004	3.4500e-003	7.1000e-004	4.1700e-003	9.9000e-004	6.6000e-004	1.6400e-003	0.0000	10.8779	10.8779	8.0000e-005	0.0000	10.8795
Worker	0.0273	7.4800e-003	0.0776	1.9000e-004	0.0154	1.3000e-004	0.0155	4.0900e-003	1.2000e-004	4.2000e-003	0.0000	13.8625	13.8625	7.2000e-004	0.0000	13.8775
Total	**0.0352**	**0.0535**	**0.1395**	**3.1000e-004**	**0.0188**	**8.4000e-004**	**0.0197**	**5.0800e-003**	**7.8000e-004**	**5.8400e-003**	**0.0000**	**24.7403**	**24.7403**	**8.0000e-004**	**0.0000**	**24.7570**

3.5 Building Construction - 2018

Unmitigated Construction On-Site

	ROG	NOx	CO	SO2	Fugitive PM10	Exhaust PM10	PM10 Total	Fugitive PM2.5	Exhaust PM2.5	PM2.5 Total	Bio- CO2	NBio- CO2	Total CO2	CH4	N2O	CO2e
Category	tons/yr										MT/yr					
Off-Road	0.0512	0.5205	0.3669	5.4000e-004		0.0335	0.0335		0.0308	0.0308	0.0000	49.1348	49.1348	0.0153	0.0000	49.4560
Total	**0.0512**	**0.5205**	**0.3669**	**5.4000e-004**		**0.0335**	**0.0335**		**0.0308**	**0.0308**	**0.0000**	**49.1348**	**49.1348**	**0.0153**	**0.0000**	**49.4560**

3.5 Building Construction - 2018

Unmitigated Construction Off-Site

Acres of Paving: 0

	ROG	NOx	CO	SO2	Fugitive PM10	Exhaust PM10	PM10 Total	Fugitive PM2.5	Exhaust PM2.5	PM2.5 Total	Bio- CO2	NBio- CO2	Total CO2	CH4	N2O	CO2e
Category	tons/yr										MT/yr					
Hauling	0.0000	0.0000	0.0000	0.0000	0.0000	0.0000	0.0000	0.0000	0.0000	0.0000	0.0000	0.0000	0.0000	0.0000	0.0000	0.0000
Vendor	3.6600e-003	0.0215	0.0301	6.0000e-005	1.7500e-003	3.4000e-004	2.1000e-003	5.0000e-004	3.1000e-004	8.2000e-004	0.0000	5.4334	5.4334	4.0000e-005	0.0000	5.4343
Worker	0.0129	3.4400e-003	0.0357	1.0000e-004	7.8200e-003	6.0000e-005	7.8800e-003	2.0800e-003	6.0000e-005	2.1300e-003	0.0000	6.7796	6.7796	3.4000e-004	0.0000	6.7867
Total	**0.0166**	**0.0249**	**0.0658**	**1.6000e-004**	**9.5700e-003**	**4.0000e-004**	**9.9800e-003**	**2.5800e-003**	**3.7000e-004**	**2.9500e-003**	**0.0000**	**12.2130**	**12.2130**	**3.8000e-004**	**0.0000**	**12.2209**

Mitigated Construction On-Site

	ROG	NOx	CO	SO2	Fugitive PM10	Exhaust PM10	PM10 Total	Fugitive PM2.5	Exhaust PM2.5	PM2.5 Total	Bio- CO2	NBio- CO2	Total CO2	CH4	N2O	CO2e
Category	tons/yr										MT/yr					
Off-Road	0.0512	0.5199	0.3665	5.4000e-004		0.0335	0.0335		0.0308	0.0308	0.0000	49.0763	49.0763	0.0153	0.0000	49.3972
Total	**0.0512**	**0.5199**	**0.3665**	**5.4000e-004**		**0.0335**	**0.0335**		**0.0308**	**0.0308**	**0.0000**	**49.0763**	**49.0763**	**0.0153**	**0.0000**	**49.3972**

3.5 Building Construction - 2018

Mitigated Construction Off-Site

Acres of Paving: 0

	ROG	NOx	CO	SO2	Fugitive PM10	Exhaust PM10	PM10 Total	Fugitive PM2.5	Exhaust PM2.5	PM2.5 Total	Bio- CO2	NBio- CO2	Total CO2	CH4	N2O	CO2e
Category	tons/yr										MT/yr					
Hauling	0.0000	0.0000	0.0000	0.0000	0.0000	0.0000	0.0000	0.0000	0.0000	0.0000	0.0000	0.0000	0.0000	0.0000	0.0000	0.0000
Vendor	3.6600e-003	0.0215	0.0301	6.0000e-005	1.7500e-003	3.4000e-004	2.1000e-003	5.0000e-004	3.1000e-004	8.2000e-004	0.0000	5.4334	5.4334	4.0000e-005	0.0000	5.4343
Worker	0.0129	3.4400e-003	0.0357	1.0000e-004	7.8200e-003	6.0000e-005	7.8800e-003	2.0800e-003	6.0000e-005	2.1300e-003	0.0000	6.7796	6.7796	3.4000e-004	0.0000	6.7867
Total	**0.0166**	**0.0249**	**0.0658**	**1.6000e-004**	**9.5700e-003**	**4.0000e-004**	**9.9800e-003**	**2.5800e-003**	**3.7000e-004**	**2.9500e-003**	**0.0000**	**12.2130**	**12.2130**	**3.8000e-004**	**0.0000**	**12.2209**

3.6 Architectural Coating - 2018

Unmitigated Construction On-Site

	ROG	NOx	CO	SO2	Fugitive PM10	Exhaust PM10	PM10 Total	Fugitive PM2.5	Exhaust PM2.5	PM2.5 Total	Bio- CO2	NBio- CO2	Total CO2	CH4	N2O	CO2e
Category	tons/yr										MT/yr					
Archit. Coating	0.0819					0.0000	0.0000		0.0000	0.0000	0.0000	0.0000	0.0000	0.0000	0.0000	0.0000
Off-Road	9.7100e-003	0.0652	0.0603	1.0000e-004		4.8900e-003	4.8900e-003		4.8900e-003	4.8900e-003	0.0000	8.2981	8.2981	7.9000e-004	0.0000	8.3147
Total	**0.0916**	**0.0652**	**0.0603**	**1.0000e-004**		**4.8900e-003**	**4.8900e-003**		**4.8900e-003**	**4.8900e-003**	**0.0000**	**8.2981**	**8.2981**	**7.9000e-004**	**0.0000**	**8.3147**

3.6 Architectural Coating - 2018

Unmitigated Construction Off-Site

	ROG	NOx	CO	SO2	Fugitive PM10	Exhaust PM10	PM10 Total	Fugitive PM2.5	Exhaust PM2.5	PM2.5 Total	Bio- CO2	NBio- CO2	Total CO2	CH4	N2O	CO2e
Category	tons/yr										MT/yr					
Hauling	0.0000	0.0000	0.0000	0.0000	0.0000	0.0000	0.0000	0.0000	0.0000	0.0000	0.0000	0.0000	0.0000	0.0000	0.0000	0.0000
Vendor	0.0000	0.0000	0.0000	0.0000	0.0000	0.0000	0.0000	0.0000	0.0000	0.0000	0.0000	0.0000	0.0000	0.0000	0.0000	0.0000
Worker	1.7700e-003	4.7000e-004	4.8900e-003	1.0000e-005	1.0700e-003	1.0000e-005	1.0800e-003	2.8000e-004	1.0000e-005	2.9000e-004	0.0000	0.9277	0.9277	5.0000e-005	0.0000	0.9287
Total	**1.7700e-003**	**4.7000e-004**	**4.8900e-003**	**1.0000e-005**	**1.0700e-003**	**1.0000e-005**	**1.0800e-003**	**2.8000e-004**	**1.0000e-005**	**2.9000e-004**	**0.0000**	**0.9277**	**0.9277**	**5.0000e-005**	**0.0000**	**0.9287**

Mitigated Construction On-Site

	ROG	NOx	CO	SO2	Fugitive PM10	Exhaust PM10	PM10 Total	Fugitive PM2.5	Exhaust PM2.5	PM2.5 Total	Bio- CO2	NBio- CO2	Total CO2	CH4	N2O	CO2e
Category	tons/yr										MT/yr					
Archit. Coating	0.0819					0.0000	0.0000		0.0000	0.0000	0.0000	0.0000	0.0000	0.0000	0.0000	0.0000
Off-Road	9.6900e-003	0.0651	0.0602	1.0000e-004		4.8900e-003	4.8900e-003		4.8900e-003	4.8900e-003	0.0000	8.2882	8.2882	7.9000e-004	0.0000	8.3048
Total	**0.0916**	**0.0651**	**0.0602**	**1.0000e-004**		**4.8900e-003**	**4.8900e-003**		**4.8900e-003**	**4.8900e-003**	**0.0000**	**8.2882**	**8.2882**	**7.9000e-004**	**0.0000**	**8.3048**

3.6 Architectural Coating - 2018

Mitigated Construction Off-Site

	ROG	NOx	CO	SO2	Fugitive PM10	Exhaust PM10	PM10 Total	Fugitive PM2.5	Exhaust PM2.5	PM2.5 Total	Bio- CO2	NBio- CO2	Total CO2	CH4	N2O	CO2e
Category	tons/yr										MT/yr					
Hauling	0.0000	0.0000	0.0000	0.0000	0.0000	0.0000	0.0000	0.0000	0.0000	0.0000	0.0000	0.0000	0.0000	0.0000	0.0000	0.0000
Vendor	0.0000	0.0000	0.0000	0.0000	0.0000	0.0000	0.0000	0.0000	0.0000	0.0000	0.0000	0.0000	0.0000	0.0000	0.0000	0.0000
Worker	1.7700e-003	4.7000e-004	4.8900e-003	1.0000e-005	1.0700e-003	1.0000e-005	1.0800e-003	2.8000e-004	1.0000e-005	2.9000e-004	0.0000	0.9277	0.9277	5.0000e-005	0.0000	0.9287
Total	**1.7700e-003**	**4.7000e-004**	**4.8900e-003**	**1.0000e-005**	**1.0700e-003**	**1.0000e-005**	**1.0800e-003**	**2.8000e-004**	**1.0000e-005**	**2.9000e-004**	**0.0000**	**0.9277**	**0.9277**	**5.0000e-005**	**0.0000**	**0.9287**

3.7 Paving - 2018

Unmitigated Construction On-Site

Residential Indoor: 0; Residential Outdoor: 0; Non-Residential Indoor: 52,995; Non-Residential Outdoor: 17,665

	ROG	NOx	CO	SO2	Fugitive PM10	Exhaust PM10	PM10 Total	Fugitive PM2.5	Exhaust PM2.5	PM2.5 Total	Bio- CO2	NBio- CO2	Total CO2	CH4	N2O	CO2e
Category	tons/yr										MT/yr					
Off-Road	0.0159	0.1509	0.1247	1.9000e-004		8.8400e-003	8.8400e-003		8.1900e-003	8.1900e-003	0.0000	16.7364	16.7364	4.7100e-003	0.0000	16.8354
Paving	0.0000					0.0000	0.0000		0.0000	0.0000	0.0000	0.0000	0.0000	0.0000	0.0000	0.0000
Total	**0.0159**	**0.1509**	**0.1247**	**1.9000e-004**		**8.8400e-003**	**8.8400e-003**		**8.1900e-003**	**8.1900e-003**	**0.0000**	**16.7364**	**16.7364**	**4.7100e-003**	**0.0000**	**16.8354**

3.7 Paving - 2018

Unmitigated Construction Off-Site

Residential Indoor: 0; Residential Outdoor: 0; Non-Residential Indoor: 52,995; Non-Residential Outdoor: 17,665

	ROG	NOx	CO	SO2	Fugitive PM10	Exhaust PM10	PM10 Total	Fugitive PM2.5	Exhaust PM2.5	PM2.5 Total	Bio- CO2	NBio- CO2	Total CO2	CH4	N2O	CO2e
Category	tons/yr										MT/yr					
Hauling	0.0000	0.0000	0.0000	0.0000	0.0000	0.0000	0.0000	0.0000	0.0000	0.0000	0.0000	0.0000	0.0000	0.0000	0.0000	0.0000
Vendor	0.0000	0.0000	0.0000	0.0000	0.0000	0.0000	0.0000	0.0000	0.0000	0.0000	0.0000	0.0000	0.0000	0.0000	0.0000	0.0000
Worker	5.7200e-003	1.5200e-003	0.0158	4.0000e-005	3.4600e-003	3.0000e-005	3.4800e-003	9.2000e-004	3.0000e-005	9.4000e-004	0.0000	2.9973	2.9973	1.5000e-004	0.0000	3.0004
Total	**5.7200e-003**	**1.5200e-003**	**0.0158**	**4.0000e-005**	**3.4600e-003**	**3.0000e-005**	**3.4800e-003**	**9.2000e-004**	**3.0000e-005**	**9.4000e-004**	**0.0000**	**2.9973**	**2.9973**	**1.5000e-004**	**0.0000**	**3.0004**

Mitigated Construction On-Site

	ROG	NOx	CO	SO2	Fugitive PM10	Exhaust PM10	PM10 Total	Fugitive PM2.5	Exhaust PM2.5	PM2.5 Total	Bio- CO2	NBio- CO2	Total CO2	CH4	N2O	CO2e
Category	tons/yr										MT/yr					
Off-Road	0.0159	0.1507	0.1246	1.9000e-004		8.8300e-003	8.8300e-003		8.1800e-003	8.1800e-003	0.0000	16.7165	16.7165	4.7100e-003	0.0000	16.8153
Paving	0.0000					0.0000	0.0000		0.0000	0.0000	0.0000	0.0000	0.0000	0.0000	0.0000	0.0000
Total	**0.0159**	**0.1507**	**0.1246**	**1.9000e-004**		**8.8300e-003**	**8.8300e-003**		**8.1800e-003**	**8.1800e-003**	**0.0000**	**16.7165**	**16.7165**	**4.7100e-003**	**0.0000**	**16.8153**

3.7 Paving - 2018

Mitigated Construction Off-Site

Residential Indoor: 0; Residential Outdoor: 0; Non-Residential Indoor: 52,995; Non-Residential Outdoor: 17,665

	ROG	NOx	CO	SO2	Fugitive PM10	Exhaust PM10	PM10 Total	Fugitive PM2.5	Exhaust PM2.5	PM2.5 Total	Bio- CO2	NBio- CO2	Total CO2	CH4	N2O	CO2e
Category	tons/yr										MT/yr					
Hauling	0.0000	0.0000	0.0000	0.0000	0.0000	0.0000	0.0000	0.0000	0.0000	0.0000	0.0000	0.0000	0.0000	0.0000	0.0000	0.0000
Vendor	0.0000	0.0000	0.0000	0.0000	0.0000	0.0000	0.0000	0.0000	0.0000	0.0000	0.0000	0.0000	0.0000	0.0000	0.0000	0.0000
Worker	5.7200e-003	1.5200e-003	0.0158	4.0000e-005	3.4600e-003	3.0000e-005	3.4800e-003	9.2000e-004	3.0000e-005	9.4000e-004	0.0000	2.9973	2.9973	1.5000e-004	0.0000	3.0004
Total	**5.7200e-003**	**1.5200e-003**	**0.0158**	**4.0000e-005**	**3.4600e-003**	**3.0000e-005**	**3.4800e-003**	**9.2000e-004**	**3.0000e-005**	**9.4000e-004**	**0.0000**	**2.9973**	**2.9973**	**1.5000e-004**	**0.0000**	**3.0004**

4.0 Operational Detail - Mobile

4.1 Mitigation Measures Mobile

	ROG	NOx	CO	SO2	Fugitive PM10	Exhaust PM10	PM10 Total	Fugitive PM2.5	Exhaust PM2.5	PM2.5 Total	Bio- CO2	NBio- CO2	Total CO2	CH4	N2O	CO2e
Category	tons/yr										MT/yr					
Mitigated	0.6335	0.6184	2.6670	5.7800e-003	0.3809	8.4600e-003	0.3894	0.1019	7.8000e-003	0.1097	0.0000	420.2190	420.2190	0.0163	0.0000	420.5613
Unmitigated	0.6335	0.6184	2.6670	5.7800e-003	0.3809	8.4600e-003	0.3894	0.1019	7.8000e-003	0.1097	0.0000	420.2190	420.2190	0.0163	0.0000	420.5613

4.2 Trip Summary Information

	Average Daily Trip Rate			Unmitigated	Mitigated
Land Use	Weekday	Saturday	Sunday	Annual VMT	Annual VMT
Enclosed Parking with Elevator	0.00	0.00	0.00		
Quality Restaurant	705.87	705.87	705.87	1,004,899	1,004,899
Total	705.87	705.87	705.87	1,004,899	1,004,899

4.3 Trip Type Information

	Miles			Trip %			Trip Purpose %		
Land Use	H-W or C-W	H-S or C-C	H-O or C-NW	H-W or C-W	H-S or C-C	H-O or C-NW	Primary	Diverted	Pass-by
Enclosed Parking with Elevator	16.60	8.40	6.90	0.00	0.00	0.00	0	0	0
Quality Restaurant	16.60	8.40	6.90	12.00	69.00	19.00	38	18	44

4.4 Fleet Mix

LDA	LDT1	LDT2	MDV	LHD1	LHD2	MHD	HHD	OBUS	UBUS	MCY	SBUS	MH
0.510142	0.059804	0.180842	0.139058	0.042603	0.006701	0.016107	0.033206	0.001939	0.002487	0.004384	0.000580	0.002146

5.0 Energy Detail

Historical Energy Use: N

5.1 Mitigation Measures Energy

	ROG	NOx	CO	SO2	Fugitive PM10	Exhaust PM10	PM10 Total	Fugitive PM2.5	Exhaust PM2.5	PM2.5 Total	Bio- CO2	NBio- CO2	Total CO2	CH4	N2O	CO2e
Category	tons/yr										MT/yr					
Electricity Mitigated						0.0000	0.0000		0.0000	0.0000	0.0000	228.5030	228.5030	0.0105	2.1700e-003	229.3973
Electricity Unmitigated						0.0000	0.0000		0.0000	0.0000	0.0000	228.5030	228.5030	0.0105	2.1700e-003	229.3973
NaturalGas Mitigated	0.0175	0.1593	0.1338	9.6000e-004		0.0121	0.0121		0.0121	0.0121	0.0000	173.4585	173.4585	3.3200e-003	3.1800e-003	174.5141
NaturalGas Unmitigated	0.0175	0.1593	0.1338	9.6000e-004		0.0121	0.0121		0.0121	0.0121	0.0000	173.4585	173.4585	3.3200e-003	3.1800e-003	174.5141

5.2 Energy by Land Use - NaturalGas

Unmitigated

	NaturalGas Use	ROG	NOx	CO	SO2	Fugitive PM10	Exhaust PM10	PM10 Total	Fugitive PM2.5	Exhaust PM2.5	PM2.5 Total	Bio- CO2	NBio- CO2	Total CO2	CH4	N2O	CO2e
Land Use	kBTU/yr	tons/yr										MT/yr					
Enclosed Parking with Elevator	0	0.0000	0.0000	0.0000	0.0000		0.0000	0.0000		0.0000	0.0000	0.0000	0.0000	0.0000	0.0000	0.0000	0.0000
Quality Restaurant	3.25049e+006	0.0175	0.1593	0.1338	9.6000e-004		0.0121	0.0121		0.0121	0.0121	0.0000	173.4585	173.4585	3.3200e-003	3.1800e-003	174.5141
Total		**0.0175**	**0.1593**	**0.1338**	**9.6000e-004**		**0.0121**	**0.0121**		**0.0121**	**0.0121**	**0.0000**	**173.4585**	**173.4585**	**3.3200e-003**	**3.1800e-003**	**174.5141**

5.2 Energy by Land Use - NaturalGas

Mitigated

	NaturalGas Use	ROG	NOx	CO	SO2	Fugitive PM10	Exhaust PM10	PM10 Total	Fugitive PM2.5	Exhaust PM2.5	PM2.5 Total	Bio- CO2	NBio- CO2	Total CO2	CH4	N2O	CO2e
Land Use	kBTU/yr	tons/yr										MT/yr					
Quality Restaurant	3.25049e+006	0.0175	0.1593	0.1338	9.6000e-004		0.0121	0.0121		0.0121	0.0121	0.0000	173.4585	173.4585	3.3200e-003	3.1800e-003	174.5141
Enclosed Parking with Elevator	0	0.0000	0.0000	0.0000	0.0000		0.0000	0.0000		0.0000	0.0000	0.0000	0.0000	0.0000	0.0000	0.0000	0.0000
Total		**0.0175**	**0.1593**	**0.1338**	**9.6000e-004**		**0.0121**	**0.0121**		**0.0121**	**0.0121**	**0.0000**	**173.4585**	**173.4585**	**3.3200e-003**	**3.1800e-003**	**174.5141**

5.3 Energy by Land Use - Electricity

Unmitigated

	Electricity Use	Total CO2	CH4	N2O	CO2e
Land Use	kWh/yr	MT/yr			
Enclosed Parking with Elevator	144101	41.2370	1.9000e-003	3.9000e-004	41.3984
Quality Restaurant	654395	187.2660	8.6100e-003	1.7800e-003	187.9989
Total		**228.5030**	**0.0105**	**2.1700e-003**	**229.3973**

5.3 Energy by Land Use - Electricity

Mitigated

	Electricity Use	Total CO2	CH4	N2O	CO2e
Land Use	kWh/yr	MT/yr			
Enclosed Parking with Elevator	144101	41.2370	1.9000e-003	3.9000e-004	41.3984
Quality Restaurant	654395	187.2660	8.6100e-003	1.7800e-003	187.9989
Total		**228.5030**	**0.0105**	**2.1700e-003**	**229.3973**

6.0 Area Detail

6.1 Mitigation Measures Area

	ROG	NOx	CO	SO2	Fugitive PM10	Exhaust PM10	PM10 Total	Fugitive PM2.5	Exhaust PM2.5	PM2.5 Total	Bio- CO2	NBio- CO2	Total CO2	CH4	N2O	CO2e
Category	tons/yr										MT/yr					
Mitigated	0.1605	0.0000	4.6000e-004	0.0000		0.0000	0.0000		0.0000	0.0000	0.0000	8.8000e-004	8.8000e-004	0.0000	0.0000	9.3000e-004
Unmitigated	0.1605	0.0000	4.6000e-004	0.0000		0.0000	0.0000		0.0000	0.0000	0.0000	8.8000e-004	8.8000e-004	0.0000	0.0000	9.3000e-004

6.2 Area by SubCategory

Unmitigated

	ROG	NOx	CO	SO2	Fugitive PM10	Exhaust PM10	PM10 Total	Fugitive PM2.5	Exhaust PM2.5	PM2.5 Total	Bio- CO2	NBio- CO2	Total CO2	CH4	N2O	CO2e
SubCategory	tons/yr										MT/yr					
Architectural Coating	0.0328					0.0000	0.0000		0.0000	0.0000	0.0000	0.0000	0.0000	0.0000	0.0000	0.0000
Consumer Products	0.1277					0.0000	0.0000		0.0000	0.0000	0.0000	0.0000	0.0000	0.0000	0.0000	0.0000
Landscaping	4.0000e-005	0.0000	4.6000e-004	0.0000		0.0000	0.0000		0.0000	0.0000	0.0000	8.8000e-004	8.8000e-004	0.0000	0.0000	9.3000e-004
Total	**0.1605**	**0.0000**	**4.6000e-004**	**0.0000**		**0.0000**	**0.0000**		**0.0000**	**0.0000**	**0.0000**	**8.8000e-004**	**8.8000e-004**	**0.0000**	**0.0000**	**9.3000e-004**

Mitigated

	ROG	NOx	CO	SO2	Fugitive PM10	Exhaust PM10	PM10 Total	Fugitive PM2.5	Exhaust PM2.5	PM2.5 Total	Bio- CO2	NBio- CO2	Total CO2	CH4	N2O	CO2e
SubCategory	tons/yr										MT/yr					
Architectural Coating	0.0328					0.0000	0.0000		0.0000	0.0000	0.0000	0.0000	0.0000	0.0000	0.0000	0.0000
Consumer Products	0.1277					0.0000	0.0000		0.0000	0.0000	0.0000	0.0000	0.0000	0.0000	0.0000	0.0000
Landscaping	4.0000e-005	0.0000	4.6000e-004	0.0000		0.0000	0.0000		0.0000	0.0000	0.0000	8.8000e-004	8.8000e-004	0.0000	0.0000	9.3000e-004
Total	**0.1605**	**0.0000**	**4.6000e-004**	**0.0000**		**0.0000**	**0.0000**		**0.0000**	**0.0000**	**0.0000**	**8.8000e-004**	**8.8000e-004**	**0.0000**	**0.0000**	**9.3000e-004**

7.0 Water Detail

7.1 Mitigation Measures Water

	Total CO2	CH4	N2O	CO2e
Category	MT/yr			
Mitigated	17.9804	0.1387	3.4100e-003	21.9508
Unmitigated	17.9804	0.1387	3.4200e-003	21.9529

7.2 Water by Land Use

Unmitigated

	Indoor/Outdoor Use	Total CO2	CH4	N2O	CO2e
Land Use	Mgal	MT/yr			
Enclosed Parking with Elevator	0 / 0	0.0000	0.0000	0.0000	0.0000
Quality Restaurant	4.2343 / 0.270274	17.9804	0.1387	3.4200e-003	21.9529
Total		**17.9804**	**0.1387**	**3.4200e-003**	**21.9529**

7.2 Water by Land Use

Mitigated

	Indoor/Outdoor Use	Total CO2	CH4	N2O	CO2e
Land Use	Mgal	MT/yr			
Enclosed Parking with Elevator	0 / 0	0.0000	0.0000	0.0000	0.0000
Quality Restaurant	4.2343 / 0.270274	17.9804	0.1387	3.4100e-003	21.9508
Total		**17.9804**	**0.1387**	**3.4100e-003**	**21.9508**

8.0 Waste Detail

8.1 Mitigation Measures Waste

Institute Recycling and Composting Services

Category/Year

	Total CO2	CH4	N2O	CO2e
	MT/yr			
Mitigated	0.5685	0.0336	0.0000	1.2740
Unmitigated	2.5841	0.1527	0.0000	5.7911

8.2 Waste by Land Use

Unmitigated

	Waste Disposed	Total CO2	CH4	N2O	CO2e
Land Use	tons	MT/yr			
Enclosed Parking with Elevator	0	0.0000	0.0000	0.0000	0.0000
Quality Restaurant	12.73	2.5841	0.1527	0.0000	5.7911
Total		**2.5841**	**0.1527**	**0.0000**	**5.7911**

Mitigated

	Waste Disposed	Total CO2	CH4	N2O	CO2e
Land Use	tons	MT/yr			
Enclosed Parking with Elevator	0	0.0000	0.0000	0.0000	0.0000
Quality Restaurant	2.8006	0.5685	0.0336	0.0000	1.2740
Total		**0.5685**	**0.0336**	**0.0000**	**1.2740**

9.0 Operational Offroad

Equipment Type	Number	Hours/Day	Days/Year	Horse Power	Load Factor	Fuel Type

10.0 Vegetation

250-260 N. Canon Drive

South Coast AQMD Air District, Summer

1.0 Project Characteristics

1.1 Land Usage

Land Uses	Size	Metric	Lot Acreage	Floor Surface Area	Population
Enclosed Parking with Elevator	21.38	1000sqft	0.00	21,380.00	0
Quality Restaurant	13.95	1000sqft	0.16	13,950.00	0

1.2 Other Project Characteristics

Urbanization	Urban	**Wind Speed (m/s)**	2.2	**Precipitation Freq (Days)**	31
Climate Zone	9			**Operational Year**	2019
Utility Company	Southern California Edison				
CO2 Intensity (lb/MWhr)	630.89	**CH4 Intensity (lb/MWhr)**	0.029	**N2O Intensity (lb/MWhr)**	0.006

1.3 User Entered Comments & Non-Default Data

Project Characteristics -

Land Use - from Project Plans

Construction Phase - Based on 18-20 month construction schedule

Grading - Estimates from BH

Architectural Coating - SCAQMD Rule 1113

Vehicle Trips - Based on traffic study

Area Coating - SCAQMD Rule 1113

Construction Off-road Equipment Mitigation - SCAQMD Rule 403

Area Mitigation - SCAQMD Rule 1113

Waste Mitigation - 78% waste diversion is standard in BH

Table Name	Column Name	Default Value	New Value
tblArchitecturalCoating	EF_Nonresidential_Exterior	250.00	50.00
tblArchitecturalCoating	EF_Nonresidential_Interior	250.00	50.00
tblArchitecturalCoating	EF_Residential_Exterior	100.00	50.00
tblAreaCoating	Area_EF_Nonresidential_Exterior	250	50
tblAreaMitigation	UseLowVOCPaintNonresidentialInteriorValue	250	50
tblAreaMitigation	UseLowVOCPaintResidentialExteriorValue	100	50
tblConstructionPhase	NumDays	5.00	65.00
tblConstructionPhase	NumDays	100.00	282.00
tblConstructionPhase	NumDays	10.00	21.00
tblConstructionPhase	NumDays	2.00	41.00
tblConstructionPhase	NumDays	5.00	35.00
tblConstructionPhase	NumDays	1.00	11.00
tblConstructionPhase	PhaseEndDate	8/10/2018	7/1/2018
tblConstructionPhase	PhaseEndDate	8/17/2018	6/30/2018
tblConstructionPhase	PhaseStartDate	5/12/2018	4/1/2018
tblConstructionPhase	PhaseStartDate	7/2/2018	5/12/2018
tblGrading	AcresOfGrading	5.50	0.16
tblGrading	MaterialExported	0.00	15,278.00
tblLandUse	LotAcreage	0.49	0.00
tblLandUse	LotAcreage	0.32	0.16
tblProjectCharacteristics	OperationalYear	2014	2019
tblTripsAndVMT	HaulingTripNumber	1,910.00	0.00
tblVehicleTrips	ST_TR	94.36	50.60
tblVehicleTrips	SU_TR	72.16	50.60
tblVehicleTrips	WD_TR	89.95	50.60

2.0 Emissions Summary

2.1 Overall Construction (Maximum Daily Emission)

Unmitigated Construction

	ROG	NOx	CO	SO2	Fugitive PM10	Exhaust PM10	PM10 Total	Fugitive PM2.5	Exhaust PM2.5	PM2.5 Total	Bio- CO2	NBio- CO2	Total CO2	CH4	N2O	CO2e
Year	lb/day										lb/day					
2017	1.6351	13.2161	9.4834	0.0148	0.9067	0.8643	1.6342	0.4498	0.7952	1.1436	0.0000	1,459.8195	1,459.8195	0.3646	0.0000	1,467.4767
2018	4.2843	13.4733	11.0748	0.0181	0.2387	0.8648	1.1035	0.0640	0.8077	0.8717	0.0000	1,746.4826	1,746.4826	0.3920	0.0000	1,754.7150
Total	**5.9194**	**26.6894**	**20.5582**	**0.0329**	**1.1454**	**1.7291**	**2.7377**	**0.5138**	**1.6028**	**2.0153**	**0.0000**	**3,206.3021**	**3,206.3021**	**0.7567**	**0.0000**	**3,222.1917**

Mitigated Construction

	ROG	NOx	CO	SO2	Fugitive PM10	Exhaust PM10	PM10 Total	Fugitive PM2.5	Exhaust PM2.5	PM2.5 Total	Bio- CO2	NBio- CO2	Total CO2	CH4	N2O	CO2e
Year	lb/day										lb/day					
2017	1.6339	13.2045	9.4760	0.0148	0.4695	0.8635	1.1963	0.2187	0.7944	0.9119	0.0000	1,458.7557	1,458.7557	0.3643	0.0000	1,466.4061
2018	4.2830	13.4614	11.0660	0.0181	0.2387	0.8640	1.1027	0.0640	0.8069	0.8710	0.0000	1,745.1782	1,745.1782	0.3917	0.0000	1,753.4034
Total	**5.9169**	**26.6658**	**20.5421**	**0.0329**	**0.7082**	**1.7275**	**2.2990**	**0.2828**	**1.6014**	**1.7829**	**0.0000**	**3,203.9340**	**3,203.9340**	**0.7560**	**0.0000**	**3,219.8094**

	ROG	NOx	CO	SO2	Fugitive PM10	Exhaust PM10	PM10 Total	Fugitive PM2.5	Exhaust PM2.5	PM2.5 Total	Bio- CO2	NBio-CO2	Total CO2	CH4	N20	CO2e
Percent Reduction	**0.0411**	**0.0881**	**0.0787**	**0.0608**	**38.1704**	**0.0908**	**16.0224**	**44.9712**	**0.0905**	**11.5341**	**0.0000**	**0.0739**	**0.0739**	**0.0899**	**0.0000**	**0.0739**

2.2 Overall Operational

Unmitigated Operational

	ROG	NOx	CO	SO2	Fugitive PM10	Exhaust PM10	PM10 Total	Fugitive PM2.5	Exhaust PM2.5	PM2.5 Total	Bio- CO2	NBio- CO2	Total CO2	CH4	N2O	CO2e
Category	lb/day										lb/day					
Area	0.8793	3.0000e-005	3.6400e-003	0.0000		1.0000e-005	1.0000e-005		1.0000e-005	1.0000e-005		7.7300e-003	7.7300e-003	2.0000e-005		8.1700e-003
Energy	0.0960	0.8731	0.7334	5.2400e-003		0.0664	0.0664		0.0664	0.0664		1,047.7001	1,047.7001	0.0201	0.0192	1,054.0762
Mobile	3.4247	3.1988	13.9081	0.0330	2.1317	0.0464	2.1780	0.5696	0.0428	0.6124		2,641.9669	2,641.9669	0.0988		2,644.0409
Total	**4.4001**	**4.0719**	**14.6451**	**0.0383**	**2.1317**	**0.1127**	**2.2444**	**0.5696**	**0.1091**	**0.6787**		**3,689.6747**	**3,689.6747**	**0.1189**	**0.0192**	**3,698.1253**

Mitigated Operational

	ROG	NOx	CO	SO2	Fugitive PM10	Exhaust PM10	PM10 Total	Fugitive PM2.5	Exhaust PM2.5	PM2.5 Total	Bio- CO2	NBio- CO2	Total CO2	CH4	N2O	CO2e
Category	lb/day										lb/day					
Area	0.8793	3.0000e-005	3.6400e-003	0.0000		1.0000e-005	1.0000e-005		1.0000e-005	1.0000e-005		7.7300e-003	7.7300e-003	2.0000e-005		8.1700e-003
Energy	0.0960	0.8731	0.7334	5.2400e-003		0.0664	0.0664		0.0664	0.0664		1,047.7001	1,047.7001	0.0201	0.0192	1,054.0762
Mobile	3.4247	3.1988	13.9081	0.0330	2.1317	0.0464	2.1780	0.5696	0.0428	0.6124		2,641.9669	2,641.9669	0.0988		2,644.0409
Total	**4.4001**	**4.0719**	**14.6451**	**0.0383**	**2.1317**	**0.1127**	**2.2444**	**0.5696**	**0.1091**	**0.6787**		**3,689.6747**	**3,689.6747**	**0.1189**	**0.0192**	**3,698.1253**

	ROG	NOx	CO	SO2	Fugitive PM10	Exhaust PM10	PM10 Total	Fugitive PM2.5	Exhaust PM2.5	PM2.5 Total	Bio- CO2	NBio-CO2	Total CO2	CH4	N20	CO2e
Percent Reduction	0.0000	0.0000	0.0000	0.0000	0.0000	0.0000	0.0000	0.0000	0.0000	0.0000	0.0000	0.0000	0.0000	0.0000	0.0000	0.0000

3.0 Construction Detail

Construction Phase

Phase Number	Phase Name	Phase Type	Start Date	End Date	Num Days Week	Num Days	Phase Description
1	Demolition	Demolition	1/1/2017	1/30/2017	5	21	
2	Site Preparation	Site Preparation	1/31/2017	2/14/2017	5	11	
3	Grading	Grading	2/15/2017	4/12/2017	5	41	
4	Building Construction	Building Construction	4/13/2017	5/11/2018	5	282	
5	Architectural Coating	Architectural Coating	4/1/2018	7/1/2018	5	65	
6	Paving	Paving	5/12/2018	6/30/2018	5	35	

OffRoad Equipment

Phase Name	Offroad Equipment Type	Amount	Usage Hours	Horse Power	Load Factor
Architectural Coating	Air Compressors	1	6.00	78	0.48
Paving	Cement and Mortar Mixers	4	6.00	9	0.56
Demolition	Concrete/Industrial Saws	1	8.00	81	0.73
Grading	Concrete/Industrial Saws	1	8.00	81	0.73
Building Construction	Cranes	1	4.00	226	0.29
Building Construction	Forklifts	2	6.00	89	0.20
Site Preparation	Graders	1	8.00	174	0.41
Paving	Pavers	1	7.00	125	0.42
Paving	Rollers	1	7.00	80	0.38
Demolition	Rubber Tired Dozers	1	1.00	255	0.40
Grading	Rubber Tired Dozers	1	1.00	255	0.40
Building Construction	Tractors/Loaders/Backhoes	2	8.00	97	0.37
Demolition	Tractors/Loaders/Backhoes	2	6.00	97	0.37
Grading	Tractors/Loaders/Backhoes	2	6.00	97	0.37
Paving	Tractors/Loaders/Backhoes	1	7.00	97	0.37
Site Preparation	Tractors/Loaders/Backhoes	1	8.00	97	0.37

Trips and VMT

Phase Name	Offroad Equipment Count	Worker Trip Number	Vendor Trip Number	Hauling Trip Number	Worker Trip Length	Vendor Trip Length	Hauling Trip Length	Worker Vehicle Class	Vendor Vehicle Class	Hauling Vehicle Class
Demolition	4	10.00	0.00	0.00	14.70	6.90	20.00	LD_Mix	HDT_Mix	HHDT
Site Preparation	2	5.00	0.00	0.00	14.70	6.90	20.00	LD_Mix	HDT_Mix	HHDT
Grading	4	10.00	0.00	0.00	14.70	6.90	20.00	LD_Mix	HDT_Mix	HHDT
Building Construction	5	15.00	6.00	0.00	14.70	6.90	20.00	LD_Mix	HDT_Mix	HHDT
Paving	7	18.00	0.00	0.00	14.70	6.90	20.00	LD_Mix	HDT_Mix	HHDT
Architectural Coating	1	3.00	0.00	0.00	14.70	6.90	20.00	LD_Mix	HDT_Mix	HHDT

3.1 Mitigation Measures Construction

Water Exposed Area

Clean Paved Roads

3.2 Demolition - 2017

Unmitigated Construction On-Site

Acres of Grading: 0.16

	ROG	NOx	CO	SO2	Fugitive PM10	Exhaust PM10	PM10 Total	Fugitive PM2.5	Exhaust PM2.5	PM2.5 Total	Bio- CO2	NBio- CO2	Total CO2	CH4	N2O	CO2e
Category	lb/day										lb/day					
Off-Road	1.2049	10.4761	8.5825	0.0120		0.7266	0.7266		0.6930	0.6930		1,183.8131	1,183.8131	0.2333		1,188.7118
Total	**1.2049**	**10.4761**	**8.5825**	**0.0120**		**0.7266**	**0.7266**		**0.6930**	**0.6930**		**1,183.8131**	**1,183.8131**	**0.2333**		**1,188.7118**

3.2 Demolition - 2017

Unmitigated Construction Off-Site

Acres of Grading: 0.16

	ROG	NOx	CO	SO2	Fugitive PM10	Exhaust PM10	PM10 Total	Fugitive PM2.5	Exhaust PM2.5	PM2.5 Total	Bio- CO2	NBio- CO2	Total CO2	CH4	N2O	CO2e
Category	lb/day										lb/day					
Hauling	0.0000	0.0000	0.0000	0.0000	0.0000	0.0000	0.0000	0.0000	0.0000	0.0000		0.0000	0.0000	0.0000		0.0000
Vendor	0.0000	0.0000	0.0000	0.0000	0.0000	0.0000	0.0000	0.0000	0.0000	0.0000		0.0000	0.0000	0.0000		0.0000
Worker	0.1871	0.0472	0.5880	1.4200e-003	0.1118	9.0000e-004	0.1127	0.0296	8.3000e-004	0.0305		114.3934	114.3934	5.6300e-003		114.5116
Total	**0.1871**	**0.0472**	**0.5880**	**1.4200e-003**	**0.1118**	**9.0000e-004**	**0.1127**	**0.0296**	**8.3000e-004**	**0.0305**		**114.3934**	**114.3934**	**5.6300e-003**		**114.5116**

Mitigated Construction On-Site

	ROG	NOx	CO	SO2	Fugitive PM10	Exhaust PM10	PM10 Total	Fugitive PM2.5	Exhaust PM2.5	PM2.5 Total	Bio- CO2	NBio- CO2	Total CO2	CH4	N2O	CO2e
Category	lb/day										lb/day					
Off-Road	1.2038	10.4665	8.5746	0.0120		0.7259	0.7259		0.6924	0.6924	0.0000	1,182.7271	1,182.7271	0.2331		1,187.6213
Total	**1.2038**	**10.4665**	**8.5746**	**0.0120**		**0.7259**	**0.7259**		**0.6924**	**0.6924**	**0.0000**	**1,182.7271**	**1,182.7271**	**0.2331**		**1,187.6213**

3.2 Demolition - 2017

Mitigated Construction Off-Site

Acres of Grading: 0.16

	ROG	NOx	CO	SO2	Fugitive PM10	Exhaust PM10	PM10 Total	Fugitive PM2.5	Exhaust PM2.5	PM2.5 Total	Bio- CO2	NBio- CO2	Total CO2	CH4	N2O	CO2e
Category	lb/day										lb/day					
Hauling	0.0000	0.0000	0.0000	0.0000	0.0000	0.0000	0.0000	0.0000	0.0000	0.0000		0.0000	0.0000	0.0000		0.0000
Vendor	0.0000	0.0000	0.0000	0.0000	0.0000	0.0000	0.0000	0.0000	0.0000	0.0000		0.0000	0.0000	0.0000		0.0000
Worker	0.1871	0.0472	0.5880	1.4200e-003	0.1118	9.0000e-004	0.1127	0.0296	8.3000e-004	0.0305		114.3934	114.3934	5.6300e-003		114.5116
Total	**0.1871**	**0.0472**	**0.5880**	**1.4200e-003**	**0.1118**	**9.0000e-004**	**0.1127**	**0.0296**	**8.3000e-004**	**0.0305**		**114.3934**	**114.3934**	**5.6300e-003**		**114.5116**

3.3 Site Preparation - 2017

Unmitigated Construction On-Site

Acres of Grading: 0

	ROG	NOx	CO	SO2	Fugitive PM10	Exhaust PM10	PM10 Total	Fugitive PM2.5	Exhaust PM2.5	PM2.5 Total	Bio- CO2	NBio- CO2	Total CO2	CH4	N2O	CO2e
Category	lb/day										lb/day					
Fugitive Dust					0.0154	0.0000	0.0154	1.6700e-003	0.0000	1.6700e-003			0.0000			0.0000
Off-Road	1.2694	12.6852	7.2319	9.3300e-003		0.7705	0.7705		0.7089	0.7089		955.8663	955.8663	0.2929		962.0167
Total	**1.2694**	**12.6852**	**7.2319**	**9.3300e-003**	**0.0154**	**0.7705**	**0.7859**	**1.6700e-003**	**0.7089**	**0.7105**		**955.8663**	**955.8663**	**0.2929**		**962.0167**

3.3 Site Preparation - 2017

Unmitigated Construction Off-Site

Acres of Grading: 0

	ROG	NOx	CO	SO2	Fugitive PM10	Exhaust PM10	PM10 Total	Fugitive PM2.5	Exhaust PM2.5	PM2.5 Total	Bio- CO2	NBio- CO2	Total CO2	CH4	N2O	CO2e
Category	lb/day										lb/day					
Hauling	0.0000	0.0000	0.0000	0.0000	0.0000	0.0000	0.0000	0.0000	0.0000	0.0000		0.0000	0.0000	0.0000		0.0000
Vendor	0.0000	0.0000	0.0000	0.0000	0.0000	0.0000	0.0000	0.0000	0.0000	0.0000		0.0000	0.0000	0.0000		0.0000
Worker	0.0936	0.0236	0.2940	7.1000e-004	0.0559	4.5000e-004	0.0563	0.0148	4.1000e-004	0.0152		57.1967	57.1967	2.8200e-003		57.2558
Total	**0.0936**	**0.0236**	**0.2940**	**7.1000e-004**	**0.0559**	**4.5000e-004**	**0.0563**	**0.0148**	**4.1000e-004**	**0.0152**		**57.1967**	**57.1967**	**2.8200e-003**		**57.2558**

Mitigated Construction On-Site

	ROG	NOx	CO	SO2	Fugitive PM10	Exhaust PM10	PM10 Total	Fugitive PM2.5	Exhaust PM2.5	PM2.5 Total	Bio- CO2	NBio- CO2	Total CO2	CH4	N2O	CO2e
Category	lb/day										lb/day					
Fugitive Dust					6.9400e-003	0.0000	6.9400e-003	7.5000e-004	0.0000	7.5000e-004			0.0000			0.0000
Off-Road	1.2682	12.6736	7.2253	9.3200e-003		0.7698	0.7698		0.7082	0.7082	0.0000	954.9894	954.9894	0.2926		961.1341
Total	**1.2682**	**12.6736**	**7.2253**	**9.3200e-003**	**6.9400e-003**	**0.7698**	**0.7767**	**7.5000e-004**	**0.7082**	**0.7090**	**0.0000**	**954.9894**	**954.9894**	**0.2926**		**961.1341**

3.3 Site Preparation - 2017

Mitigated Construction Off-Site

Acres of Grading: 0

	ROG	NOx	CO	SO2	Fugitive PM10	Exhaust PM10	PM10 Total	Fugitive PM2.5	Exhaust PM2.5	PM2.5 Total	Bio- CO2	NBio- CO2	Total CO2	CH4	N2O	CO2e
Category	lb/day										lb/day					
Hauling	0.0000	0.0000	0.0000	0.0000	0.0000	0.0000	0.0000	0.0000	0.0000	0.0000		0.0000	0.0000	0.0000		0.0000
Vendor	0.0000	0.0000	0.0000	0.0000	0.0000	0.0000	0.0000	0.0000	0.0000	0.0000		0.0000	0.0000	0.0000		0.0000
Worker	0.0936	0.0236	0.2940	7.1000e-004	0.0559	4.5000e-004	0.0563	0.0148	4.1000e-004	0.0152		57.1967	57.1967	2.8200e-003		57.2558
Total	**0.0936**	**0.0236**	**0.2940**	**7.1000e-004**	**0.0559**	**4.5000e-004**	**0.0563**	**0.0148**	**4.1000e-004**	**0.0152**		**57.1967**	**57.1967**	**2.8200e-003**		**57.2558**

3.4 Grading - 2017

Unmitigated Construction On-Site

	ROG	NOx	CO	SO2	Fugitive PM10	Exhaust PM10	PM10 Total	Fugitive PM2.5	Exhaust PM2.5	PM2.5 Total	Bio- CO2	NBio- CO2	Total CO2	CH4	N2O	CO2e
Category	lb/day										lb/day					
Fugitive Dust					0.7949	0.0000	0.7949	0.4202	0.0000	0.4202			0.0000			0.0000
Off-Road	1.2049	10.4761	8.5825	0.0120		0.7266	0.7266		0.6930	0.6930		1,183.8131	1,183.8131	0.2333		1,188.7118
Total	**1.2049**	**10.4761**	**8.5825**	**0.0120**	**0.7949**	**0.7266**	**1.5215**	**0.4202**	**0.6930**	**1.1132**		**1,183.8131**	**1,183.8131**	**0.2333**		**1,188.7118**

3.4 Grading - 2017

Unmitigated Construction Off-Site

	ROG	NOx	CO	SO2	Fugitive PM10	Exhaust PM10	PM10 Total	Fugitive PM2.5	Exhaust PM2.5	PM2.5 Total	Bio- CO2	NBio- CO2	Total CO2	CH4	N2O	CO2e
Category	lb/day										lb/day					
Hauling	0.0000	0.0000	0.0000	0.0000	0.0000	0.0000	0.0000	0.0000	0.0000	0.0000		0.0000	0.0000	0.0000		0.0000
Vendor	0.0000	0.0000	0.0000	0.0000	0.0000	0.0000	0.0000	0.0000	0.0000	0.0000		0.0000	0.0000	0.0000		0.0000
Worker	0.1871	0.0472	0.5880	1.4200e-003	0.1118	9.0000e-004	0.1127	0.0296	8.3000e-004	0.0305		114.3934	114.3934	5.6300e-003		114.5116
Total	**0.1871**	**0.0472**	**0.5880**	**1.4200e-003**	**0.1118**	**9.0000e-004**	**0.1127**	**0.0296**	**8.3000e-004**	**0.0305**		**114.3934**	**114.3934**	**5.6300e-003**		**114.5116**

Mitigated Construction On-Site

	ROG	NOx	CO	SO2	Fugitive PM10	Exhaust PM10	PM10 Total	Fugitive PM2.5	Exhaust PM2.5	PM2.5 Total	Bio- CO2	NBio- CO2	Total CO2	CH4	N2O	CO2e
Category	lb/day										lb/day					
Fugitive Dust					0.3577	0.0000	0.3577	0.1891	0.0000	0.1891			0.0000			0.0000
Off-Road	1.2038	10.4665	8.5746	0.0120		0.7259	0.7259		0.6924	0.6924	0.0000	1,182.7271	1,182.7271	0.2331		1,187.6213
Total	**1.2038**	**10.4665**	**8.5746**	**0.0120**	**0.3577**	**0.7259**	**1.0836**	**0.1891**	**0.6924**	**0.8814**	**0.0000**	**1,182.7271**	**1,182.7271**	**0.2331**		**1,187.6213**

3.4 Grading - 2017

Mitigated Construction Off-Site

	ROG	NOx	CO	SO2	Fugitive PM10	Exhaust PM10	PM10 Total	Fugitive PM2.5	Exhaust PM2.5	PM2.5 Total	Bio- CO2	NBio- CO2	Total CO2	CH4	N2O	CO2e
Category	lb/day										lb/day					
Hauling	0.0000	0.0000	0.0000	0.0000	0.0000	0.0000	0.0000	0.0000	0.0000	0.0000		0.0000	0.0000	0.0000		0.0000
Vendor	0.0000	0.0000	0.0000	0.0000	0.0000	0.0000	0.0000	0.0000	0.0000	0.0000		0.0000	0.0000	0.0000		0.0000
Worker	0.1871	0.0472	0.5880	1.4200e-003	0.1118	9.0000e-004	0.1127	0.0296	8.3000e-004	0.0305		114.3934	114.3934	5.6300e-003		114.5116
Total	**0.1871**	**0.0472**	**0.5880**	**1.4200e-003**	**0.1118**	**9.0000e-004**	**0.1127**	**0.0296**	**8.3000e-004**	**0.0305**		**114.3934**	**114.3934**	**5.6300e-003**		**114.5116**

3.5 Building Construction - 2017

Unmitigated Construction On-Site

Acres of Paving: 0

	ROG	NOx	CO	SO2	Fugitive PM10	Exhaust PM10	PM10 Total	Fugitive PM2.5	Exhaust PM2.5	PM2.5 Total	Bio- CO2	NBio- CO2	Total CO2	CH4	N2O	CO2e
Category	lb/day										lb/day					
Off-Road	1.2740	12.6738	8.0395	0.0113		0.8553	0.8553		0.7869	0.7869		1,159.5310	1,159.5310	0.3553		1,166.9919
Total	**1.2740**	**12.6738**	**8.0395**	**0.0113**		**0.8553**	**0.8553**		**0.7869**	**0.7869**		**1,159.5310**	**1,159.5310**	**0.3553**		**1,166.9919**

3.5 Building Construction - 2017

Unmitigated Construction Off-Site

Acres of Paving: 0

	ROG	NOx	CO	SO2	Fugitive PM10	Exhaust PM10	PM10 Total	Fugitive PM2.5	Exhaust PM2.5	PM2.5 Total	Bio- CO2	NBio- CO2	Total CO2	CH4	N2O	CO2e
Category	lb/day										lb/day					
Hauling	0.0000	0.0000	0.0000	0.0000	0.0000	0.0000	0.0000	0.0000	0.0000	0.0000		0.0000	0.0000	0.0000		0.0000
Vendor	0.0805	0.4715	0.5619	1.3000e-003	0.0375	7.6100e-003	0.0451	0.0107	7.0000e-003	0.0177		128.6985	128.6985	9.0000e-004		128.7174
Worker	0.2807	0.0707	0.8819	2.1200e-003	0.1677	1.3500e-003	0.1690	0.0445	1.2400e-003	0.0457		171.5900	171.5900	8.4500e-003		171.7674
Total	**0.3611**	**0.5423**	**1.4439**	**3.4200e-003**	**0.2052**	**8.9600e-003**	**0.2141**	**0.0552**	**8.2400e-003**	**0.0634**		**300.2885**	**300.2885**	**9.3500e-003**		**300.4848**

Mitigated Construction On-Site

	ROG	NOx	CO	SO2	Fugitive PM10	Exhaust PM10	PM10 Total	Fugitive PM2.5	Exhaust PM2.5	PM2.5 Total	Bio- CO2	NBio- CO2	Total CO2	CH4	N2O	CO2e
Category	lb/day										lb/day					
Off-Road	1.2728	12.6622	8.0321	0.0113		0.8546	0.8546		0.7862	0.7862	0.0000	1,158.4672	1,158.4672	0.3550		1,165.9212
Total	**1.2728**	**12.6622**	**8.0321**	**0.0113**		**0.8546**	**0.8546**		**0.7862**	**0.7862**	**0.0000**	**1,158.4672**	**1,158.4672**	**0.3550**		**1,165.9212**

3.5 Building Construction - 2017

Mitigated Construction Off-Site

Acres of Paving: 0

	ROG	NOx	CO	SO2	Fugitive PM10	Exhaust PM10	PM10 Total	Fugitive PM2.5	Exhaust PM2.5	PM2.5 Total	Bio- CO2	NBio- CO2	Total CO2	CH4	N2O	CO2e
Category	lb/day										lb/day					
Hauling	0.0000	0.0000	0.0000	0.0000	0.0000	0.0000	0.0000	0.0000	0.0000	0.0000		0.0000	0.0000	0.0000		0.0000
Vendor	0.0805	0.4715	0.5619	1.3000e-003	0.0375	7.6100e-003	0.0451	0.0107	7.0000e-003	0.0177		128.6985	128.6985	9.0000e-004		128.7174
Worker	0.2807	0.0707	0.8819	2.1200e-003	0.1677	1.3500e-003	0.1690	0.0445	1.2400e-003	0.0457		171.5900	171.5900	8.4500e-003		171.7674
Total	**0.3611**	**0.5423**	**1.4439**	**3.4200e-003**	**0.2052**	**8.9600e-003**	**0.2141**	**0.0552**	**8.2400e-003**	**0.0634**		**300.2885**	**300.2885**	**9.3500e-003**		**300.4848**

3.5 Building Construction - 2018

Unmitigated Construction On-Site

	ROG	NOx	CO	SO2	Fugitive PM10	Exhaust PM10	PM10 Total	Fugitive PM2.5	Exhaust PM2.5	PM2.5 Total	Bio- CO2	NBio- CO2	Total CO2	CH4	N2O	CO2e
Category	lb/day										lb/day					
Off-Road	1.0786	10.9578	7.7239	0.0113		0.7055	0.7055		0.6491	0.6491		1,140.2487	1,140.2487	0.3550		1,147.7032
Total	**1.0786**	**10.9578**	**7.7239**	**0.0113**		**0.7055**	**0.7055**		**0.6491**	**0.6491**		**1,140.2487**	**1,140.2487**	**0.3550**		**1,147.7032**

3.5 Building Construction - 2018

Unmitigated Construction Off-Site

Acres of Paving: 0

	ROG	NOx	CO	SO2	Fugitive PM10	Exhaust PM10	PM10 Total	Fugitive PM2.5	Exhaust PM2.5	PM2.5 Total	Bio- CO2	NBio- CO2	Total CO2	CH4	N2O	CO2e
Category	lb/day										lb/day					
Hauling	0.0000	0.0000	0.0000	0.0000	0.0000	0.0000	0.0000	0.0000	0.0000	0.0000		0.0000	0.0000	0.0000		0.0000
Vendor	0.0738	0.4328	0.5354	1.3000e-003	0.0375	7.1700e-003	0.0447	0.0107	6.6000e-003	0.0173		126.5389	126.5389	9.0000e-004		126.5577
Worker	0.2616	0.0642	0.8011	2.1200e-003	0.1677	1.3100e-003	0.1690	0.0445	1.2100e-003	0.0457		165.2054	165.2054	7.8400e-003		165.3700
Total	**0.3354**	**0.4969**	**1.3365**	**3.4200e-003**	**0.2052**	**8.4800e-003**	**0.2137**	**0.0552**	**7.8100e-003**	**0.0630**		**291.7442**	**291.7442**	**8.7400e-003**		**291.9277**

Mitigated Construction On-Site

	ROG	NOx	CO	SO2	Fugitive PM10	Exhaust PM10	PM10 Total	Fugitive PM2.5	Exhaust PM2.5	PM2.5 Total	Bio- CO2	NBio- CO2	Total CO2	CH4	N2O	CO2e
Category	lb/day										lb/day					
Off-Road	1.0776	10.9477	7.7168	0.0113		0.7048	0.7048		0.6485	0.6485	0.0000	1,139.2026	1,139.2026	0.3547		1,146.6502
Total	**1.0776**	**10.9477**	**7.7168**	**0.0113**		**0.7048**	**0.7048**		**0.6485**	**0.6485**	**0.0000**	**1,139.2026**	**1,139.2026**	**0.3547**		**1,146.6502**

3.5 Building Construction - 2018

Mitigated Construction Off-Site

Acres of Paving: 0

	ROG	NOx	CO	SO2	Fugitive PM10	Exhaust PM10	PM10 Total	Fugitive PM2.5	Exhaust PM2.5	PM2.5 Total	Bio- CO2	NBio- CO2	Total CO2	CH4	N2O	CO2e
Category	lb/day										lb/day					
Hauling	0.0000	0.0000	0.0000	0.0000	0.0000	0.0000	0.0000	0.0000	0.0000	0.0000		0.0000	0.0000	0.0000		0.0000
Vendor	0.0738	0.4328	0.5354	1.3000e-003	0.0375	7.1700e-003	0.0447	0.0107	6.6000e-003	0.0173		126.5389	126.5389	9.0000e-004		126.5577
Worker	0.2616	0.0642	0.8011	2.1200e-003	0.1677	1.3100e-003	0.1690	0.0445	1.2100e-003	0.0457		165.2054	165.2054	7.8400e-003		165.3700
Total	**0.3354**	**0.4969**	**1.3365**	**3.4200e-003**	**0.2052**	**8.4800e-003**	**0.2137**	**0.0552**	**7.8100e-003**	**0.0630**		**291.7442**	**291.7442**	**8.7400e-003**		**291.9277**

3.6 Architectural Coating - 2018

Unmitigated Construction On-Site

	ROG	NOx	CO	SO2	Fugitive PM10	Exhaust PM10	PM10 Total	Fugitive PM2.5	Exhaust PM2.5	PM2.5 Total	Bio- CO2	NBio- CO2	Total CO2	CH4	N2O	CO2e
Category	lb/day										lb/day					
Archit. Coating	2.5193					0.0000	0.0000		0.0000	0.0000			0.0000			0.0000
Off-Road	0.2986	2.0058	1.8542	2.9700e-003		0.1506	0.1506		0.1506	0.1506		281.4485	281.4485	0.0267		282.0102
Total	**2.8179**	**2.0058**	**1.8542**	**2.9700e-003**		**0.1506**	**0.1506**		**0.1506**	**0.1506**		**281.4485**	**281.4485**	**0.0267**		**282.0102**

3.6 Architectural Coating - 2018

Unmitigated Construction Off-Site

	ROG	NOx	CO	SO2	Fugitive PM10	Exhaust PM10	PM10 Total	Fugitive PM2.5	Exhaust PM2.5	PM2.5 Total	Bio- CO2	NBio- CO2	Total CO2	CH4	N2O	CO2e
Category	lb/day										lb/day					
Hauling	0.0000	0.0000	0.0000	0.0000	0.0000	0.0000	0.0000	0.0000	0.0000	0.0000		0.0000	0.0000	0.0000		0.0000
Vendor	0.0000	0.0000	0.0000	0.0000	0.0000	0.0000	0.0000	0.0000	0.0000	0.0000		0.0000	0.0000	0.0000		0.0000
Worker	0.0523	0.0128	0.1602	4.2000e-004	0.0335	2.6000e-004	0.0338	8.8900e-003	2.4000e-004	9.1400e-003		33.0411	33.0411	1.5700e-003		33.0740
Total	**0.0523**	**0.0128**	**0.1602**	**4.2000e-004**	**0.0335**	**2.6000e-004**	**0.0338**	**8.8900e-003**	**2.4000e-004**	**9.1400e-003**		**33.0411**	**33.0411**	**1.5700e-003**		**33.0740**

Mitigated Construction On-Site

	ROG	NOx	CO	SO2	Fugitive PM10	Exhaust PM10	PM10 Total	Fugitive PM2.5	Exhaust PM2.5	PM2.5 Total	Bio- CO2	NBio- CO2	Total CO2	CH4	N2O	CO2e
Category	lb/day										lb/day					
Archit. Coating	2.5193					0.0000	0.0000		0.0000	0.0000			0.0000			0.0000
Off-Road	0.2984	2.0039	1.8525	2.9700e-003		0.1504	0.1504		0.1504	0.1504	0.0000	281.1903	281.1903	0.0267		281.7514
Total	**2.8177**	**2.0039**	**1.8525**	**2.9700e-003**		**0.1504**	**0.1504**		**0.1504**	**0.1504**	**0.0000**	**281.1903**	**281.1903**	**0.0267**		**281.7514**

3.6 Architectural Coating - 2018

Mitigated Construction Off-Site

	ROG	NOx	CO	SO2	Fugitive PM10	Exhaust PM10	PM10 Total	Fugitive PM2.5	Exhaust PM2.5	PM2.5 Total	Bio- CO2	NBio- CO2	Total CO2	CH4	N2O	CO2e
Category	lb/day										lb/day					
Hauling	0.0000	0.0000	0.0000	0.0000	0.0000	0.0000	0.0000	0.0000	0.0000	0.0000		0.0000	0.0000	0.0000		0.0000
Vendor	0.0000	0.0000	0.0000	0.0000	0.0000	0.0000	0.0000	0.0000	0.0000	0.0000		0.0000	0.0000	0.0000		0.0000
Worker	0.0523	0.0128	0.1602	4.2000e-004	0.0335	2.6000e-004	0.0338	8.8900e-003	2.4000e-004	9.1400e-003		33.0411	33.0411	1.5700e-003		33.0740
Total	**0.0523**	**0.0128**	**0.1602**	**4.2000e-004**	**0.0335**	**2.6000e-004**	**0.0338**	**8.8900e-003**	**2.4000e-004**	**9.1400e-003**		**33.0411**	**33.0411**	**1.5700e-003**		**33.0740**

3.7 Paving - 2018

Unmitigated Construction On-Site

Residential Indoor: 0; Residential Outdoor: 0; Non-Residential Indoor: 52,995; Non-Residential Outdoor: 17,665

	ROG	NOx	CO	SO2	Fugitive PM10	Exhaust PM10	PM10 Total	Fugitive PM2.5	Exhaust PM2.5	PM2.5 Total	Bio- CO2	NBio- CO2	Total CO2	CH4	N2O	CO2e
Category	lb/day										lb/day					
Off-Road	0.9092	8.6233	7.1255	0.0111		0.5050	0.5050		0.4681	0.4681		1,054.2145	1,054.2145	0.2968		1,060.4462
Paving	0.0000					0.0000	0.0000		0.0000	0.0000			0.0000			0.0000
Total	**0.9092**	**8.6233**	**7.1255**	**0.0111**		**0.5050**	**0.5050**		**0.4681**	**0.4681**		**1,054.2145**	**1,054.2145**	**0.2968**		**1,060.4462**

3.7 Paving - 2018

Unmitigated Construction Off-Site

Residential Indoor: 0; Residential Outdoor: 0; Non-Residential Indoor: 52,995; Non-Residential Outdoor: 17,665

	ROG	NOx	CO	SO2	Fugitive PM10	Exhaust PM10	PM10 Total	Fugitive PM2.5	Exhaust PM2.5	PM2.5 Total	Bio- CO2	NBio- CO2	Total CO2	CH4	N2O	CO2e
Category	lb/day										lb/day					
Hauling	0.0000	0.0000	0.0000	0.0000	0.0000	0.0000	0.0000	0.0000	0.0000	0.0000		0.0000	0.0000	0.0000		0.0000
Vendor	0.0000	0.0000	0.0000	0.0000	0.0000	0.0000	0.0000	0.0000	0.0000	0.0000		0.0000	0.0000	0.0000		0.0000
Worker	0.3139	0.0770	0.9614	2.5500e-003	0.2012	1.5700e-003	0.2028	0.0534	1.4600e-003	0.0548		198.2465	198.2465	9.4100e-003		198.4440
Total	**0.3139**	**0.0770**	**0.9614**	**2.5500e-003**	**0.2012**	**1.5700e-003**	**0.2028**	**0.0534**	**1.4600e-003**	**0.0548**		**198.2465**	**198.2465**	**9.4100e-003**		**198.4440**

Mitigated Construction On-Site

	ROG	NOx	CO	SO2	Fugitive PM10	Exhaust PM10	PM10 Total	Fugitive PM2.5	Exhaust PM2.5	PM2.5 Total	Bio- CO2	NBio- CO2	Total CO2	CH4	N2O	CO2e
Category	lb/day										lb/day					
Off-Road	0.9084	8.6154	7.1190	0.0111		0.5045	0.5045		0.4676	0.4676	0.0000	1,053.2473	1,053.2473	0.2965		1,059.4733
Paving	0.0000					0.0000	0.0000		0.0000	0.0000			0.0000			0.0000
Total	**0.9084**	**8.6154**	**7.1190**	**0.0111**		**0.5045**	**0.5045**		**0.4676**	**0.4676**	**0.0000**	**1,053.2473**	**1,053.2473**	**0.2965**		**1,059.4733**

3.7 Paving - 2018

Mitigated Construction Off-Site

Residential Indoor: 0; Residential Outdoor: 0; Non-Residential Indoor: 52,995; Non-Residential Outdoor: 17,665

	ROG	NOx	CO	SO2	Fugitive PM10	Exhaust PM10	PM10 Total	Fugitive PM2.5	Exhaust PM2.5	PM2.5 Total	Bio- CO2	NBio- CO2	Total CO2	CH4	N2O	CO2e
Category	lb/day										lb/day					
Hauling	0.0000	0.0000	0.0000	0.0000	0.0000	0.0000	0.0000	0.0000	0.0000	0.0000		0.0000	0.0000	0.0000		0.0000
Vendor	0.0000	0.0000	0.0000	0.0000	0.0000	0.0000	0.0000	0.0000	0.0000	0.0000		0.0000	0.0000	0.0000		0.0000
Worker	0.3139	0.0770	0.9614	2.5500e-003	0.2012	1.5700e-003	0.2028	0.0534	1.4600e-003	0.0548		198.2465	198.2465	9.4100e-003		198.4440
Total	**0.3139**	**0.0770**	**0.9614**	**2.5500e-003**	**0.2012**	**1.5700e-003**	**0.2028**	**0.0534**	**1.4600e-003**	**0.0548**		**198.2465**	**198.2465**	**9.4100e-003**		**198.4440**

4.0 Operational Detail - Mobile

4.1 Mitigation Measures Mobile

	ROG	NOx	CO	SO2	Fugitive PM10	Exhaust PM10	PM10 Total	Fugitive PM2.5	Exhaust PM2.5	PM2.5 Total	Bio- CO2	NBio- CO2	Total CO2	CH4	N2O	CO2e
Category	lb/day										lb/day					
Mitigated	3.4247	3.1988	13.9081	0.0330	2.1317	0.0464	2.1780	0.5696	0.0428	0.6124		2,641.9669	2,641.9669	0.0988		2,644.0409
Unmitigated	3.4247	3.1988	13.9081	0.0330	2.1317	0.0464	2.1780	0.5696	0.0428	0.6124		2,641.9669	2,641.9669	0.0988		2,644.0409

4.2 Trip Summary Information

	Average Daily Trip Rate			Unmitigated	Mitigated
Land Use	Weekday	Saturday	Sunday	Annual VMT	Annual VMT
Enclosed Parking with Elevator	0.00	0.00	0.00		
Quality Restaurant	705.87	705.87	705.87	1,004,899	1,004,899
Total	705.87	705.87	705.87	1,004,899	1,004,899

4.3 Trip Type Information

	Miles			Trip %			Trip Purpose %		
Land Use	H-W or C-W	H-S or C-C	H-O or C-NW	H-W or C-W	H-S or C-C	H-O or C-NW	Primary	Diverted	Pass-by
Enclosed Parking with Elevator	16.60	8.40	6.90	0.00	0.00	0.00	0	0	0
Quality Restaurant	16.60	8.40	6.90	12.00	69.00	19.00	38	18	44

4.4 Fleet Mix

LDA	LDT1	LDT2	MDV	LHD1	LHD2	MHD	HHD	OBUS	UBUS	MCY	SBUS	MH
0.510142	0.059804	0.180842	0.139058	0.042603	0.006701	0.016107	0.033206	0.001939	0.002487	0.004384	0.000580	0.002146

5.0 Energy Detail

Historical Energy Use: N

5.1 Mitigation Measures Energy

	ROG	NOx	CO	SO2	Fugitive PM10	Exhaust PM10	PM10 Total	Fugitive PM2.5	Exhaust PM2.5	PM2.5 Total	Bio- CO2	NBio- CO2	Total CO2	CH4	N2O	CO2e
Category	lb/day										lb/day					
NaturalGas Mitigated	0.0960	0.8731	0.7334	5.2400e-003		0.0664	0.0664		0.0664	0.0664		1,047.7001	1,047.7001	0.0201	0.0192	1,054.0762
NaturalGas Unmitigated	0.0960	0.8731	0.7334	5.2400e-003		0.0664	0.0664		0.0664	0.0664		1,047.7001	1,047.7001	0.0201	0.0192	1,054.0762

5.2 Energy by Land Use - NaturalGas

Unmitigated

	NaturalGas Use	ROG	NOx	CO	SO2	Fugitive PM10	Exhaust PM10	PM10 Total	Fugitive PM2.5	Exhaust PM2.5	PM2.5 Total	Bio- CO2	NBio- CO2	Total CO2	CH4	N2O	CO2e
Land Use	kBTU/yr	lb/day										lb/day					
Enclosed Parking with Elevator	0	0.0000	0.0000	0.0000	0.0000		0.0000	0.0000		0.0000	0.0000		0.0000	0.0000	0.0000	0.0000	0.0000
Quality Restaurant	8905.45	0.0960	0.8731	0.7334	5.2400e-003		0.0664	0.0664		0.0664	0.0664		1,047.7001	1,047.7001	0.0201	0.0192	1,054.0762
Total		**0.0960**	**0.8731**	**0.7334**	**5.2400e-003**		**0.0664**	**0.0664**		**0.0664**	**0.0664**		**1,047.7001**	**1,047.7001**	**0.0201**	**0.0192**	**1,054.0762**

Mitigated

	NaturalGas Use	ROG	NOx	CO	SO2	Fugitive PM10	Exhaust PM10	PM10 Total	Fugitive PM2.5	Exhaust PM2.5	PM2.5 Total	Bio- CO2	NBio- CO2	Total CO2	CH4	N2O	CO2e
Land Use	kBTU/yr	lb/day										lb/day					
Quality Restaurant	8.90545	0.0960	0.8731	0.7334	5.2400e-003		0.0664	0.0664		0.0664	0.0664		1,047.7001	1,047.7001	0.0201	0.0192	1,054.0762
Enclosed Parking with Elevator	0	0.0000	0.0000	0.0000	0.0000		0.0000	0.0000		0.0000	0.0000		0.0000	0.0000	0.0000	0.0000	0.0000
Total		**0.0960**	**0.8731**	**0.7334**	**5.2400e-003**		**0.0664**	**0.0664**		**0.0664**	**0.0664**		**1,047.7001**	**1,047.7001**	**0.0201**	**0.0192**	**1,054.0762**

6.0 Area Detail

6.1 Mitigation Measures Area

	ROG	NOx	CO	SO2	Fugitive PM10	Exhaust PM10	PM10 Total	Fugitive PM2.5	Exhaust PM2.5	PM2.5 Total	Bio- CO2	NBio- CO2	Total CO2	CH4	N2O	CO2e
Category	lb/day										lb/day					
Mitigated	0.8793	3.0000e-005	3.6400e-003	0.0000		1.0000e-005	1.0000e-005		1.0000e-005	1.0000e-005		7.7300e-003	7.7300e-003	2.0000e-005		8.1700e-003
Unmitigated	0.8793	3.0000e-005	3.6400e-003	0.0000		1.0000e-005	1.0000e-005		1.0000e-005	1.0000e-005		7.7300e-003	7.7300e-003	2.0000e-005		8.1700e-003

6.2 Area by SubCategory

Unmitigated

	ROG	NOx	CO	SO2	Fugitive PM10	Exhaust PM10	PM10 Total	Fugitive PM2.5	Exhaust PM2.5	PM2.5 Total	Bio- CO2	NBio- CO2	Total CO2	CH4	N2O	CO2e
SubCategory	lb/day										lb/day					
Architectural Coating	0.1795					0.0000	0.0000		0.0000	0.0000			0.0000			0.0000
Consumer Products	0.6995					0.0000	0.0000		0.0000	0.0000			0.0000			0.0000
Landscaping	3.5000e-004	3.0000e-005	3.6400e-003	0.0000		1.0000e-005	1.0000e-005		1.0000e-005	1.0000e-005		7.7300e-003	7.7300e-003	2.0000e-005		8.1700e-003
Total	**0.8793**	**3.0000e-005**	**3.6400e-003**	**0.0000**		**1.0000e-005**	**1.0000e-005**		**1.0000e-005**	**1.0000e-005**		**7.7300e-003**	**7.7300e-003**	**2.0000e-005**		**8.1700e-003**

6.2 Area by SubCategory

Mitigated

	ROG	NOx	CO	SO2	Fugitive PM10	Exhaust PM10	PM10 Total	Fugitive PM2.5	Exhaust PM2.5	PM2.5 Total	Bio- CO2	NBio- CO2	Total CO2	CH4	N2O	CO2e
SubCategory	lb/day										lb/day					
Architectural Coating	0.1795					0.0000	0.0000		0.0000	0.0000			0.0000			0.0000
Consumer Products	0.6995					0.0000	0.0000		0.0000	0.0000			0.0000			0.0000
Landscaping	3.5000e-004	3.0000e-005	3.6400e-003	0.0000		1.0000e-005	1.0000e-005		1.0000e-005	1.0000e-005		7.7300e-003	7.7300e-003	2.0000e-005		8.1700e-003
Total	**0.8793**	**3.0000e-005**	**3.6400e-003**	**0.0000**		**1.0000e-005**	**1.0000e-005**		**1.0000e-005**	**1.0000e-005**		**7.7300e-003**	**7.7300e-003**	**2.0000e-005**		**8.1700e-003**

7.0 Water Detail

7.1 Mitigation Measures Water

8.0 Waste Detail

8.1 Mitigation Measures Waste

Institute Recycling and Composting Services

9.0 Operational Offroad

Equipment Type	Number	Hours/Day	Days/Year	Horse Power	Load Factor	Fuel Type

10.0 Vegetation

250-260 N. Canon Drive

South Coast AQMD Air District, Winter

1.0 Project Characteristics

1.1 Land Usage

Land Uses	Size	Metric	Lot Acreage	Floor Surface Area	Population
Enclosed Parking with Elevator	21.38	1000sqft	0.00	21,380.00	0
Quality Restaurant	13.95	1000sqft	0.16	13,950.00	0

1.2 Other Project Characteristics

Urbanization	Urban	**Wind Speed (m/s)**	2.2	**Precipitation Freq (Days)**	31
Climate Zone	9			**Operational Year**	2019
Utility Company	Southern California Edison				
CO2 Intensity (lb/MWhr)	630.89	**CH4 Intensity (lb/MWhr)**	0.029	**N2O Intensity (lb/MWhr)**	0.006

1.3 User Entered Comments & Non-Default Data

Project Characteristics -

Land Use - from Project Plans

Construction Phase - Based on 18-20 month construction schedule

Grading - Estimates from BH

Architectural Coating - SCAQMD Rule 1113

Vehicle Trips - Based on traffic study

Area Coating - SCAQMD Rule 1113

Construction Off-road Equipment Mitigation - SCAQMD Rule 403

Area Mitigation - SCAQMD Rule 1113

Waste Mitigation - 78% waste diversion is standard in BH

Table Name	Column Name	Default Value	New Value
tblArchitecturalCoating	EF_Nonresidential_Exterior	250.00	50.00
tblArchitecturalCoating	EF_Nonresidential_Interior	250.00	50.00
tblArchitecturalCoating	EF_Residential_Exterior	100.00	50.00
tblAreaCoating	Area_EF_Nonresidential_Exterior	250	50
tblAreaMitigation	UseLowVOCPaintNonresidentialInteriorValue	250	50
tblAreaMitigation	UseLowVOCPaintResidentialExteriorValue	100	50
tblConstructionPhase	NumDays	5.00	65.00
tblConstructionPhase	NumDays	100.00	282.00
tblConstructionPhase	NumDays	10.00	21.00
tblConstructionPhase	NumDays	2.00	41.00
tblConstructionPhase	NumDays	5.00	35.00
tblConstructionPhase	NumDays	1.00	11.00
tblConstructionPhase	PhaseEndDate	8/10/2018	7/1/2018
tblConstructionPhase	PhaseEndDate	8/17/2018	6/30/2018
tblConstructionPhase	PhaseStartDate	5/12/2018	4/1/2018
tblConstructionPhase	PhaseStartDate	7/2/2018	5/12/2018
tblGrading	AcresOfGrading	5.50	0.16
tblGrading	MaterialExported	0.00	15,278.00
tblLandUse	LotAcreage	0.49	0.00
tblLandUse	LotAcreage	0.32	0.16
tblProjectCharacteristics	OperationalYear	2014	2019
tblTripsAndVMT	HaulingTripNumber	1,910.00	0.00
tblVehicleTrips	ST_TR	94.36	50.60
tblVehicleTrips	SU_TR	72.16	50.60
tblVehicleTrips	WD_TR	89.95	50.60

2.0 Emissions Summary

2.1 Overall Construction (Maximum Daily Emission)

Unmitigated Construction

	ROG	NOx	CO	SO2	Fugitive PM10	Exhaust PM10	PM10 Total	Fugitive PM2.5	Exhaust PM2.5	PM2.5 Total	Bio- CO2	NBio- CO2	Total CO2	CH4	N2O	CO2e
Year	lb/day										lb/day					
2017	1.6966	13.2346	9.5302	0.0146	0.9067	0.8644	1.6342	0.4498	0.7952	1.1436	0.0000	1,448.0767	1,448.0767	0.3647	0.0000	1,455.7344
2018	4.3521	13.4912	11.1108	0.0180	0.2387	0.8649	1.1036	0.0640	0.8077	0.8718	0.0000	1,733.0741	1,733.0741	0.3921	0.0000	1,741.3072
Total	**6.0487**	**26.7258**	**20.6410**	**0.0326**	**1.1454**	**1.7292**	**2.7377**	**0.5138**	**1.6029**	**2.0154**	**0.0000**	**3,181.1508**	**3,181.1508**	**0.7567**	**0.0000**	**3,197.0416**

Mitigated Construction

	ROG	NOx	CO	SO2	Fugitive PM10	Exhaust PM10	PM10 Total	Fugitive PM2.5	Exhaust PM2.5	PM2.5 Total	Bio- CO2	NBio- CO2	Total CO2	CH4	N2O	CO2e
Year	lb/day										lb/day					
2017	1.6954	13.2230	9.5228	0.0146	0.4695	0.8636	1.1963	0.2187	0.7945	0.9119	0.0000	1,447.0129	1,447.0129	0.3643	0.0000	1,454.6638
2018	4.3508	13.4793	11.1020	0.0180	0.2387	0.8641	1.1028	0.0640	0.8070	0.8710	0.0000	1,731.7698	1,731.7698	0.3917	0.0000	1,739.9955
Total	**6.0462**	**26.7022**	**20.6248**	**0.0326**	**0.7082**	**1.7277**	**2.2991**	**0.2828**	**1.6015**	**1.7829**	**0.0000**	**3,178.7826**	**3,178.7826**	**0.7560**	**0.0000**	**3,194.6593**

	ROG	NOx	CO	SO2	Fugitive PM10	Exhaust PM10	PM10 Total	Fugitive PM2.5	Exhaust PM2.5	PM2.5 Total	Bio- CO2	NBio-CO2	Total CO2	CH4	N20	CO2e
Percent Reduction	**0.0403**	**0.0880**	**0.0783**	**0.0614**	**38.1704**	**0.0902**	**16.0224**	**44.9712**	**0.0905**	**11.5342**	**0.0000**	**0.0744**	**0.0744**	**0.0899**	**0.0000**	**0.0745**

2.2 Overall Operational

Unmitigated Operational

	ROG	NOx	CO	SO2	Fugitive PM10	Exhaust PM10	PM10 Total	Fugitive PM2.5	Exhaust PM2.5	PM2.5 Total	Bio- CO2	NBio- CO2	Total CO2	CH4	N2O	CO2e
Category	lb/day										lb/day					
Area	0.8793	3.0000e-005	3.6400e-003	0.0000		1.0000e-005	1.0000e-005		1.0000e-005	1.0000e-005		7.7300e-003	7.7300e-003	2.0000e-005		8.1700e-003
Energy	0.0960	0.8731	0.7334	5.2400e-003		0.0664	0.0664		0.0664	0.0664		1,047.7001	1,047.7001	0.0201	0.0192	1,054.0762
Mobile	3.8511	3.3363	14.6906	0.0314	2.1317	0.0467	2.1784	0.5696	0.0431	0.6127		2,516.7571	2,516.7571	0.0990		2,518.8355
Total	**4.8265**	**4.2094**	**15.4276**	**0.0366**	**2.1317**	**0.1131**	**2.2447**	**0.5696**	**0.1095**	**0.6790**		**3,564.4649**	**3,564.4649**	**0.1191**	**0.0192**	**3,572.9199**

Mitigated Operational

	ROG	NOx	CO	SO2	Fugitive PM10	Exhaust PM10	PM10 Total	Fugitive PM2.5	Exhaust PM2.5	PM2.5 Total	Bio- CO2	NBio- CO2	Total CO2	CH4	N2O	CO2e
Category	lb/day										lb/day					
Area	0.8793	3.0000e-005	3.6400e-003	0.0000		1.0000e-005	1.0000e-005		1.0000e-005	1.0000e-005		7.7300e-003	7.7300e-003	2.0000e-005		8.1700e-003
Energy	0.0960	0.8731	0.7334	5.2400e-003		0.0664	0.0664		0.0664	0.0664		1,047.7001	1,047.7001	0.0201	0.0192	1,054.0762
Mobile	3.8511	3.3363	14.6906	0.0314	2.1317	0.0467	2.1784	0.5696	0.0431	0.6127		2,516.7571	2,516.7571	0.0990		2,518.8355
Total	**4.8265**	**4.2094**	**15.4276**	**0.0366**	**2.1317**	**0.1131**	**2.2447**	**0.5696**	**0.1095**	**0.6790**		**3,564.4649**	**3,564.4649**	**0.1191**	**0.0192**	**3,572.9199**

	ROG	NOx	CO	SO2	Fugitive PM10	Exhaust PM10	PM10 Total	Fugitive PM2.5	Exhaust PM2.5	PM2.5 Total	Bio- CO2	NBio-CO2	Total CO2	CH4	N20	CO2e
Percent Reduction	0.0000	0.0000	0.0000	0.0000	0.0000	0.0000	0.0000	0.0000	0.0000	0.0000	0.0000	0.0000	0.0000	0.0000	0.0000	0.0000

3.0 Construction Detail

Construction Phase

Phase Number	Phase Name	Phase Type	Start Date	End Date	Num Days Week	Num Days	Phase Description
1	Demolition	Demolition	1/1/2017	1/30/2017	5	21	
2	Site Preparation	Site Preparation	1/31/2017	2/14/2017	5	11	
3	Grading	Grading	2/15/2017	4/12/2017	5	41	
4	Building Construction	Building Construction	4/13/2017	5/11/2018	5	282	
5	Architectural Coating	Architectural Coating	4/1/2018	7/1/2018	5	65	
6	Paving	Paving	5/12/2018	6/30/2018	5	35	

OffRoad Equipment

Phase Name	Offroad Equipment Type	Amount	Usage Hours	Horse Power	Load Factor
Architectural Coating	Air Compressors	1	6.00	78	0.48
Paving	Cement and Mortar Mixers	4	6.00	9	0.56
Demolition	Concrete/Industrial Saws	1	8.00	81	0.73
Grading	Concrete/Industrial Saws	1	8.00	81	0.73
Building Construction	Cranes	1	4.00	226	0.29
Building Construction	Forklifts	2	6.00	89	0.20
Site Preparation	Graders	1	8.00	174	0.41
Paving	Pavers	1	7.00	125	0.42
Paving	Rollers	1	7.00	80	0.38
Demolition	Rubber Tired Dozers	1	1.00	255	0.40
Grading	Rubber Tired Dozers	1	1.00	255	0.40
Building Construction	Tractors/Loaders/Backhoes	2	8.00	97	0.37
Demolition	Tractors/Loaders/Backhoes	2	6.00	97	0.37
Grading	Tractors/Loaders/Backhoes	2	6.00	97	0.37
Paving	Tractors/Loaders/Backhoes	1	7.00	97	0.37
Site Preparation	Tractors/Loaders/Backhoes	1	8.00	97	0.37

Trips and VMT

Phase Name	Offroad Equipment Count	Worker Trip Number	Vendor Trip Number	Hauling Trip Number	Worker Trip Length	Vendor Trip Length	Hauling Trip Length	Worker Vehicle Class	Vendor Vehicle Class	Hauling Vehicle Class
Demolition	4	10.00	0.00	0.00	14.70	6.90	20.00	LD_Mix	HDT_Mix	HHDT
Site Preparation	2	5.00	0.00	0.00	14.70	6.90	20.00	LD_Mix	HDT_Mix	HHDT
Grading	4	10.00	0.00	0.00	14.70	6.90	20.00	LD_Mix	HDT_Mix	HHDT
Building Construction	5	15.00	6.00	0.00	14.70	6.90	20.00	LD_Mix	HDT_Mix	HHDT
Paving	7	18.00	0.00	0.00	14.70	6.90	20.00	LD_Mix	HDT_Mix	HHDT
Architectural Coating	1	3.00	0.00	0.00	14.70	6.90	20.00	LD_Mix	HDT_Mix	HHDT

3.1 Mitigation Measures Construction

Water Exposed Area

Clean Paved Roads

3.2 Demolition - 2017

Unmitigated Construction On-Site

Acres of Grading: 0.16

	ROG	NOx	CO	SO2	Fugitive PM10	Exhaust PM10	PM10 Total	Fugitive PM2.5	Exhaust PM2.5	PM2.5 Total	Bio- CO2	NBio- CO2	Total CO2	CH4	N2O	CO2e
Category	lb/day										lb/day					
Off-Road	1.2049	10.4761	8.5825	0.0120		0.7266	0.7266		0.6930	0.6930		1,183.8131	1,183.8131	0.2333		1,188.7118
Total	**1.2049**	**10.4761**	**8.5825**	**0.0120**		**0.7266**	**0.7266**		**0.6930**	**0.6930**		**1,183.8131**	**1,183.8131**	**0.2333**		**1,188.7118**

3.2 Demolition - 2017

Unmitigated Construction Off-Site

Acres of Grading: 0.16

	ROG	NOx	CO	SO2	Fugitive PM10	Exhaust PM10	PM10 Total	Fugitive PM2.5	Exhaust PM2.5	PM2.5 Total	Bio- CO2	NBio- CO2	Total CO2	CH4	N2O	CO2e
Category	lb/day										lb/day					
Hauling	0.0000	0.0000	0.0000	0.0000	0.0000	0.0000	0.0000	0.0000	0.0000	0.0000		0.0000	0.0000	0.0000		0.0000
Vendor	0.0000	0.0000	0.0000	0.0000	0.0000	0.0000	0.0000	0.0000	0.0000	0.0000		0.0000	0.0000	0.0000		0.0000
Worker	0.2231	0.0518	0.5398	1.3300e-003	0.1118	9.0000e-004	0.1127	0.0296	8.3000e-004	0.0305		107.2861	107.2861	5.6300e-003		107.4043
Total	**0.2231**	**0.0518**	**0.5398**	**1.3300e-003**	**0.1118**	**9.0000e-004**	**0.1127**	**0.0296**	**8.3000e-004**	**0.0305**		**107.2861**	**107.2861**	**5.6300e-003**		**107.4043**

Mitigated Construction On-Site

	ROG	NOx	CO	SO2	Fugitive PM10	Exhaust PM10	PM10 Total	Fugitive PM2.5	Exhaust PM2.5	PM2.5 Total	Bio- CO2	NBio- CO2	Total CO2	CH4	N2O	CO2e
Category	lb/day										lb/day					
Off-Road	1.2038	10.4665	8.5746	0.0120		0.7259	0.7259		0.6924	0.6924	0.0000	1,182.7271	1,182.7271	0.2331		1,187.6213
Total	**1.2038**	**10.4665**	**8.5746**	**0.0120**		**0.7259**	**0.7259**		**0.6924**	**0.6924**	**0.0000**	**1,182.7271**	**1,182.7271**	**0.2331**		**1,187.6213**

3.2 Demolition - 2017

Mitigated Construction Off-Site

Acres of Grading: 0.16

	ROG	NOx	CO	SO2	Fugitive PM10	Exhaust PM10	PM10 Total	Fugitive PM2.5	Exhaust PM2.5	PM2.5 Total	Bio- CO2	NBio- CO2	Total CO2	CH4	N2O	CO2e
Category	lb/day										lb/day					
Hauling	0.0000	0.0000	0.0000	0.0000	0.0000	0.0000	0.0000	0.0000	0.0000	0.0000		0.0000	0.0000	0.0000		0.0000
Vendor	0.0000	0.0000	0.0000	0.0000	0.0000	0.0000	0.0000	0.0000	0.0000	0.0000		0.0000	0.0000	0.0000		0.0000
Worker	0.2231	0.0518	0.5398	1.3300e-003	0.1118	9.0000e-004	0.1127	0.0296	8.3000e-004	0.0305		107.2861	107.2861	5.6300e-003		107.4043
Total	**0.2231**	**0.0518**	**0.5398**	**1.3300e-003**	**0.1118**	**9.0000e-004**	**0.1127**	**0.0296**	**8.3000e-004**	**0.0305**		**107.2861**	**107.2861**	**5.6300e-003**		**107.4043**

3.3 Site Preparation - 2017

Unmitigated Construction On-Site

Acres of Grading: 0

	ROG	NOx	CO	SO2	Fugitive PM10	Exhaust PM10	PM10 Total	Fugitive PM2.5	Exhaust PM2.5	PM2.5 Total	Bio- CO2	NBio- CO2	Total CO2	CH4	N2O	CO2e
Category	lb/day										lb/day					
Fugitive Dust					0.0154	0.0000	0.0154	1.6700e-003	0.0000	1.6700e-003			0.0000			0.0000
Off-Road	1.2694	12.6852	7.2319	9.3300e-003		0.7705	0.7705		0.7089	0.7089		955.8663	955.8663	0.2929		962.0167
Total	**1.2694**	**12.6852**	**7.2319**	**9.3300e-003**	**0.0154**	**0.7705**	**0.7859**	**1.6700e-003**	**0.7089**	**0.7105**		**955.8663**	**955.8663**	**0.2929**		**962.0167**

3.3 Site Preparation - 2017

Unmitigated Construction Off-Site

Acres of Grading: 0

	ROG	NOx	CO	SO2	Fugitive PM10	Exhaust PM10	PM10 Total	Fugitive PM2.5	Exhaust PM2.5	PM2.5 Total	Bio- CO2	NBio- CO2	Total CO2	CH4	N2O	CO2e
Category	lb/day										lb/day					
Hauling	0.0000	0.0000	0.0000	0.0000	0.0000	0.0000	0.0000	0.0000	0.0000	0.0000		0.0000	0.0000	0.0000		0.0000
Vendor	0.0000	0.0000	0.0000	0.0000	0.0000	0.0000	0.0000	0.0000	0.0000	0.0000		0.0000	0.0000	0.0000		0.0000
Worker	0.1115	0.0259	0.2699	6.6000e-004	0.0559	4.5000e-004	0.0563	0.0148	4.1000e-004	0.0152		53.6430	53.6430	2.8200e-003		53.7022
Total	**0.1115**	**0.0259**	**0.2699**	**6.6000e-004**	**0.0559**	**4.5000e-004**	**0.0563**	**0.0148**	**4.1000e-004**	**0.0152**		**53.6430**	**53.6430**	**2.8200e-003**		**53.7022**

Mitigated Construction On-Site

	ROG	NOx	CO	SO2	Fugitive PM10	Exhaust PM10	PM10 Total	Fugitive PM2.5	Exhaust PM2.5	PM2.5 Total	Bio- CO2	NBio- CO2	Total CO2	CH4	N2O	CO2e
Category	lb/day										lb/day					
Fugitive Dust					6.9400e-003	0.0000	6.9400e-003	7.5000e-004	0.0000	7.5000e-004			0.0000			0.0000
Off-Road	1.2682	12.6736	7.2253	9.3200e-003		0.7698	0.7698		0.7082	0.7082	0.0000	954.9894	954.9894	0.2926		961.1341
Total	**1.2682**	**12.6736**	**7.2253**	**9.3200e-003**	**6.9400e-003**	**0.7698**	**0.7767**	**7.5000e-004**	**0.7082**	**0.7090**	**0.0000**	**954.9894**	**954.9894**	**0.2926**		**961.1341**

3.3 Site Preparation - 2017

Mitigated Construction Off-Site

Acres of Grading: 0

	ROG	NOx	CO	SO2	Fugitive PM10	Exhaust PM10	PM10 Total	Fugitive PM2.5	Exhaust PM2.5	PM2.5 Total	Bio- CO2	NBio- CO2	Total CO2	CH4	N2O	CO2e
Category	lb/day										lb/day					
Hauling	0.0000	0.0000	0.0000	0.0000	0.0000	0.0000	0.0000	0.0000	0.0000	0.0000		0.0000	0.0000	0.0000		0.0000
Vendor	0.0000	0.0000	0.0000	0.0000	0.0000	0.0000	0.0000	0.0000	0.0000	0.0000		0.0000	0.0000	0.0000		0.0000
Worker	0.1115	0.0259	0.2699	6.6000e-004	0.0559	4.5000e-004	0.0563	0.0148	4.1000e-004	0.0152		53.6430	53.6430	2.8200e-003		53.7022
Total	**0.1115**	**0.0259**	**0.2699**	**6.6000e-004**	**0.0559**	**4.5000e-004**	**0.0563**	**0.0148**	**4.1000e-004**	**0.0152**		**53.6430**	**53.6430**	**2.8200e-003**		**53.7022**

3.4 Grading - 2017

Unmitigated Construction On-Site

	ROG	NOx	CO	SO2	Fugitive PM10	Exhaust PM10	PM10 Total	Fugitive PM2.5	Exhaust PM2.5	PM2.5 Total	Bio- CO2	NBio- CO2	Total CO2	CH4	N2O	CO2e
Category	lb/day										lb/day					
Fugitive Dust					0.7949	0.0000	0.7949	0.4202	0.0000	0.4202			0.0000			0.0000
Off-Road	1.2049	10.4761	8.5825	0.0120		0.7266	0.7266		0.6930	0.6930		1,183.8131	1,183.8131	0.2333		1,188.7118
Total	**1.2049**	**10.4761**	**8.5825**	**0.0120**	**0.7949**	**0.7266**	**1.5215**	**0.4202**	**0.6930**	**1.1132**		**1,183.8131**	**1,183.8131**	**0.2333**		**1,188.7118**

3.4 Grading - 2017

Unmitigated Construction Off-Site

	ROG	NOx	CO	SO2	Fugitive PM10	Exhaust PM10	PM10 Total	Fugitive PM2.5	Exhaust PM2.5	PM2.5 Total	Bio- CO2	NBio- CO2	Total CO2	CH4	N2O	CO2e
Category	lb/day										lb/day					
Hauling	0.0000	0.0000	0.0000	0.0000	0.0000	0.0000	0.0000	0.0000	0.0000	0.0000		0.0000	0.0000	0.0000		0.0000
Vendor	0.0000	0.0000	0.0000	0.0000	0.0000	0.0000	0.0000	0.0000	0.0000	0.0000		0.0000	0.0000	0.0000		0.0000
Worker	0.2231	0.0518	0.5398	1.3300e-003	0.1118	9.0000e-004	0.1127	0.0296	8.3000e-004	0.0305		107.2861	107.2861	5.6300e-003		107.4043
Total	**0.2231**	**0.0518**	**0.5398**	**1.3300e-003**	**0.1118**	**9.0000e-004**	**0.1127**	**0.0296**	**8.3000e-004**	**0.0305**		**107.2861**	**107.2861**	**5.6300e-003**		**107.4043**

Mitigated Construction On-Site

	ROG	NOx	CO	SO2	Fugitive PM10	Exhaust PM10	PM10 Total	Fugitive PM2.5	Exhaust PM2.5	PM2.5 Total	Bio- CO2	NBio- CO2	Total CO2	CH4	N2O	CO2e
Category	lb/day										lb/day					
Fugitive Dust					0.3577	0.0000	0.3577	0.1891	0.0000	0.1891			0.0000			0.0000
Off-Road	1.2038	10.4665	8.5746	0.0120		0.7259	0.7259		0.6924	0.6924	0.0000	1,182.7271	1,182.7271	0.2331		1,187.6213
Total	**1.2038**	**10.4665**	**8.5746**	**0.0120**	**0.3577**	**0.7259**	**1.0836**	**0.1891**	**0.6924**	**0.8814**	**0.0000**	**1,182.7271**	**1,182.7271**	**0.2331**		**1,187.6213**

3.4 Grading - 2017

Mitigated Construction Off-Site

	ROG	NOx	CO	SO2	Fugitive PM10	Exhaust PM10	PM10 Total	Fugitive PM2.5	Exhaust PM2.5	PM2.5 Total	Bio- CO2	NBio- CO2	Total CO2	CH4	N2O	CO2e
Category	lb/day										lb/day					
Hauling	0.0000	0.0000	0.0000	0.0000	0.0000	0.0000	0.0000	0.0000	0.0000	0.0000		0.0000	0.0000	0.0000		0.0000
Vendor	0.0000	0.0000	0.0000	0.0000	0.0000	0.0000	0.0000	0.0000	0.0000	0.0000		0.0000	0.0000	0.0000		0.0000
Worker	0.2231	0.0518	0.5398	1.3300e-003	0.1118	9.0000e-004	0.1127	0.0296	8.3000e-004	0.0305		107.2861	107.2861	5.6300e-003		107.4043
Total	**0.2231**	**0.0518**	**0.5398**	**1.3300e-003**	**0.1118**	**9.0000e-004**	**0.1127**	**0.0296**	**8.3000e-004**	**0.0305**		**107.2861**	**107.2861**	**5.6300e-003**		**107.4043**

3.5 Building Construction - 2017

Unmitigated Construction On-Site

Acres of Paving: 0

	ROG	NOx	CO	SO2	Fugitive PM10	Exhaust PM10	PM10 Total	Fugitive PM2.5	Exhaust PM2.5	PM2.5 Total	Bio- CO2	NBio- CO2	Total CO2	CH4	N2O	CO2e
Category	lb/day										lb/day					
Off-Road	1.2740	12.6738	8.0395	0.0113		0.8553	0.8553		0.7869	0.7869		1,159.5310	1,159.5310	0.3553		1,166.9919
Total	**1.2740**	**12.6738**	**8.0395**	**0.0113**		**0.8553**	**0.8553**		**0.7869**	**0.7869**		**1,159.5310**	**1,159.5310**	**0.3553**		**1,166.9919**

3.5 Building Construction - 2017

Unmitigated Construction Off-Site

Acres of Paving: 0

	ROG	NOx	CO	SO2	Fugitive PM10	Exhaust PM10	PM10 Total	Fugitive PM2.5	Exhaust PM2.5	PM2.5 Total	Bio- CO2	NBio- CO2	Total CO2	CH4	N2O	CO2e
Category	lb/day										lb/day					
Hauling	0.0000	0.0000	0.0000	0.0000	0.0000	0.0000	0.0000	0.0000	0.0000	0.0000		0.0000	0.0000	0.0000		0.0000
Vendor	0.0880	0.4831	0.6810	1.2900e-003	0.0375	7.6800e-003	0.0452	0.0107	7.0700e-003	0.0178		127.6165	127.6165	9.3000e-004		127.6360
Worker	0.3346	0.0776	0.8097	1.9900e-003	0.1677	1.3500e-003	0.1690	0.0445	1.2400e-003	0.0457		160.9291	160.9291	8.4500e-003		161.1065
Total	**0.4226**	**0.5608**	**1.4907**	**3.2800e-003**	**0.2052**	**9.0300e-003**	**0.2142**	**0.0552**	**8.3100e-003**	**0.0635**		**288.5456**	**288.5456**	**9.3800e-003**		**288.7426**

Mitigated Construction On-Site

	ROG	NOx	CO	SO2	Fugitive PM10	Exhaust PM10	PM10 Total	Fugitive PM2.5	Exhaust PM2.5	PM2.5 Total	Bio- CO2	NBio- CO2	Total CO2	CH4	N2O	CO2e
Category	lb/day										lb/day					
Off-Road	1.2728	12.6622	8.0321	0.0113		0.8546	0.8546		0.7862	0.7862	0.0000	1,158.4672	1,158.4672	0.3550		1,165.9212
Total	**1.2728**	**12.6622**	**8.0321**	**0.0113**		**0.8546**	**0.8546**		**0.7862**	**0.7862**	**0.0000**	**1,158.4672**	**1,158.4672**	**0.3550**		**1,165.9212**

3.5 Building Construction - 2017

Mitigated Construction Off-Site

Acres of Paving: 0

	ROG	NOx	CO	SO2	Fugitive PM10	Exhaust PM10	PM10 Total	Fugitive PM2.5	Exhaust PM2.5	PM2.5 Total	Bio- CO2	NBio- CO2	Total CO2	CH4	N2O	CO2e
Category	lb/day										lb/day					
Hauling	0.0000	0.0000	0.0000	0.0000	0.0000	0.0000	0.0000	0.0000	0.0000	0.0000		0.0000	0.0000	0.0000		0.0000
Vendor	0.0880	0.4831	0.6810	1.2900e-003	0.0375	7.6800e-003	0.0452	0.0107	7.0700e-003	0.0178		127.6165	127.6165	9.3000e-004		127.6360
Worker	0.3346	0.0776	0.8097	1.9900e-003	0.1677	1.3500e-003	0.1690	0.0445	1.2400e-003	0.0457		160.9291	160.9291	8.4500e-003		161.1065
Total	**0.4226**	**0.5608**	**1.4907**	**3.2800e-003**	**0.2052**	**9.0300e-003**	**0.2142**	**0.0552**	**8.3100e-003**	**0.0635**		**288.5456**	**288.5456**	**9.3800e-003**		**288.7426**

3.5 Building Construction - 2018

Unmitigated Construction On-Site

	ROG	NOx	CO	SO2	Fugitive PM10	Exhaust PM10	PM10 Total	Fugitive PM2.5	Exhaust PM2.5	PM2.5 Total	Bio- CO2	NBio- CO2	Total CO2	CH4	N2O	CO2e
Category	lb/day										lb/day					
Off-Road	1.0786	10.9578	7.7239	0.0113		0.7055	0.7055		0.6491	0.6491		1,140.2487	1,140.2487	0.3550		1,147.7032
Total	**1.0786**	**10.9578**	**7.7239**	**0.0113**		**0.7055**	**0.7055**		**0.6491**	**0.6491**		**1,140.2487**	**1,140.2487**	**0.3550**		**1,147.7032**

3.5 Building Construction - 2018

Unmitigated Construction Off-Site

Acres of Paving: 0

	ROG	NOx	CO	SO2	Fugitive PM10	Exhaust PM10	PM10 Total	Fugitive PM2.5	Exhaust PM2.5	PM2.5 Total	Bio- CO2	NBio- CO2	Total CO2	CH4	N2O	CO2e
Category	lb/day										lb/day					
Hauling	0.0000	0.0000	0.0000	0.0000	0.0000	0.0000	0.0000	0.0000	0.0000	0.0000		0.0000	0.0000	0.0000		0.0000
Vendor	0.0807	0.4432	0.6535	1.2900e-003	0.0375	7.2400e-003	0.0448	0.0107	6.6600e-003	0.0173		125.4728	125.4728	9.3000e-004		125.4922
Worker	0.3124	0.0704	0.7327	1.9900e-003	0.1677	1.3100e-003	0.1690	0.0445	1.2100e-003	0.0457		154.9201	154.9201	7.8400e-003		155.0847
Total	**0.3931**	**0.5136**	**1.3861**	**3.2800e-003**	**0.2052**	**8.5500e-003**	**0.2137**	**0.0552**	**7.8700e-003**	**0.0630**		**280.3928**	**280.3928**	**8.7700e-003**		**280.5769**

Mitigated Construction On-Site

	ROG	NOx	CO	SO2	Fugitive PM10	Exhaust PM10	PM10 Total	Fugitive PM2.5	Exhaust PM2.5	PM2.5 Total	Bio- CO2	NBio- CO2	Total CO2	CH4	N2O	CO2e
Category	lb/day										lb/day					
Off-Road	1.0776	10.9477	7.7168	0.0113		0.7048	0.7048		0.6485	0.6485	0.0000	1,139.2026	1,139.2026	0.3547		1,146.6502
Total	**1.0776**	**10.9477**	**7.7168**	**0.0113**		**0.7048**	**0.7048**		**0.6485**	**0.6485**	**0.0000**	**1,139.2026**	**1,139.2026**	**0.3547**		**1,146.6502**

3.5 Building Construction - 2018

Mitigated Construction Off-Site

Acres of Paving: 0

	ROG	NOx	CO	SO2	Fugitive PM10	Exhaust PM10	PM10 Total	Fugitive PM2.5	Exhaust PM2.5	PM2.5 Total	Bio- CO2	NBio- CO2	Total CO2	CH4	N2O	CO2e
Category	lb/day										lb/day					
Hauling	0.0000	0.0000	0.0000	0.0000	0.0000	0.0000	0.0000	0.0000	0.0000	0.0000		0.0000	0.0000	0.0000		0.0000
Vendor	0.0807	0.4432	0.6535	1.2900e-003	0.0375	7.2400e-003	0.0448	0.0107	6.6600e-003	0.0173		125.4728	125.4728	9.3000e-004		125.4922
Worker	0.3124	0.0704	0.7327	1.9900e-003	0.1677	1.3100e-003	0.1690	0.0445	1.2100e-003	0.0457		154.9201	154.9201	7.8400e-003		155.0847
Total	**0.3931**	**0.5136**	**1.3861**	**3.2800e-003**	**0.2052**	**8.5500e-003**	**0.2137**	**0.0552**	**7.8700e-003**	**0.0630**		**280.3928**	**280.3928**	**8.7700e-003**		**280.5769**

3.6 Architectural Coating - 2018

Unmitigated Construction On-Site

	ROG	NOx	CO	SO2	Fugitive PM10	Exhaust PM10	PM10 Total	Fugitive PM2.5	Exhaust PM2.5	PM2.5 Total	Bio- CO2	NBio- CO2	Total CO2	CH4	N2O	CO2e
Category	lb/day										lb/day					
Archit. Coating	2.5193					0.0000	0.0000		0.0000	0.0000			0.0000			0.0000
Off-Road	0.2986	2.0058	1.8542	2.9700e-003		0.1506	0.1506		0.1506	0.1506		281.4485	281.4485	0.0267		282.0102
Total	**2.8179**	**2.0058**	**1.8542**	**2.9700e-003**		**0.1506**	**0.1506**		**0.1506**	**0.1506**		**281.4485**	**281.4485**	**0.0267**		**282.0102**

3.6 Architectural Coating - 2018

Unmitigated Construction Off-Site

	ROG	NOx	CO	SO2	Fugitive PM10	Exhaust PM10	PM10 Total	Fugitive PM2.5	Exhaust PM2.5	PM2.5 Total	Bio- CO2	NBio- CO2	Total CO2	CH4	N2O	CO2e
Category	lb/day										lb/day					
Hauling	0.0000	0.0000	0.0000	0.0000	0.0000	0.0000	0.0000	0.0000	0.0000	0.0000		0.0000	0.0000	0.0000		0.0000
Vendor	0.0000	0.0000	0.0000	0.0000	0.0000	0.0000	0.0000	0.0000	0.0000	0.0000		0.0000	0.0000	0.0000		0.0000
Worker	0.0625	0.0141	0.1465	4.0000e-004	0.0335	2.6000e-004	0.0338	8.8900e-003	2.4000e-004	9.1400e-003		30.9840	30.9840	1.5700e-003		31.0169
Total	**0.0625**	**0.0141**	**0.1465**	**4.0000e-004**	**0.0335**	**2.6000e-004**	**0.0338**	**8.8900e-003**	**2.4000e-004**	**9.1400e-003**		**30.9840**	**30.9840**	**1.5700e-003**		**31.0169**

Mitigated Construction On-Site

	ROG	NOx	CO	SO2	Fugitive PM10	Exhaust PM10	PM10 Total	Fugitive PM2.5	Exhaust PM2.5	PM2.5 Total	Bio- CO2	NBio- CO2	Total CO2	CH4	N2O	CO2e
Category	lb/day										lb/day					
Archit. Coating	2.5193					0.0000	0.0000		0.0000	0.0000			0.0000			0.0000
Off-Road	0.2984	2.0039	1.8525	2.9700e-003		0.1504	0.1504		0.1504	0.1504	0.0000	281.1903	281.1903	0.0267		281.7514
Total	**2.8177**	**2.0039**	**1.8525**	**2.9700e-003**		**0.1504**	**0.1504**		**0.1504**	**0.1504**	**0.0000**	**281.1903**	**281.1903**	**0.0267**		**281.7514**

3.6 Architectural Coating - 2018

Mitigated Construction Off-Site

	ROG	NOx	CO	SO2	Fugitive PM10	Exhaust PM10	PM10 Total	Fugitive PM2.5	Exhaust PM2.5	PM2.5 Total	Bio- CO2	NBio- CO2	Total CO2	CH4	N2O	CO2e
Category	lb/day										lb/day					
Hauling	0.0000	0.0000	0.0000	0.0000	0.0000	0.0000	0.0000	0.0000	0.0000	0.0000		0.0000	0.0000	0.0000		0.0000
Vendor	0.0000	0.0000	0.0000	0.0000	0.0000	0.0000	0.0000	0.0000	0.0000	0.0000		0.0000	0.0000	0.0000		0.0000
Worker	0.0625	0.0141	0.1465	4.0000e-004	0.0335	2.6000e-004	0.0338	8.8900e-003	2.4000e-004	9.1400e-003		30.9840	30.9840	1.5700e-003		31.0169
Total	**0.0625**	**0.0141**	**0.1465**	**4.0000e-004**	**0.0335**	**2.6000e-004**	**0.0338**	**8.8900e-003**	**2.4000e-004**	**9.1400e-003**		**30.9840**	**30.9840**	**1.5700e-003**		**31.0169**

3.7 Paving - 2018

Unmitigated Construction On-Site

Residential Indoor: 0; Residential Outdoor: 0; Non-Residential Indoor: 52,995; Non-Residential Outdoor: 17,665

	ROG	NOx	CO	SO2	Fugitive PM10	Exhaust PM10	PM10 Total	Fugitive PM2.5	Exhaust PM2.5	PM2.5 Total	Bio- CO2	NBio- CO2	Total CO2	CH4	N2O	CO2e
Category	lb/day										lb/day					
Off-Road	0.9092	8.6233	7.1255	0.0111		0.5050	0.5050		0.4681	0.4681		1,054.2145	1,054.2145	0.2968		1,060.4462
Paving	0.0000					0.0000	0.0000		0.0000	0.0000			0.0000			0.0000
Total	**0.9092**	**8.6233**	**7.1255**	**0.0111**		**0.5050**	**0.5050**		**0.4681**	**0.4681**		**1,054.2145**	**1,054.2145**	**0.2968**		**1,060.4462**

3.7 Paving - 2018

Unmitigated Construction Off-Site

Residential Indoor: 0; Residential Outdoor: 0; Non-Residential Indoor: 52,995; Non-Residential Outdoor: 17,665

	ROG	NOx	CO	SO2	Fugitive PM10	Exhaust PM10	PM10 Total	Fugitive PM2.5	Exhaust PM2.5	PM2.5 Total	Bio- CO2	NBio- CO2	Total CO2	CH4	N2O	CO2e
Category	lb/day										lb/day					
Hauling	0.0000	0.0000	0.0000	0.0000	0.0000	0.0000	0.0000	0.0000	0.0000	0.0000		0.0000	0.0000	0.0000		0.0000
Vendor	0.0000	0.0000	0.0000	0.0000	0.0000	0.0000	0.0000	0.0000	0.0000	0.0000		0.0000	0.0000	0.0000		0.0000
Worker	0.3748	0.0845	0.8792	2.3900e-003	0.2012	1.5700e-003	0.2028	0.0534	1.4600e-003	0.0548		185.9041	185.9041	9.4100e-003		186.1016
Total	**0.3748**	**0.0845**	**0.8792**	**2.3900e-003**	**0.2012**	**1.5700e-003**	**0.2028**	**0.0534**	**1.4600e-003**	**0.0548**		**185.9041**	**185.9041**	**9.4100e-003**		**186.1016**

Mitigated Construction On-Site

	ROG	NOx	CO	SO2	Fugitive PM10	Exhaust PM10	PM10 Total	Fugitive PM2.5	Exhaust PM2.5	PM2.5 Total	Bio- CO2	NBio- CO2	Total CO2	CH4	N2O	CO2e
Category	lb/day										lb/day					
Off-Road	0.9084	8.6154	7.1190	0.0111		0.5045	0.5045		0.4676	0.4676	0.0000	1,053.2473	1,053.2473	0.2965		1,059.4733
Paving	0.0000					0.0000	0.0000		0.0000	0.0000			0.0000			0.0000
Total	**0.9084**	**8.6154**	**7.1190**	**0.0111**		**0.5045**	**0.5045**		**0.4676**	**0.4676**	**0.0000**	**1,053.2473**	**1,053.2473**	**0.2965**		**1,059.4733**

3.7 Paving - 2018

Mitigated Construction Off-Site

Residential Indoor: 0; Residential Outdoor: 0; Non-Residential Indoor: 52,995; Non-Residential Outdoor: 17,665

	ROG	NOx	CO	SO2	Fugitive PM10	Exhaust PM10	PM10 Total	Fugitive PM2.5	Exhaust PM2.5	PM2.5 Total	Bio- CO2	NBio- CO2	Total CO2	CH4	N2O	CO2e
Category	lb/day										lb/day					
Hauling	0.0000	0.0000	0.0000	0.0000	0.0000	0.0000	0.0000	0.0000	0.0000	0.0000		0.0000	0.0000	0.0000		0.0000
Vendor	0.0000	0.0000	0.0000	0.0000	0.0000	0.0000	0.0000	0.0000	0.0000	0.0000		0.0000	0.0000	0.0000		0.0000
Worker	0.3748	0.0845	0.8792	2.3900e-003	0.2012	1.5700e-003	0.2028	0.0534	1.4600e-003	0.0548		185.9041	185.9041	9.4100e-003		186.1016
Total	**0.3748**	**0.0845**	**0.8792**	**2.3900e-003**	**0.2012**	**1.5700e-003**	**0.2028**	**0.0534**	**1.4600e-003**	**0.0548**		**185.9041**	**185.9041**	**9.4100e-003**		**186.1016**

4.0 Operational Detail - Mobile

4.1 Mitigation Measures Mobile

	ROG	NOx	CO	SO2	Fugitive PM10	Exhaust PM10	PM10 Total	Fugitive PM2.5	Exhaust PM2.5	PM2.5 Total	Bio- CO2	NBio- CO2	Total CO2	CH4	N2O	CO2e
Category	lb/day										lb/day					
Mitigated	3.8511	3.3363	14.6906	0.0314	2.1317	0.0467	2.1784	0.5696	0.0431	0.6127		2,516.7571	2,516.7571	0.0990		2,518.8355
Unmitigated	3.8511	3.3363	14.6906	0.0314	2.1317	0.0467	2.1784	0.5696	0.0431	0.6127		2,516.7571	2,516.7571	0.0990		2,518.8355

4.2 Trip Summary Information

	Average Daily Trip Rate			Unmitigated	Mitigated
Land Use	Weekday	Saturday	Sunday	Annual VMT	Annual VMT
Enclosed Parking with Elevator	0.00	0.00	0.00		
Quality Restaurant	705.87	705.87	705.87	1,004,899	1,004,899
Total	705.87	705.87	705.87	1,004,899	1,004,899

4.3 Trip Type Information

	Miles			Trip %			Trip Purpose %		
Land Use	H-W or C-W	H-S or C-C	H-O or C-NW	H-W or C-W	H-S or C-C	H-O or C-NW	Primary	Diverted	Pass-by
Enclosed Parking with Elevator	16.60	8.40	6.90	0.00	0.00	0.00	0	0	0
Quality Restaurant	16.60	8.40	6.90	12.00	69.00	19.00	38	18	44

4.4 Fleet Mix

LDA	LDT1	LDT2	MDV	LHD1	LHD2	MHD	HHD	OBUS	UBUS	MCY	SBUS	MH
0.510142	0.059804	0.180842	0.139058	0.042603	0.006701	0.016107	0.033206	0.001939	0.002487	0.004384	0.000580	0.002146

5.0 Energy Detail

Historical Energy Use: N

5.1 Mitigation Measures Energy

	ROG	NOx	CO	SO2	Fugitive PM10	Exhaust PM10	PM10 Total	Fugitive PM2.5	Exhaust PM2.5	PM2.5 Total	Bio- CO2	NBio- CO2	Total CO2	CH4	N2O	CO2e
Category	lb/day										lb/day					
NaturalGas Mitigated	0.0960	0.8731	0.7334	5.2400e-003		0.0664	0.0664		0.0664	0.0664		1,047.7001	1,047.7001	0.0201	0.0192	1,054.0762
NaturalGas Unmitigated	0.0960	0.8731	0.7334	5.2400e-003		0.0664	0.0664		0.0664	0.0664		1,047.7001	1,047.7001	0.0201	0.0192	1,054.0762

5.2 Energy by Land Use - NaturalGas

Unmitigated

	NaturalGas Use	ROG	NOx	CO	SO2	Fugitive PM10	Exhaust PM10	PM10 Total	Fugitive PM2.5	Exhaust PM2.5	PM2.5 Total	Bio- CO2	NBio- CO2	Total CO2	CH4	N2O	CO2e
Land Use	kBTU/yr	lb/day										lb/day					
Enclosed Parking with Elevator	0	0.0000	0.0000	0.0000	0.0000		0.0000	0.0000		0.0000	0.0000		0.0000	0.0000	0.0000	0.0000	0.0000
Quality Restaurant	8905.45	0.0960	0.8731	0.7334	5.2400e-003		0.0664	0.0664		0.0664	0.0664		1,047.7001	1,047.7001	0.0201	0.0192	1,054.0762
Total		**0.0960**	**0.8731**	**0.7334**	**5.2400e-003**		**0.0664**	**0.0664**		**0.0664**	**0.0664**		**1,047.7001**	**1,047.7001**	**0.0201**	**0.0192**	**1,054.0762**

Mitigated

	NaturalGas Use	ROG	NOx	CO	SO2	Fugitive PM10	Exhaust PM10	PM10 Total	Fugitive PM2.5	Exhaust PM2.5	PM2.5 Total	Bio- CO2	NBio- CO2	Total CO2	CH4	N2O	CO2e
Land Use	kBTU/yr	lb/day										lb/day					
Quality Restaurant	8.90545	0.0960	0.8731	0.7334	5.2400e-003		0.0664	0.0664		0.0664	0.0664		1,047.7001	1,047.7001	0.0201	0.0192	1,054.0762
Enclosed Parking with Elevator	0	0.0000	0.0000	0.0000	0.0000		0.0000	0.0000		0.0000	0.0000		0.0000	0.0000	0.0000	0.0000	0.0000
Total		**0.0960**	**0.8731**	**0.7334**	**5.2400e-003**		**0.0664**	**0.0664**		**0.0664**	**0.0664**		**1,047.7001**	**1,047.7001**	**0.0201**	**0.0192**	**1,054.0762**

6.0 Area Detail

6.1 Mitigation Measures Area

	ROG	NOx	CO	SO2	Fugitive PM10	Exhaust PM10	PM10 Total	Fugitive PM2.5	Exhaust PM2.5	PM2.5 Total	Bio- CO2	NBio- CO2	Total CO2	CH4	N2O	CO2e
Category	lb/day										lb/day					
Mitigated	0.8793	3.0000e-005	3.6400e-003	0.0000		1.0000e-005	1.0000e-005		1.0000e-005	1.0000e-005		7.7300e-003	7.7300e-003	2.0000e-005		8.1700e-003
Unmitigated	0.8793	3.0000e-005	3.6400e-003	0.0000		1.0000e-005	1.0000e-005		1.0000e-005	1.0000e-005		7.7300e-003	7.7300e-003	2.0000e-005		8.1700e-003

6.2 Area by SubCategory

Unmitigated

	ROG	NOx	CO	SO2	Fugitive PM10	Exhaust PM10	PM10 Total	Fugitive PM2.5	Exhaust PM2.5	PM2.5 Total	Bio- CO2	NBio- CO2	Total CO2	CH4	N2O	CO2e
SubCategory	lb/day										lb/day					
Architectural Coating	0.1795					0.0000	0.0000		0.0000	0.0000			0.0000			0.0000
Consumer Products	0.6995					0.0000	0.0000		0.0000	0.0000			0.0000			0.0000
Landscaping	3.5000e-004	3.0000e-005	3.6400e-003	0.0000		1.0000e-005	1.0000e-005		1.0000e-005	1.0000e-005		7.7300e-003	7.7300e-003	2.0000e-005		8.1700e-003
Total	**0.8793**	**3.0000e-005**	**3.6400e-003**	**0.0000**		**1.0000e-005**	**1.0000e-005**		**1.0000e-005**	**1.0000e-005**		**7.7300e-003**	**7.7300e-003**	**2.0000e-005**		**8.1700e-003**

6.2 Area by SubCategory

Mitigated

	ROG	NOx	CO	SO2	Fugitive PM10	Exhaust PM10	PM10 Total	Fugitive PM2.5	Exhaust PM2.5	PM2.5 Total	Bio- CO2	NBio- CO2	Total CO2	CH4	N2O	CO2e
SubCategory	lb/day										lb/day					
Architectural Coating	0.1795					0.0000	0.0000		0.0000	0.0000			0.0000			0.0000
Consumer Products	0.6995					0.0000	0.0000		0.0000	0.0000			0.0000			0.0000
Landscaping	3.5000e-004	3.0000e-005	3.6400e-003	0.0000		1.0000e-005	1.0000e-005		1.0000e-005	1.0000e-005		7.7300e-003	7.7300e-003	2.0000e-005		8.1700e-003
Total	**0.8793**	**3.0000e-005**	**3.6400e-003**	**0.0000**		**1.0000e-005**	**1.0000e-005**		**1.0000e-005**	**1.0000e-005**		**7.7300e-003**	**7.7300e-003**	**2.0000e-005**		**8.1700e-003**

7.0 Water Detail

7.1 Mitigation Measures Water

8.0 Waste Detail

8.1 Mitigation Measures Waste

Institute Recycling and Composting Services

9.0 Operational Offroad

Equipment Type	Number	Hours/Day	Days/Year	Horse Power	Load Factor	Fuel Type

10.0 Vegetation