AGENDA REPORT

Meeting Date: December 21, 2010

Item Number: D-1

To: Honorable Mayor and City Council

From: George Chavez, Assistant Director of Community Development
Greg Barton, Fire Marshal

Subject:

A). AN ORDINANCE OF THE CITY OF BEVERLY HILLS AMENDING THE UNIFORM ADMINISTRATIVE CODE, 1997 EDITION AND ADOPTING BY REFERENCE THE 2010 CALIFORNIA BUILDING CODE; THE 2010 CALIFORNIA RESIDENTIAL CODE; THE 2010 CALIFORNIA ELECTRICAL CODE; THE 2010 CALIFORNIA MECHANICAL CODE; THE 2010 CALIFORNIA PLUMBING CODE; THE UNIFORM SWIMMING POOL, SPA AND HOT TUB CODE, 2009 EDITION; THE CALIFORNIA ENERGY CODE, 2010 EDITION; THE 2010 CALIFORNIA FIRE CODE; THE CALIFORNIA GREEN BUILDING STANDARDS CODE, 2010 EDITION; THE 2010 CALIFORNIA HISTORICAL BUILDING CODE; THE 2010 CALIFORNIA EXISTING BUILDING CODE; THE 2010 CALIFORNIA REFERENCE STANDARDS CODE; THE INTERNATIONAL PROPERTY MAINTENANCE CODE, 2009 EDITION; THE BEVERLY HILLS PHOTOVOLTAIC INSTALLATION GUIDELINES, 2010 EDITION; INCLUDING CERTAIN AMENDMENTS, ADDITIONS, AND DELETIONS; AND AMENDING PORTIONS OF TITLE 9 OF THE BEVERLY HILLS MUNICIPAL CODE.

Attachments: 1. Ordinance

RECOMMENDATION

Staff recommends that the City Council adopt the 2010 edition of the California Building Standards technical codes including the local amendments by taking the following actions:

1. Resume the public hearing from the November 30, 2010 City Council meeting.

2. Adopt the proposed ordinance through a second reading.

INTRODUCTION

Every three years the California Building Standards Commission ("Commission") publishes the California Building Standards Code or technical codes. The California Building Standards Code is a compilation of the building standards that apply to all occupancies in California. It includes the Building, Residential, Mechanical, Plumbing, Energy, Electrical, Fire, Historical Building, Existing Building, Reference Standards and *CALGreen* codes), among others. The frequency of the adoptions keeps the technical codes current with the latest health and safety standards. After review and input by various state agencies and other interested parties, public hearings are held by the Commission. The Commission ultimately adopts and publishes the selected model codes, becoming effective 180 days after publication.

The attached Ordinance provides for the adoption of the latest edition of the California Building Standards Code, re-adopts many of the City amendments currently in place, adopts the 2009 Uniform Swimming Pool, Spa & Hot Tub Code, 2009 International Property Maintenance Code, and 2010 Beverly Hills Solar Photovoltaic Installation Guidelines. In 2010, the Commission adopted two new model code documents titled the *2010 Green Building Standards Code (CALGreen)* and the *2010 California Residential Code*. These two new codes have been reviewed and amended by staff in an effort to be consistent with existing local amendments. The proposed ordinance also adds additional administrative and seismic provisions, and deletes existing amendments addressed by the new model codes.

On November 16th, 2010 a Public Hearing was conducted for the adoption of the proposed ordinance. During the hearing, staff requested and received direction regarding a Planning Commission recommendation to not mandate solar photovoltaics for single-family dwellings. The City Council agreed with the Planning Commission's recommendation and directed staff to remove this requirement for single-family homes. In addition, a question was raised regarding fire sprinkler requirements in Ambulatory Health Care Facilities (outpatient surgery centers) and it was pointed out that there appeared to be a clerical error in that same section of the code. Staff recommended that the City Council continue the hearing to November 30, 2010, so that staff can review the issues raised at the November 16th hearing.

Staff undertook its review and made the necessary revision to the ordinance to omit the solar photovoltaic requirement for single-family dwellings. In addition, staff clarified the fire sprinkler requirements so that it would be consistent with our current requirements. Last, staff made some other non-substantive clarifications to the ordinance.

As stated above, the California Building Standards Code becomes effective within 180 days following publication of those codes by the State (in this case January 1, 2011). The California Health and Safety Code, however, allows cities to amend the Building Standards Code when deemed necessary and reasonable due to local climatic, geological, or topographical conditions. Findings for each amendment must be established and filed with the Building Standards Commission to be enforceable. A Resolution containing these findings is attached for the City Council's consideration.

On November 30, 2010 a Public Hearing was conducted and public testimony was heard. Upon deliberation, the City Council adopted an urgency ordinance and resolution of findings with the codes becoming effective on January 1, 2011. This was done so that

local amendments would not be lost during the time it takes for the regular ordinance to become effective.

Additionally, a first reading of the permanent ordinance was read with the public hearing continued to this evening.

DISCUSSION

After the Public Hearing commenced on November 16, 2010, staff made the following changes to the ordinance:

1. Eliminated the requirement to mandate solar photovoltaics on single family homes.
2. Clarified and corrected language pertaining to fire sprinkler requirements which are consistent with current local standards.
3. Added fire sprinkler requirements for new Ambulatory Health Care Facilities in existing buildings.
4. Made non-substantiated changes to correct clerical errors.

Green Building Code (*CALGreen*)

CALGreen is the Nation's first statewide green building code. The intent of *CALGreen* is to establish sustainable development as a minimum standard for all new construction in California. *CALGreen* is a required sustainable element based system as opposed to the City's existing point based Green Building Program or other private rating systems such as Leadership in Energy and Environmental Design (LEED). Both programs incorporate similar sustainable concepts as shown in the following table and are consistent with AB 32 (California Global Warming Solutions Act) and other State sustainability programs.

BH-Green Building	**CALGreen**
Sustainable Sites	Planning & Design
Water Efficiency	Energy Efficiency
Energy & Atmosphere	Water Efficiency & Conservation
Materials & Resources	Material Conservation & Resource Efficiency
Indoor Environmental Quality	Environmental Quality
Innovation & Design Process	Alternative Means and Methods

Mandating a green building code on a statewide level is the first step in establishing a common baseline. *CALGreen* does provide additional voluntary measures (Tier 1 and Tier 2) allowing local jurisdictions the opportunity to be more restrictive; however, to be enforceable, findings must be made and filed with the State. Furthermore, an effort is underway by the International Code Council, publishers of the State Code, to develop an International Green Building Code to be modeled throughout the rest of the country. To provide an analogy, a similar approach was undertaken on a different set of building standards in the 1980's when disabled access laws were first established in California, with the nation ultimately following.

In 2008, the City adopted a mandatory Green Building Program for multi-family and commercial properties and a voluntary program for single family homes. The commercial and multi-family standards mimicked the latest Leadership in Energy and Environmental Design (LEED), version 2.2, in place at that time. However, the LEED

checklist has been updated since 2008, so the program's checklist is outdated. There is not an exact correlation between LEED and *CALGreen* and the approach to sustainability is in some cases different, so an exact equivalence of the two systems is not possible. Staff has amended the *CALGreen Code* by incorporating the current mandatory commercial and multi-family Green Building requirements and has determined that the objectives to achieve sustainability are equal.

Following the direction given when the Beverly Hills Green Program went into effect, staff recommends that the CALGreen tiered elements be required for larger commercial and multi-family buildings to be more sustainable. Staff recommends that buildings larger than 25,000 square feet comply with *CALGreen's* Tier 1 requirements. However, for unique projects 50,000 square feet or greater that involve a General Plan Amendment or Development Agreement, staff further recommends more stringent sustainable elements identified in *CALGreen's* Tier 2 standards become a requirement to further reduce the development impact on the environment.

The existing Beverly Hills voluntary Single-Family Residential Green Building Program is recommended to be replaced by *CALGreen's* mandatory standards and incorporate the Beverly Hills voluntary program components, such as solar photovoltaics (PV), and 15% greater energy efficiency.

Additionally, in anticipation of new technologies such as plug-in battery electric vehicles and plug-in hybrids, the proposed ordinance includes requirements for new buildings to be "electric vehicle ready" including space in electric panels and empty conduits to parking spaces which would allow for a simple inexpensive installation when a property owner purchases an electric vehicle.

With these amendments, staff recommends the proposed ordinance replace the Green Building Program Ordinance 08-O-2555 and Resolution 08-R-12609, and the Voluntary Residential Green Building Program for Single Family Residences, Resolution 08-R-12632. This recommendation is made to reduce the confusion in similar but different green building standards that share the City and State's sustainability goals. In order to accomplish this, staff is bringing forward Item E-2A this evening proposing the repeal of the City's current green building requirements in the zoning code (Title 10, Chapter 3, Article 46).

Other Code Issues

The California Residential Code regulates the building standards for one and two family dwellings, and townhomes up to three stories in height. The State code has been amended to address local conditions.

The adoption Ordinance includes the 2009 International Property Maintenance Code which provides additional property maintenance standards. The 2010 Beverly Hills Solar Photovoltaic Installation Guidelines establish standards that provide added safety for Fire Department personnel.

A new code amendment is proposed to the Uniform Administrative Code establishing maximum construction timelines. This amendment is proposed in response to numerous complaints the City receives from residents over "never-ending" construction projects. This code amendment requires a construction management plan to be provided, which

includes construction milestones, and total time of construction. Additionally, it provides another tool to allow the City to mitigate unsafe or abandoned construction projects.

Lastly, the new code editions numbering system required the revision of various existing municipal code amendments in order to correspond with the new code format. Thus, some of the City's existing amendments are re-adopted under a new numbering system.

FISCAL IMPACT

The costs of code books and staff training have been incorporated within our current budget with no additional financial impact anticipated to administer the new code. However, the initial cost of construction will likely rise as a result of the State mandated green building code with long-term sustainable and economic benefits expected over the life of the building.

FOR TJS

Approved By
Tim Scranton, Fire Chief

Approved By
Susan Healy Keene, AICP
Director of Community Development

Attachment 1

ORDINANCE NO. _____

AN ORDINANCE OF THE CITY OF BEVERLY HILLS AMENDING THE UNIFORM ADMINISTRATIVE CODE, 1997 EDITION AND ADOPTING BY REFERENCE THE 2010 CALIFORNIA BUILDING CODE; THE 2010 CALIFORNIA RESIDENTIAL CODE; THE 2010 CALIFORNIA ELECTRICAL CODE; THE 2010 CALIFORNIA MECHANICAL CODE; THE 2010 CALIFORNIA PLUMBING CODE; THE UNIFORM SWIMMING POOL, SPA AND HOT TUB CODE, 2009 EDITION; THE CALIFORNIA ENERGY CODE, 2010 EDITION; THE 2010 CALIFORNIA FIRE CODE; THE CALIFORNIA GREEN BUILDING STANDARDS CODE, 2010 EDITION; THE 2010 CALIFORNIA HISTORICAL BUILDING CODE; THE 2010 CALIFORNIA EXISTING BUILDING CODE; THE 2010 CALIFORNIA REFERENCE STANDARDS CODE; THE INTERNATIONAL PROPERTY MAINTENANCE CODE, 2009 EDITION; THE BEVERLY HILLS PHOTOVOLTAIC INSTALLATION GUIDELINES, 2010 EDITION; INCLUDING CERTAIN AMENDMENTS, ADDITIONS, AND DELETIONS; AND AMENDING PORTIONS OF TITLE 9 OF THE BEVERLY HILLS MUNICIPAL CODE

THE CITY COUNCIL OF THE CITY OF BEVERLY HILLS DOES ORDAIN AS FOLLOWS:

Section 1. Section 9-1-104 of Article 1 of Chapter 1 of Title 9 of the Beverly Hills Municipal Code is hereby amended by the addition of Sections 201.2.1, 303.4.1 and 305.4.1 to the Uniform Administrative Code, adopted pursuant to Section 9-1-103, as follows:

"Section 201.2.1 is hereby added to the Uniform Administrative Code to read as follows:

201.2.1 Fire official. Whenever the term or title 'building official' or other similar designation is used herein, it shall be construed to mean the Fire Official designated by the appointing authority of this jurisdiction, as applicable in enforcing the administrative code as it pertains to the California Fire Code.

Exception: The city appointed fire official shall not have the power and duties of a building official as it relates to the enforcement of technical codes directly under the purview as established by California Health and Safety Code, except the California Fire Code. Specifically sections 202, 204, 301, 305.5, 306, 307, and 309 shall not apply to the Fire Official."

"Section 303.4.1 is added to the Uniform Administrative Code to read as follows:

303.4.1 Special building permit requirements. Prior to issuance of a building permit for a project requiring plan check, the owner shall prepare and submit a construction management plan (CMP) for all work, using a form provided by the City Building Official, or otherwise found acceptable by the City Building Official. The CMP shall set forth construction inspection milestones to be timely completed, that shall correspond to progress inspections required by the City's Technical Codes. If the CMP is approved, work may be commenced and shall comply in all respects with time limits set forth in the CMP. The total time within which to complete construction, as set forth in the CMP, shall not exceed three (3) years unless approved in writing by the City Building Official.

Prior to issuance of a building permit, the owner shall also post a safety deposit with an approved local financial institution ('Safety Deposit') in such amount as determined by the City Building Official based upon the potential need for imposition by the City of safety measures on the project site, capable of being unilaterally drawn upon by the City in the event construction ceases and/or an inspection milestone is missed. The Safety Deposit shall be in the form of cash or structured letter of credit satisfactory to the City Attorney, and shall be used solely to procure construction site security fencing, removal of construction site solid waste, maintenance of landscaping, including lawns and parkways, and/or remediation of any other conditions determined by the City Building Official to be unsafe, after the owner's refusal or failure to correct such condition(s). The owner shall deposit additional funds within five (5) business days of

City's withdrawal, sufficient to maintain the required Safety Deposit amount at all times during the course of the work, until final inspection and issuance of a Certificate of Occupancy, if applicable.

Any failure by the owner to meet a CMP inspection milestone shall authorize the City Building Official to issue a notice requiring completion of the work and corresponding inspection within thirty (30) days ('Completion Notice'). Notwithstanding the foregoing, the City Building Official shall be authorized as otherwise provided under the Uniform Administrative Code, California Building Code, or any other provision of local or State law, to issue written orders requiring the immediate correction of any condition deemed to present an immediate and unreasonable risk of harm or danger to the public health and safety ('Safety Order'). The Building Official shall be authorized to utilize the Safety Deposit, consistent with the procedures set forth in this section, to implement measures to protect the public from any immediate and unreasonable risk of harm or danger on the project site, if the owner fails or refuses to timely comply with the Safety Order.

Every permit issued by the City Building Official shall expire and become null and void if the building or work authorized by such permit, including the inspection milestone, is not completed, or the Safety Deposit is not made, prior to the expiration of the thirty (30) day period specified in the Completion Notice. In the event a permit expires, a stop work order may be issued, and the owner shall apply for, pay all new permit fees, submit a new CMP, and obtain a new permit before recommencing the work.

Prior to withdrawing funds from the Safety Deposit, the owner shall be provided ten (10) days prior written notice within which the owner may file a written appeal of the pending fund withdrawal. If no appeal is filed within said ten (10) day period, the City may withdraw funds in the amount stated in the notice. If an appeal is timely filed, then an informal hearing shall be scheduled to occur before a hearing officer who shall be appointed by the City Manager or designee and who shall be any person having no involvement with the determination to withdraw funds from the Safety Deposit. The owner shall be provided notice of the hearing which shall be set to occur not later than fourteen (14) days after receipt of the timely appeal. Prior to or at the hearing on the appeal, the owner shall submit (a) documentary evidence sufficient to establish that: all permit applications were timely filed; construction contracts were entered into in a diligent manner; compliance with all permit requirements occurred in a timely manner; and that all fees were timely paid; and (b) any other evidence demonstrating that construction delays, including any failure to comply with a Safety Order, resulted from circumstances beyond the owner's reasonable control and despite diligent and clearly documented efforts to achieve timely compliance.

Following the conclusion of the hearing, and based upon substantial evidence presented, the hearing officer shall be authorized to make any of the following determinations:

a. The owner shall be provided with up to thirty additional days within which to complete the work and required inspection;

b. Modify the determination to withdraw funds by authorizing a lesser amount to be withdrawn; or

c. Deny the appeal in its entirety.

The decision of the hearing officer shall be final

A failure or refusal by an owner to make or fund a required Safety Deposit and/or allow any work of construction to remain in an unsafe condition as determined by the Building Official, or in unfinished condition beyond the time limits set forth in this section or a CMP, shall constitute a nuisance and may be abated as provided for the abatement of nuisances in the Beverly Hills Municipal Code.

In addition to the rights granted to the City Building Official pursuant to Section 202.3 of the Uniform Administrative Code, and consistent with the provisions of said section, the City Building Official shall have all rights to enter the property to inspect, mitigate unsafe conditions including boarding up of openings, abate unsafe weeds, remove unsafe construction materials and demolition waste, demolish

unsafe structures, and otherwise to enforce any of the provisions of this section or Title 9 of the Beverly Hills Municipal Code."

"Section 305.4.1 of the Uniform Administrative Code is added to read as follows:

305.4.1 Preliminary inspection. Before issuing a *permit,* the *building official* is authorized to examine or cause to be examined buildings, structures and sites for which an application has been filed."

Section 2. Section 9-1-104 of Article 1 of Chapter 1 of Title 9 of the Beverly Hills Municipal Code is further amended by amending Sections 302.1, 302.3, 305.3, 305.5, and 309.2 of the Uniform Administrative Code, as adopted pursuant to Section 9-1-103, and Sections 102.6, 103, 302.2.4, 302.8, 303.2, 303.4, 304.2, 305.2, 305.9, 306.1, 306.3, and 307 of the Uniform Administrative Code, as adopted pursuant to Section 9-1-103 and amended pursuant to Section 9-1-104, as follows:

"Section 102.6 of the Uniform Administrative Code is hereby amended to read as follows:

102.6 Moved Buildings. It shall be unlawful for any person to move a building or structure into, onto or out of the City without first obtaining a permit from the Director of Building and Safety. The permit fee shall be established by City Council Resolution. In addition to the applicable requirements specified in Paragraph 2 Section 102.9, the permittee shall comply with the following:

1) The necessary permits for moving the building or structure across public property shall be obtained in accordance with Article 7, Chapter 3, Title 4.
2) Before a permit is issued, the applicant may be required to post a bond in accordance with Section 102.10.
3) Compliance with the requirements of this article shall not relieve anyone from any other applicable requirements of this Code, including, but not limited to, the provisions of Article 7 of Chapter 3 of Title 4 regulating the moving of buildings on or across public streets.
4) The property owner or the owner's representative shall post at the construction site a notice of intent to move a building that is readily visible at least ten (10) days prior to issuance of permit whenever the Director of Building and Safety determines that the grading, demolition, or construction work will have a significant impact on the surrounding properties.

Building and Safety shall furnish the sign for notice of intent to do grading, construction, or demolition. Failure to comply with the requirements of this article shall be cause for the City to engage the necessary services or facilities to accomplish the intent of this article, and the City shall charge the owner of the lot or parcel of land for all costs so incurred by the City."

"Section 103 of the Uniform Administrative Code is hereby amended by amending the definition of 'Building Official' to read as follows:

BUILDING OFFICIAL is the officer of other designated authority charged with the administration and enforcement of this code, or a regularly authorized deputy. Used herein, the term Director of Building and Safety, or his or her designee, shall be construed to mean the Building official.

Whenever the term or title "building official" or other similar designation is used herein, it shall be construed to mean the Fire Official designated by the appointing authority of this jurisdiction, as applicable in enforcing the administrative code as it pertains to the California Fire Code.

Exception: The city appointed fire official shall not have the power and duties of a building official as it relates to the enforcement of technical codes directly under the purview as established by California Health and Safety Code, except the California Fire Code. Specifically sections 202, 204, 301, 305.5, 306, 307, and 309 shall not apply to the Fire Official."

"Section 302.1 of the Uniform Administrative Code is amended to read as follows:

302.1 Application. To obtain a permit, the applicant shall first file an application on a form furnished by the city for that purpose. Every such application shall:

1. Identify and describe the work to be covered by the permit for which application is made.
2. Describe the land on which the proposed work is to be done by legal description, street address or similar description that will readily identify and definitely locate the proposed building or work.
3. Indicate the use or occupancy for which the proposed work is intended.
4. Be accompanied by plans, diagrams, computations, and specifications, and other data as required in Section 302.2.
5. State the valuation of any new building or structure or any addition, remodeling or alteration to an existing building.
6. Be signed by the applicant, or the applicant's authorized agent.
7. Give such other data and information as may be required by the building official."

"Section 302.2.4 of the Uniform Administrative Code is amended to read as follows:

302.2.4 Relocation Plan.
If the construction means and method plan demonstrates, as determined by the building official, that the work being performed on the property may require that tenants be temporarily relocated, the applicant shall also prepare and submit a relocation plan for city approval prior to issuance of a permit which shall contain facts sufficient to show that:

(a). Fair and reasonable relocation benefits will be provided to all displaced tenants as required;

1. A mutual agreement between the landlord and tenant to be impacted by construction will be an acceptable method of complying with the relocation plan requirements; or
2. A reasonable relocation plans which demonstrates the following:
    i. Relocation facilities shall be located within the City of Beverly Hills.
    ii. Relocation facilities shall provide equal accommodations to include, but not be limited to, laundry facilities, exercise facilities, balconies, kitchens, pet housing/care, and parking.
    iii. Storage facilities required to temporarily store tenant's personal belongings during the period of construction shall be provided by landlord. For the security of personal belongings, storage shall be independent from other relocated tenant's property.
    iv. Moving expenses and costs shall be incorporated into the relocation plan.

(b) Notice of the relocation assistance and benefits to be provided and the timing of the displacement will be provided to all displaced tenants."

"Section 302.3 of the Uniform Administrative Code is amended to read as follows:

302.3 Information on Plans and Specifications. Plans and specifications shall be drawn to scale on substantial paper or in digital format deemed acceptable by the building official and shall be of sufficient clarity to indicate the location, nature and extent of the work proposed and show in detail that it will conform to the provisions of this code and all relevant laws, ordinances, rules and regulations.

Plans for buildings of other than Group R, Division 3 and Group U Occupancies shall indicate how required structural and fire-resistive integrity will be maintained where penetrations will be made for electrical, mechanical, plumbing, and communication conduits, pipes and similar systems."

"Section 302.8 of the Uniform Administrative Code is amended to read as follows:

302.8 Construction Parking and Hauling Restrictions. No hauling or construction-related parking shall be permitted on a public street except as otherwise approved by the building official and city engineer, provided that the work described in an application for a permit, and the plans, specifications and other data filed therewith, conform to the requirements of this code, the technical codes and other pertinent

laws and ordinances, and that the fees specified by resolution of the city council in section 304 have been paid. All hauling related to construction shall not be commenced without hauling permits."

"Section 303.2 of the Uniform Administrative Code is amended to read as follows:

303.2 Retention of Plans. One set of approved plans, specifications and computations shall be submitted by the applicant, and retained by the City, in a digital format deemed acceptable by the building official and as outlined in the city's retention schedule; and one set of approved plans and specifications shall be returned to the applicant, and shall be kept on the site of the building or work at all times during which the work authorized thereby is in progress."

"Section 303.4 of the Uniform Administrative Code is amended to read as follows:

303.4 Expiration. Every permit issued by the building official under the provisions of the technical codes, that does not require plan check, shall expire by limitation and become null and void, if the building or work authorized by such permit is not commenced within 180 days from the date of such permit, or if the building or work authorized by such permit is suspended or abandoned at any time after the work is commenced for a period of 180 days. Before such work can be recommenced, a new permit shall be first obtained to do so, and the fee therefor shall be one half the amount required for a new permit for such work, provided no changes have been made or will be made in the original plans and specifications for such work; and provided further that such suspension or abandonment has not exceeded one year. In order to renew action on a permit after expiration, the permittee shall pay a new full permit fee.

A permittee holding an unexpired permit for work not requiring plan check may apply for an extension of the time within which work may commence under that permit when the permittee is unable to commence work within the time required by this section for good and satisfactory reasons. The building official may extend the time for action by the permittee for a period not exceeding 180 days upon written request by the permittee showing that circumstances beyond the control of the permittee have prevented action from being taken. Permits shall not be extended more than once.

Every building permit requiring plan check shall comply with section 303.4.1."

"Section 304.2 of the Uniform Administrative Code is amended to read as follows:

304.2 Permit Fees. The permit fees and fees for extensions of permits shall be established by state or local agencies or by resolution of the city council.

The determination of value or valuation under any of the provisions of these codes shall be made by the building official. The value to the be used in computing the permit and plan review fees shall be the total value of all construction work for which the permit is issued as well as all finish work, painting, roofing, electrical, plumbing, heating, air-conditioning, elevators, fire-extinguishing systems and other permanent equipment.

In addition to the permit fees, if buildings or structures are required to meet green building standards, energy, sound insulation and/or seismic zone standards as mandated by the state, then the building official shall collect a fee in the amount established by state or local agencies or by resolution of the city council.

For each and every permit issued pursuant to Title 24, California Building Standards there shall be paid to the City a permit for in such amount as established by resolution of the City Council."

"Section 305.2 of the Uniform Administrative Code is amended to read as follows:

305.2 Inspection Record. Work requiring a permit shall not be commenced until the permit holder or the agent of the permit holder shall have posted in a conspicuous place at the construction site a permit and inspection record such as to the allow the building official conveniently to make the required entries

regarding inspection of the work. The permit shall be posted in a location such that it is visible from the street. The permit and plans shall remain readily available on site until final approval has been granted by the building official.

The requirements for posting and location of posting may be waived or modified by the building official as deemed necessary for the particular type of work.

Duplicate inspection cards may be issued upon payment of fees as established by city council resolution."

"Section 305.3 of the Uniform Administrative Code is amended to read as follows:

305.3 Inspection Requests. It shall be the duty of the person doing the work authorized by a permit to notify the building official that such work is ready for inspection. The building official may require that every request for inspection be filed at least one business day before such inspection is desired. Such requests shall be made in a manner deemed acceptable by the building official.

It shall be the duty of the person requesting any inspections required either by this code or the technical codes to provide access to and means for inspection of the work."

"Section 305.5 of the Uniform Administrative Code is amended to read as follows:

305.5 Required Building Inspections. Reinforcing steel or structural framework of a part of a building or structure shall not be covered or concealed without first obtaining the approval of the building official. Protection of joints and penetrations in fire-resistive assemblies shall not be concealed from view until inspected and approved.
The building official, upon notification, shall make the following inspections:

1. **Demolition inspection.** To be made before demolition begins and after demolition is completed per approved plans but before construction, grading, or shoring is commenced.
2. **Shoring & excavation**. To be made throughout and after shoring and excavations are complete and required before foundations are in place.
3. **Basement & subterranean garage**. To be made throughout and after the basement & subterranean footings and walls are in place.
4. **Footings & foundation inspection**. To be made after excavations for footings are complete and required reinforcing steel is in place. For concrete foundations, required forms shall be in place prior to inspection. All materials for the foundation shall be on the job, except when concrete is ready-mixed in accordance with approved I nationally recognized standards, the concrete need not be on the job. When the foundation is to be constructed of approved treated wood, additional inspections may be required by the building official.
5. **Concrete slab or under-floor inspection**. To be made after in-slab or under-floor building service equipment, conduit, piping accessories and other ancillary equipment items are in place but before any concrete is placed or floor sheathing installed, including the subfloor.
6. **Lowest floor elevation.** In flood hazard areas, upon placement of the lowest floor, including the basement, and prior to further vertical construction, the elevation certification required in Section 1612.5 shall be submitted to the *building official.*
7. **Trades (plumbing, mechanical, gas and electrical systems) inspection.** Rough inspection of plumbing, mechanical, gas and electrical systems shall be made prior to covering or concealment, before fixtures or *appliances* are set or installed, and prior to framing inspection.
8. **Rough frame inspection**. To be made after the roof, framing, fire blocking and bracing are in place and all pipes, chimneys and vents are complete and the rough electrical, plumbing, and heating wires, pipes and ducts are approved.
9. **Fire- and smoke-resistant penetrations.** Protection of joints and penetrations in fire-resistance-rated assemblies, *smoke barriers* and smoke partitions shall not be concealed from view until inspected and *approved.*
10. **Weather proofing.** To be made after exterior lathing, roofing, and other weather protection materials are in place but before plaster is applied.

11. **Lath and/or wallboard inspection.** To be made after lathing and wallboard, interior and exterior, is in place but before plaster is applied or before wallboard joints and fasteners are taped and finished.
12. **Energy compliance inspection.** To be made before work is concealed or made inaccessible based at the point in time when adequate stages of construction for the selected method of code compliance. Inspections shall be made to determine compliance with California Energy Code and shall include, but not be limited to, inspections for: envelope insulation R- and U-values, fenestration U-value, duct system R-value, and HVAC and water-heating equipment efficiency.
13. **Green building standards inspection.** To be made before work is concealed or made inaccessible based at the point in time when adequate stages of construction for the selected method of code compliance. Inspections shall be made to determine compliance with California Green Building Standards Code and shall include, but not be limited to, inspections for: envelope, site, parking, solar panel, energy, irrigations, landscaping, and materials.
14. **Site Grading / Landscaping.** To be made before work is concealed or made inaccessible. Underground irrigation system shall be inspected before landscaping is installed.
15. **Final inspection**. To be made after finish grading and the building is completed and ready for occupancy."

"Section 305.9 of the Uniform Administrative Code is amended to read as follows:

305.9 Required Inspections And Tests.

1. A pre-construction meeting with the city and the project personnel will be required prior to beginning any new building or when required by the city.
2. For all new construction and when required by the city, a licensed surveyor must certify that the location of the footing forms is per the approved plans before foundations can be poured. The surveyor must provide a plot plan showing precise dimensions to the property lines and the elevation of the forms as compared with the reference elevation shown on the approved plans.
3. For all new construction and when required by the city, a licensed surveyor must certify that the height of the building is in accordance with the approved plans. The surveyor must show the precise height of the building as compared with the reference elevation shown on the approved plans.
4. An approved weatherproofing consultant must certify the installation of weatherproofing on all retaining walls which are adjacent to interior areas of the building. The consultant will not be required if the installer is certified in writing by the manufacturer.
5. For all new construction and when required by the city, an approved weatherproofing consultant must certify that the weatherproofing elements of the building have been installed in accordance with the approved plans, all relevant codes, and per manufacturers specifications. At a minimum, an inspection and report will be required before plastering begins and before final approval is granted.
6. Prior to final approval, a certified air balancer must provide a written report showing the air volumes for all elements of a commercial garage exhaust system or a commercial kitchen hood system.
7. Prior to final approval, the city must witness a test of all fire smoke dampers.
8. Prior to rough framing inspection approval, and prior to final inspection approval, the city may verify conformity with applicable entitlements and zoning regulations."

"Section 306.1 of the Uniform Administrative Code is hereby amended as follows:

306.1 General. In addition to the inspections required by section 305, the owner, the engineer, the architect, or the person acting as the owner's agent shall employ one or more special inspectors who will provide inspections during construction as required in California Building Code, Chapter 17.

EXCEPTION: The building official may waive the requirement for the employment of a special inspector if the construction is of a minor nature."

"Section 306.3 of the Uniform Administrative Code is hereby amended to read as follows:

Section 306.3 Duties and Responsibilities of the Special Inspector.
The special inspector shall observe the work assigned for conformance with the approved design drawings and specifications.

The special inspector shall furnish inspection reports to the building official, the engineer or architect of record, and other designated persons. Discrepancies shall be brought to the immediate attention of the contractor for correction, then, if uncorrected, to the proper design authority and to the building official.

The special inspector shall submit a final signed report stating whether the work requiring special inspection was, to the best of the inspector's knowledge, in conformance with the approved plans and specifications and the applicable workmanship provision of these codes.

The special inspector employed on any work must be present during the prosecution of all the work the inspector has undertaken to inspect. The inspector shall notify the department of his or her commencement of inspection of a job and shall specify the type of inspection for which the inspector has been engaged. This notification shall be made not later than the last working day preceding such commencement of inspection. The inspector shall report to the job sufficiently in advance of construction to become familiar with the plans and to inspect all materials to be used or concealed within such work; the inspector shall inspect the construction, erection, placing or other use of such materials; and the inspector shall observe whether there is compliance with the applicable codes as to all of the foregoing. During the prosecution of the work, the inspector shall not undertake or engage in any other task or occupation which will interfere with the proper performance of his or her duties of inspection. The inspector shall report, as directed, to the director of building and safety, noting all violations of the applicable codes, which have occurred, and such other information as may be required. At the conclusion of his or her duties, on any project, which has been completed in accordance with this code, the inspector shall submit a report to the department setting forth the portion of the work the inspector inspected. The report shall be made on forms supplied by the department and shall be filed in the records of the department.

Nothing herein shall be deemed to authorize any special inspector to approve the placing of concrete, grout, masonry, or structural steel prior to the approval of the regular city building inspector.

Where, in the opinion of the department, the special inspector is negligent in the performance of the inspector's duties, the job shall be stopped until such time as the negligence is corrected and adequate inspection has been performed."

"Section 307 of the Uniform Administrative Code is hereby amended to read as follows:

SECTION 307 STRUCTURAL OBSERVATION

Structural observation shall be provided in seismic design category D, E, or F as indicated in section 1710 of the California Building Code."

"Section 309.2 of the Uniform Administrative Code is amended to read as follows:

309.2 Change in Use. Changes in the character or use of a building shall not be made except as specified in the California Building Code and the California Residential Code."

Section 3. Section 9-1-201 of Article 2 of Chapter 1 of Title 9 of the Beverly Hills Municipal Code is hereby repealed, provided, however, that such repeal shall not affect or excuse any violation of said Section occurring prior to the effective date of this ordinance. New Section 9-1-201 is hereby added to Article 2 of Chapter 1 of Title 9 of the Beverly Hills Municipal Code to read as follows:

"9-1-201: ADOPTION OF CALIFORNIA BUILDING CODE: The 2010 edition of the California Building Code, excluding all appendices except G and J, is hereby adopted by reference, subject to the amendments set forth in Section 9-1-202."

Section 4. Sections 9-1-202 and 9-1-203 of Article 2 of Chapter 1 of Title 9 of the Beverly Hills Municipal Code are hereby repealed, provided, however, that such repeal shall not affect or excuse any violation of said Sections occurring prior to the effective date of this ordinance. Section 9-1-204 "Model Massing Fee" of Article 2 of Chapter 1 of Title 9 of the Beverly Hills Municipal Code is hereby renumbered as Section 9-1-203. New Section 9-1-202 is hereby added to Article 2 of Chapter 1 of Title 9 of the Beverly Hills Municipal Code to read as follows:

9-1-202: AMENDMENTS TO CALIFORNIA BUILDING CODE:

The California Building Code adopted pursuant to Section 9-1-201 is hereby amended as follows:

"Section 1.1.1 of the California Building Code is amended to read as follows:

1.1.1 Title. These regulations shall be known as the California Building Code, may be cited as such and will be referred to herein as "this code." The California Building Code is Part 2 of twelve parts of the official compilation and publication of the adoption amendment and repeal of building regulations to the California Code of Regulations, Title 24, also referred to as the California Building Standards Code. This part incorporates by adoption the 2009 International Building Code of the International Code Council with necessary California amendments.

For the city of Beverly Hills, these regulations shall be known as the Beverly Hills building code. The provisions contained in the California building code of the (compiled) California building standards code as defined in section 18910, Health and Safety Code, may be cited as such and are referred to hereafter as "these regulations" or "these building standards" or "this code". These regulations shall also be collectively known as the "California Building Code" as amended by the Beverly Hills Municipal Code."

"Section 501.2 of the California Building Code is amended to read as follows:

501.2 Address identification. New and existing buildings shall be provided with *approved* address numbers or letters. Each character shall be a minimum 4 inches (102mm) high for residential properties and a minimum of 6 inches high for non-residential properties with a minimum stroke width of 0.5 inch (12.7mm) wide. They shall be installed on a contrasting background and be plainly visible from the street or road fronting the property. Where access is by means of a private road and the building address cannot be viewed from the *public* way, a monument, pole or other approved sign or means shall be used to identify the structure.

501.2.1 Street Numbering. The following provisions shall be applicable to street numbering:

1. On the east-west axis, all numbers shall sequence, as much as practicable, with the contiguous east-west streets abutting Los Angeles city and County.
2. On the north-south axis, streets north of Wilshire Boulevard shall be designated with the prefix "North," and streets south of Wilshire Boulevard shall be designated with the prefix "South."
3. Numbers on the northerly and westerly sides of all streets shall end in an odd digit, while numbers on the southerly and easterly sides shall end in an even digit.
4. The city building official shall designate street address numbers, and shall maintain on file a map entitled "Official Numbering Map Of The City Of Beverly Hills" which shall depict the official designation of the numbers assigned to property fronting on the various streets in the city.

501.2.2 Building Numbering Requirements. The entrances to all buildings from public streets shall have the numbers designated by the city building official conspicuously displayed near the entrance of the structure in a manner that they are in plain view from the street. Structures which have access from a rear alley, in addition to the numbering required by this section, shall for purposes of emergency response, provide numbering and street identification which is clearly visible from the rear alley access in accordance with the following provisions:

1. The name of the street and street number as designated by the city building official shall be visible from the alley and located adjacent to the alley access to the structure.

2. The address markings shall be placed five (5') feet above the alley surface, with numbers four (4") inches in height and letters two (2") inches in height, and placed upon the structure, wall, fence, gate, or other appropriate surface so as to be clearly visible.
3. If any property owner shall fail to provide the address identification required by this subsection on the premises, the city may provide and affix such address identification markings at no cost to the property owner. Where identification markings are provided by the city, no person shall remove, deface, or modify such markings without the written authorization of the city building official.

501.2.3 Diagram Required For Six Or More Dwelling Units. Where a building or building complex contains six (6) or more separate dwelling units, a description diagram indicating the identification pattern and location of each dwelling unit shall be posted in a conspicuous manner at the primary entrance of such building or buildings. This requirement of this section shall be included in any building plans submitted for plan check.

501.2.4 Prohibition against Placing Numbers On Streets, Sidewalks, Or Curbs Or Displaying Improper Building Numbers. No person shall place, maintain, or cause any number, figure, letter, carving, drawing, design, or other marking upon, or paint, any street, sidewalk, or curb in the city, except as authorized by the city. No person shall place, maintain, or display any address identification number other than as designated by the city building official."

"Section 704A.3 of the California Building Code is amended to read as follows:

704A.3 Alternative methods for determining ignition-resistant material. Anyone of the following shall be accepted as meeting the definition of ignition-resistant material:

1. Noncombustible material. Material that complies with the definition for noncombustible materials in Section 202.
2. Fire-retardant-treated wood. Fire-retardant-treated wood identified for exterior use that complies with the requirements of Section 2303.2."

"Section 707A.3 of the California Building Code is amended to read as follows:

707A.3 Exterior walls. The exterior wall covering or wall assembly shall comply with one of the following requirements:

1. Noncombustible material
2. Ignition-resistant material
3. Heavy timber exterior wall assembly
4. Log wall construction assembly
5. All non-wood wall assemblies that meet the performance criteria in accordance with the test procedures for a 10-minute direct flame contact exposure test set forth in SFM Standard 12-7A-1

Exception: Any of the following shall be deemed to meet the assembly performance criteria and intent of this section:

1. One layer of 5/8-inch Type X gypsum sheathing applied behind the exterior covering in compliance with the State Fire Marshal Standard 12-7A-1 as listed in the Cal-Fire Wildland Urban Interface (WUI) Product – Building Material Listing Program installed on the exterior side of the framing.
2. The exterior portion of a 1-hour fire resistive exterior wall assembly designed for exterior fire exposure including assemblies using the gypsum panel and sheathing products listed in the Gypsum Association Fire Resistance Design Manual.

707A.3.1 Extent of exterior wall covering. Exterior wall coverings shall extend from the top of the foundation to the roof, and terminate at 2 inch (50.8 mm) nominal solid wood blocking between rafters at all roof overhangs, or in the case of enclosed eaves, terminate at the enclosure."

"Section 707A.4 of the California Building Code is amended to read as follows:

707A.4 Open roof eaves. The exposed roof deck on the underside of unenclosed roof eaves shall consist of one of the following:

1. Noncombustible material
2. Ignition-resistant material
3. One layer of 5/8-inch Type X gypsum sheathing applied behind an exterior covering in compliance with the State Fire Marshal Standard 12-7A-3 as listed in the Cal-Fire Wildland Urban Interface (WUI) Product – Building Material Listing Program installed on the underside exterior of the roof deck
4. The exterior portion of a 1-hour fire resistive exterior wall assembly applied to the underside of the roof deck designed for exterior fire exposure including assemblies using the gypsum panel and sheathing products listed in the Gypsum Association Fire Resistance Design Manual."

"Section 707A.5 of the California Building Code is amended to read as follows:

707A.5 Enclosed roof eaves and roof eave soffits. The exposed underside of enclosed roof eaves having either a boxed-in roof eave soffit with a horizontal underside, or sloping rafter tails with an exterior covering applied to the underside of the rafter tails, shall be protected by one of the following:

1. Noncombustible material
2. Ignition-resistant material
3. One layer of 5/8-inch Type X gypsum sheathing applied behind an exterior covering on the underside of the rafter tails or soffit
4. The exterior portion of a 1-hour fire resistive exterior wall assembly applied to the underside of the rafter tails or soffit including assemblies using the gypsum panel and sheathing products listed in the Gypsum Association Fire Resistance Design Manual
5. Boxed-in roof eave soffit assemblies with a horizontal underside that meet the performance criteria in accordance with the test procedures set forth in SFM Standard 12-7A-3."

"Section 707A.6 of the California Building Code is amended to read as follows:

707A.6 Exterior porch ceilings. The exposed underside of exterior porch ceilings shall be protected by one of the following:

1. Noncombustible material
2. Ignition-resistant material
3. One layer of 5/8-inch Type X gypsum sheathing applied behind the exterior covering on the underside of the ceiling
4. The exterior portion of a 1-hour fire resistive exterior wall assembly applied to the underside of the ceiling assembly including assemblies using the gypsum panel and sheathing products listed in the Gypsum Association Fire Resistance Design Manual
5. Porch ceiling assemblies with a horizontal underside that meet the performance criteria in accordance with the test procedures set forth in SFM Standard 12-7A-3."

"Section 707A.7 of the California Building Code is amended to read as follows:

707A.7 Floor projections. The exposed underside of a cantilevered floor projection where a floor assembly extends over an exterior wall shall be protected by one of the following:

1. Noncombustible material
2. Ignition-resistant material
3. One layer of 5/8-inch Type X gypsum sheathing applied behind an exterior covering on the underside of the floor projection
4. The exterior portion of a 1-hour fire resistive exterior wall assembly applied to the underside of the floor projection including assemblies using the gypsum panel and sheathing products listed in the Gypsum Association Fire Resistance Design Manual
5. The underside of a floor projection assembly that meet the performance criteria in accordance with the test procedures set forth in SFM Standard 12-7A-3."

"Section 709A.3 of the California Building Code is amended to read as follows:

709A.3 Decking Surfaces. The walking surface material of decks, porches, balconies and stairs shall be constructed with one of the following materials:

1. Ignition-resistant material that complies with the performance requirements of both SFM Standard 12-7A-4 and SFM Standard 12-7A-5.
2. Exterior fire retardant treated wood
3. Noncombustible material
4. Any material that complies with the performance requirements of SFM Standard 12-7A-4A when attached exterior wall covering is also either noncombustible or ignition-resistant material."

"Section 903.2 of the California Building Code is amended to read as follows:

903.2 Where required.

A. Approved automatic sprinkler systems in new buildings and structures shall be required for all occupancies, except U occupancies which are sheds that are less than five hundred (500) square feet.

B. Approved automatic sprinkler systems shall be required in all existing buildings if: (i) additions, alterations or repairs are made within any twelve (12) month period which exceed fifty percent (50%) of the value of such existing building, (ii) an addition is constructed which exceeds fifty percent (50%) of the square footage of the existing building, or (iii) an addition of more than five thousand (5,000) square feet is constructed.

C. Areas occupied by the following existing occupancies shall have installed an automatic fire-extinguishing system in compliance with this code:

(1). Throughout all existing eating establishments having a floor area in excess of three thousand (3,000) square feet.
(2). Throughout bowling alleys.
(3). Throughout public assembly occupancies having an occupant load of three hundred (300) or more persons. If such occupancies are located above the first floor, the floors below shall be provided with an automatic sprinkler system; provided further, public assembly occupancies of three hundred (300) or more persons placed in buildings existing prior to August 19, 1976, shall not be required to provide an automatic fire-extinguishing system in floors below such occupancy.
(4). Throughout hotels except those areas used exclusively for lodging.
(5). Throughout retail sales rooms classified as group M and S occupancies if the floor area of all floors exceeds twelve thousand (12,000) square feet, and in group M and S retail sales and storage occupancies more than three (3) stories in height, and in group M and S occupancies, if such occupancies are located within the same building or structure as group R-I occupancies. The area of mezzanines shall be included in determining the areas where sprinklers are required.
(6). Nightclubs and discos in rooms primarily used for entertaining occupants who are drinking or dining and unseparated accessory uses where the total area of such unseparated rooms and assembly uses exceeds three thousand (3,000) square feet. For uses to be considered "separated," the separation shall be not less than is required for a one-hour occupancy separation.
(7). In every story or basement of all buildings if the floor area exceeds fifteen hundred (1,500) square feet and there is not provided at least twenty (20) square feet of opening entirely above the adjoining ground level in each 50 linear feet or fraction thereof of exterior wall in the story or basement on at least one side of the building. Openings shall have a minimum dimension of not less than thirty (30) inches. Such openings shall be accessible to the fire department from the exterior and shall not be obstructed in a manner that fire fighting or rescue cannot be accomplished from the exterior.

When openings in a story are provided on only one side and the opposite wall of such story is more than seventy-five (75) feet from such openings, the story shall be provided with an

approved automatic sprinkler system, or openings as specified above shall be provided on at least two sides of an exterior wall of the story.

(8). In rooms where nitrate film is stored and handled.

(9). In protected combustible fiber storage vaults as defined in the fire code.

D. Approved automatic sprinkler systems shall be required for new Ambulatory Health Care Facilities (as that term is defined herein) located in an existing building or portion thereof, and that are classified as a Business Group B or Institutional Group I-2.1 occupancy.

"Section 903.2.1 through 903.2.10 of the California Building Code (and the subsections therein) are hereby deleted in their entirety."

"Section 903.2.11 of California Building Code is amended to read as follows:

903.2.11 Specific building areas and hazards. In all occupancies an *automatic sprinkler* system shall be installed for building design or hazards in the locations set forth in Section 903.2.11.1 through 903.2.11.11."

"Section 903.2.11.2 of the California Building Code is amended to read as follows:

903.2.11.2 Rubbish and linen chutes. An *automatic sprinkler system* shall be installed at the top of rubbish and linen chutes and in their termination rooms. Chutes extending through two or more floors shall have additional sprinkler heads installed within such chutes at alternate floors. Chute sprinklers shall be accessible for servicing."

"Section 903.2.11.7 is added to the California Building Code to read as follows:

903.2.11.7 Elevator pits. Approved automatic sprinklers shall be provided in new elevator pits."

"Section 903.2.11.8 is added to the California Building Code to read as follows:

903.2.11.8 Storage and use of nitrate film. An automatic sprinkler system shall be provided throughout all new rooms where nitrate film is stored and handled."

"Section 903.2.11.9 is added to the California Building Code to read as follows:

903.2.11.9 Fiber storage vaults. An automatic sprinkler system shall be provided in new combustible fiber storage vaults as defined in the fire code."

"Section 903.2.11.10 is added to California Building Code to read as follows:

903.2.11.10 Bowling alleys. An automatic sprinkler system shall be provided throughout all new bowling alleys."

"Section 903.2.11.11 is added to the California Building Code to read as follows:

903.2.11.11 Balconies and decks. Sprinkler protection shall be provided for exterior overhangs, balconies, decks, and ground floor patios of dwelling units exceeding four (4) feet in width."

"Section 903.3.1.2 of the California Building Code is deleted."

"Section 903.3.1.3.1 is added to the California Building Code to read as follows:

903.3.1.3.1 Double check valve. Two check valves are required to be installed at each fire sprinkler riser in NFPA 13D systems and an approved backflow assembly (DCDA, DCVA, or RPZ) for NFPA 13 systems."

"Section 903.3.1.3.2 is added the California Building Code to read as follows:

903.3.1.3.2 Fire sprinkler riser assemblies. Where fire sprinklers are required, each separate structure shall have fire sprinkler riser assembly with a main control valve, separate domestic valves, identification signage, and exterior horn strobes."

"Section 903.3.5.1.1 of the California Building Code is amended to read as follows:

903.3.5.1.1 Limited area sprinkler systems. Limited area sprinkler systems serving fewer than 20 sprinklers on any single connection are permitted to be connected to the domestic service where a wet automatic standpipe is not available. Limited area sprinkler systems connected to domestic water supplies shall comply with each of the following requirements:

1. Valves shall not be installed between the domestic water riser control valve and the sprinklers.
   Exception: An *approved* indicating control valve supervised in the open position in accordance with Section 903.4.
2. The domestic service shall be capable of supplying the simultaneous domestic demand and the sprinkler demand required to be hydraulically calculated by NFPA 13 or NFPA 13D."

"Section 903.3.5.1.2 of the California Building Code is amended to read as follows:

903.3.5.1.2 Residential combination services. A single combination water supply shall be allowed provided that the domestic demand is added to the sprinkler demand as required by NFPA."

"Section 903.3.7 of the California Building Code is amended to read as follows:

903.3.7 Fire department connections. The location and size of fire department connection shall be *approved* by the *fire code official*."

"Section 903.4 of the California Building Code is amended to read as follows:

Section 903.4 Sprinkler system monitoring and alarms. All valves controlling the water supply for automatic sprinkler systems, pumps, tanks, water levels and temperatures, critical air pressures, and water-flow switches on all sprinkler systems shall have all valves locked in the open position as required by the Fire Official and be electrically supervised by a *listed* fire alarm control unit. Where the combination of new and existing sprinkler systems totaling 20 sprinkler heads or more on one property are being modified or altered, the entire sprinkler system shall be electrically monitored offsite by a supervising station.

Exceptions:

1. New and existing sprinkler systems with a combined total of 19 heads or less on one property."

"Section 903.4.2 of the California Building Code is amended to read as follows:

903.4.2 Alarms. *Interior and exterior* approved audible and visual devices shall be connected to every automatic sprinkler system *in an approved location.* Such sprinkler water-flow alarm devices shall be activated by water flow equivalent to the flow of a single sprinkler of the smallest orifice size installed in the system. Where a *building* fire alarm system is installed, actuation of the automatic sprinkler system shall actuate the building fire alarm system. Approved alarm notification appliances shall be provided."

"Section 907.2.11 of the California Building Code is amended to read as follows:

Section 907.2.11 Smoke Alarms. Listed single- and multiple-station smoke alarms complying with UL 217 for all new and existing R-occupancies shall be installed as described in 907.2.11.1, 907.2.11.2, 907.2.11.3 and 907.2.11.4 and NFPA 72."

"Section 907.2.11.3 of the California Building Code is amended to read as follows:

907.2.11.3 Interconnection. Where more than one smoke alarm is required to be installed within an individual dwelling unit in Group R-2, R-3, *R-3.1,* or R-4, or within an individual dwelling unit or sleeping unit in Group R-1, the smoke alarms shall be interconnected in such a manner that the activation of one alarm will activate all of the alarms in the individual unit. The alarm shall be clearly audible in all bedrooms over background noise levels with all intervening doors closed. When low-voltage systems are required, the fire official may require additional sounder bases installed. Low voltage systems shall be installed per NFPA 72 fire alarm system requirements."

"Section 907.2.11.4 of the California Building Code is amended to read as follows:

Section 907.2.11.4 Power Source. In existing construction, new construction, and in newly classified group R occupancies, required smoke alarms shall receive their primary power from the building wiring where such wiring is served from a commercial source and shall be equipped with a battery backup. Smoke alarms shall emit a signal when the batteries are low. Wiring shall be permanent and without a disconnecting switch other than as required for overcurrent protection.

Exception: Smoke alarms are not required to be equipped with battery backup where they are connected to an emergency electrical system."

"Section 1006.3 of the California Building Code is amended to read as follows:

1006.3 Illumination emergency power. The power supply for means of egress illumination shall normally be provided by the premises' electrical supply.

In the event of power supply failure, an emergency electrical system shall automatically illuminate the following areas.

1. Aisles and unenclosed egress stairways in rooms and spaces that require two or more means of egress.
2. Corridors, exit enclosures and exit passageways in buildings required to have two or more exits.
3. Exterior egress components at other than the level of exit discharge until exit discharge is accomplished for buildings required to have two or more exits.
4. Interior exit discharge elements, as permitted in Section 1027.1, in building required to have two or more exits.
5. Exterior landings, as required by Section 1008.1.6, for exit discharge doorways in buildings required to have two or more exits.
6. Parking Garages.

Exception: Parking Garages for Single Family Residences.

The emergency power system shall provide power for duration of not less than 90 minutes and shall consist of storage batteries, unit equipment or an on-site generator. The installation of the emergency power system shall be in accordance with Chapter 27 of the *California Building Code.*"

"Section 1008.1.4.6 of the California Building Code is amended to read as follows:

1008.1.4.6 Access-controlled elevator lobby egress doors. *When approved by the fire official, the entrance doors within an elevator lobby in a means of egress of midrise and highrise buildings serving offices that are equipped throughout with an automatic sprinkler system in accordance with Section 903.3.1.1 and an approved automatic smoke detection system installed in accordance with Section 907, are permitted to be equipped with an approved entrance and egress access control system which shall be installed in accordance with all of the following criteria:*

1. *Locks for the elevator lobby shall be UL and California State Fire Marshal listed fail-safe type locking mechanisms. The locking device shall automatically release on activation of any fire alarm device on the floor of alarm (waterflow, smoke detector, manual pull station, etc.) All locking devices shall unlock, but not unlatch, upon activation.*
2. *A two-way voice communication system, utilizing dedicated lines, shall be provided from each locked elevator lobby to the 24-hour staffed location on site, annunciated as to location. Operating instructions shall be posted above each two-way communication device.*
3. *Provide an approved momentary mushroom shaped palm button connected to the doors and installed adjacent to each locked elevator lobby exit door which will release the door locks when operated by an individual in the elevator lobby. The locks shall be reset manually at the door. Mount palm button so that center line is* 48 *inches (1219 mm) above finish door.*

   Provide a sign stating:

   IN CASE OF EMERGENCY, PUSH PALM
   BUTTON. DOOR WILL UNLOCK AND
   SECURITY ALARM WILL SOUND.

   The sign lettering shall be 3/4-inch (19.1 *mm) high letters by 1/8-inch* (3.2 *mm) width stroke on a contrasting background.*
4. *Loss of power to that part of the access control system which locks the doors shall automatically unlock the doors."*

"Section 1022.8 of the California Building Code is amended to read as follows:

1022.8 Floor identification signs. A sign shall be provided at each floor landing in exit enclosures connecting more than two stories designating the floor level, the terminus of the top and bottom of the exit enclosure and the identification of the stair or ramp. The signage shall also state the story of, and the direction to, the exit discharge and the availability of roof access from the enclosure for the fire department. The sign shall be located 5 feet (1524 mm) above the floor landing in a position that is readily visible when the doors are in the open and closed positions. Signs shall be installed on the interior of the stairways on each floor and on the exterior door of each stair door at the ground level, to identify each stair landing and indicate the upper and lower termination of the stairway. Floor level identifications and markings shall remain consistent throughout the entire property or building including, but not limited to lobbies, hallways, parking levels, and basement levels.

Tactile floor identification signs that comply with 1117B.5.1Item 1 *shall be located at the landing of each floor level, placed adjacent to the door on the latch side, in all enclosed stairways in buildings two or more stories in height to identify the floor level. At the exit discharge level, the sign shall include a raised five pointed star located to the left of the identifying floor level. The outside diameter of the star shall be the same as the height of the raised characters."*

"Section 1022.8.1 of the California Building Code is amended to read as follows:

1022.8.1 Signage requirements. *Stairway* identification signs shall comply with all of the following requirements:

1. The signs shall be a minimum size of 18 inches (457 mm) by 12 inches (305 mm).
2. The letters designating the identification of the stair enclosure, *such as STAIR NO.* 1 *or WEST STAIR, shall be placed at the top of the sign and* shall be a minimum of 1-1/2 inches (38 mm) in height *block lettering with 1/4 inch* (6 *mm) strokes.*
3. The number designating the floor level shall be a minimum of 5 inches (127 mm) in height *with 3/4-inch* (19 *mm) strokes* and located in the center of the sign. *The mezzanine levels shall have*

the letter "M" preceding the floor level. Basement levels shall have the letter "B" preceding the floor number.

4. All other lettering and numbers shall be a minimum of 1 inch (25 mm) in height.
5. *The stairway's upper terminus, such as ROOF ACCESS or NO ROOF ACCESS, shall be placed under the stairway identification in 1-inch-high (25 mm) block lettering with 1/4-inch* (6 *mm) strokes.*
6. *The lower and upper terminus of the stairway shall be placed at the bottom of the sign in 1-inch-high (25mm) block lettering with 1/4 inch* (6 *mm) strokes.*
7. Characters and their background shall have a nonglare finish. Characters shall contrast with their background, with either light characters on a dark background or dark characters on a light background.
8. When signs required by Section 1022.8 are installed in interior exit enclosures of buildings subject to Section 1024, the signs shall be made of the same materials as required by Section 1024.4.
9. Signs shall also be installed on the exterior of all ground level stairway doors."

"Section 1505.1 of the California Building Code is amended to read as follows:

Section 1505.1 General. Except as otherwise provided in this section, roof coverings or roof assemblies on any structure regulated by this code shall be a fire-retardant roof covering or roof assembly that is listed as a class A assembly in accordance with ASTM E 108 or UL 790. In addition, no wood shall be used as a roof covering material. Noncombustible roof coverings may be applied in accordance with the manufacturer's requirements in lieu of a fire-retardant roofing assembly.

Exception:

(1) Roof repairs of less than 10 percent of the total roof area on existing structures in any one year period may be repaired with a roof covering that meets the same fire retardant standard as the existing roof."

"Section 1505.1.1 of the California Building Code is amended to read as follows:

1505.1.1 Roof Coverings within Very High Fire Hazard Severity Zones. *The entire roof covering of every existing structure where more than 50 percent of the total roof area is replaced within any one-year period, the entire roof covering of every new structure, and any roof covering applied in the alteration, repair or replacement of the roof of every existing structure, shall be a fire-retardant roof covering that is at least Class A non-wood."*

"Section 1505.1.2 of the California Building Code is amended to read as follows:

1505.1.2 Roof Coverings within State Responsibility Areas. The entire roof covering of every existing structure where more than 50 percent of the total roof area is replaced within any one-year period, the entire roof covering of every new structure, and any roof covering applied in the alteration, repair or replacement of the roof of every existing structure, shall be a fire-retardant roof covering that is at least Class A non-wood."

"Section 1505.1.3 of the California Building Code is amended to read as follows:

1505.1.3 Roof Coverings in All Other Areas. The entire roof covering of every existing structure where more than 50 percent of the total roof area is replaced within any one-year period, the entire roof covering of every new structure, and any roof covering applied in the alteration, repair or replacement of the roof of every existing structure, shall be a fire-retardant roof covering that is at least Class A non-wood."

"Section 1505.1.5 is added to the California Building Code to read as follows:

Section 1505.1.5 Class A Roof Covering Requirement. Notwithstanding any other requirement of the Beverly Hills Municipal Code, no later than July 1, 2013, all roof coverings in the city of Beverly Hills shall be fire retardant class A."

"Section 1509.6 is added to the California Building Code to read as follows:

Section 1509.6 Roof Top Equipment.

Section 1509.6.1 Equipment Enclosures. Operating equipment, including associated ducting, located on the roof of a building shall be enclosed so as to be shielded from view in a horizontal plane or lower and so as to comply with the noise abatement provisions of chapter 1 of title 5 of the Beverly Hills municipal code. The enclosure finish shall match that of the building exterior walls. Enclosures on buildings with non-residential uses shall be of non-combustible, opaque material."

"Section 1613.6.1 of the 2010 Edition of the California Building Code is amended to read as follows:

1613.6.1 Assumption of flexible diaphragm. Add the following text at the end of Section 12.3.1.1 of ASCE 7:

Diaphragms constructed of wood structural panels or un-topped steel decking shall also be permitted to be idealized as flexible, provided all of the following conditions are met:

1. Toppings of concrete or similar materials are not placed over wood structural panel diaphragms except for nonstructural toppings no greater than 1 ½ inches (38 mm) thick.

2. Each line of vertical elements of the seismic-force-resisting system complies with the allowable story drift of Table 12.12-1.

3. Vertical elements of the seismic-force-resisting system are light-framed walls sheathed with wood structural panels rated for shear resistance or steel sheets.

5. Portions of wood structural panel diaphragms that cantilever beyond the vertical elements of the seismic-force-resisting system are designed in accordance with Section 4.2.5.2 of AF&PA SDPWS."

"Equation 16-44 of Section 1613.6.7 of the California Building Code is amended to read as follows:

$$\delta_M = \frac{C_d \delta_{max}}{I} \qquad \textbf{(Equation 16-44)}$$

where:
C_d = Deflection amplification factor in Table 12.2-1 of ASCE 7.
δ_{max} = Maximum displacement defined in Section 12.8.4.3 of ASCE 7."

"Section 1613.8 is added to the California Building Code to read as follows:

1613.8 ASCE 7, Table 12.8-2. Modify ASCE 7 Table 12.8-2 by adding the following:

Structure Type	C_t	x
Eccentrically braced steel frames and buckling-restrained braced frames	0.03 (0.0731)[a]	0.75

"Section 1613.9 is added to the California Building Code to read as follows:

1613.9 ASCE 7, 12.2.3.1, Exception 3. Modify ASCE 7 Section 12.2.3.1 Exception 3 to read as follows:

3. Detached one and two family dwellings up to two stories in height of light frame construction."

"Section 1613.10 is added to the California Building Code to read as follows:

1613.10 ASCE 7, Section 12.8.7. Modify ASCE 7 Section 12.8.7 by amending Equation 12.8-16 as follows:

$$\theta = \frac{P_x \Delta I}{V_x h_{sx} C_d} \qquad (12.8\text{-}16)"$$

"Section 1613.11 is added to the California Building Code to read as follows:

1613.11 ASCE 7, Section 12.11.2.2.3. Modify ASCE 7, Section 12.11.2.2.3 to read as follows:

12.11.2.2.3 Wood Diaphragms. In wood diaphragms, the continuous ties shall be in addition to the diaphragm sheathing. Anchorage shall not be accomplished by use of toe nails or nails subject to withdrawal nor shall wood ledgers or framing be used in cross-grain bending or cross-grain tension. The diaphragm sheathing shall not be considered effective as providing ties or struts required by this section.

For structures assigned to Seismic Design Category D, E or F, wood diaphragms supporting concrete or masonry walls shall comply with the following:

1. The spacing of continuous ties shall not exceed 40 feet. Added chords of diaphragms may be used to form subdiaphragms to transmit the anchorage forces to the main continuous crossties.

2. The maximum diaphragm shear used to determine the depth of the subdiaphragm shall not exceed 75% of the maximum diaphragm shear."

"Section 1613.12 is added to the California Building Code to read as follows:

1613.12 Seismic Design Provisions for Hillside Buildings.

1613.12.1 Purpose. The purpose of this section is to establish minimum regulations for the design and construction of new buildings and additions to existing buildings when constructing such buildings on or into slopes steeper than one unit vertical in three units horizontal (33.3%). These regulations establish minimum standards for seismic force resistance to reduce the risk of injury or loss of life in the event of earthquakes.

1613.12.2 Scope. The provisions of this section shall apply to the design of the lateral-force-resisting system for hillside buildings at and below the base level diaphragm. The design of the lateral-force-resisting system above the base level diaphragm shall be in accordance with the provisions for seismic and wind design as required elsewhere in this division.

Exception: Non-habitable accessory buildings and decks not supporting or supported from the main building are exempt from these regulations.

1613.12.3 Definitions. For the purposes of this section certain terms are defined as follows:

BASE LEVEL DIAPHRAGM is the floor at, or closest to, the top of the highest level of the foundation.

DIAPHRAGM ANCHORS are assemblies that connect a diaphragm to the adjacent foundation at the uphill diaphragm edge.

DOWNHILL DIRECTION is the descending direction of the slope approximately perpendicular to the slope contours.

FOUNDATION is concrete or masonry which supports a building, including footings, stem walls, retaining walls, and grade beams.

FOUNDATION EXTENDING IN THE DOWNHILL DIRECTION is a foundation running downhill and approximately perpendicular to the uphill foundation.

HILLSIDE BUILDING is any building or portion thereof constructed on or into a slope steeper than one unit vertical in three units horizontal (33.3%). If only a portion of the building is supported on or into the slope, these regulations apply to the entire building.

PRIMARY ANCHORS are diaphragm anchors designed for and providing a direct connection as described in Sections 1613.12.5 and 1613.12.7.3 between the diaphragm and the uphill foundation.

SECONDARY ANCHORS are diaphragm anchors designed for and providing a redundant diaphragm to foundation connection, as described in Sections 1613.12.6 and 1613.12.7.4.

UPHILL DIAPHRAGM EDGE is the edge of the diaphragm adjacent and closest to the highest ground level at the perimeter of the diaphragm.

UPHILL FOUNDATION is the foundation parallel and closest to the uphill diaphragm edge.

1613.12.4 Analysis and Design.

1613.12.4.1 General. Every hillside building within the scope of this section shall be analyzed, designed, and constructed in accordance with the provisions of this division. When the code-prescribed wind design produces greater effects, the wind design shall govern, but detailing requirements and limitations prescribed in this and referenced sections shall be followed.

1613.12.4.2 Base Level Diaphragm-Downhill Direction. The following provisions shall apply to the seismic analysis and design of the connections for the base level diaphragm in the downhill direction.

1613.12.4.2.1 Base for Lateral Force Design Defined. For seismic forces acting in the downhill direction, the base of the building shall be the floor at or closest to the top of the highest level of the foundation.

1613.12.4.2.2 Base Shear. In developing the base shear for seismic design, the response modification coefficient (R) shall not exceed 5 for bearing wall and building frame systems. The total base shear shall include the forces tributary to the base level diaphragm including forces from the base level diaphragm.

1613.12.5 Base Shear Resistance-Primary Anchors.

1613.12.5.1 General. The base shear in the downhill direction shall be resisted through primary anchors from diaphragm struts provided in the base level diaphragm to the foundation.

1613.12.5.2 Location of Primary Anchors. A primary anchor and diaphragm strut shall be provided in line with each foundation extending in the downhill direction. Primary anchors and diaphragm struts shall also be provided where interior vertical lateral-force-resisting elements occur above and in contact with the base level diaphragm. The spacing of primary anchors and diaphragm struts or collectors shall in no case exceed 30 feet (9144 mm).

1613.12.5.3 Design of Primary Anchors and Diaphragm Struts. Primary anchors and diaphragm struts shall be designed in accordance with the requirements of Section 1613.12.8.

1613.12.5.4 Limitations. The following lateral-force-resisting elements shall not be designed to resist seismic forces below the base level diaphragm in the downhill direction:

1. Wood structural panel wall sheathing,
2. Cement plaster and lath,
3. Gypsum wallboard, and
4. Tension only braced frames.

Braced frames designed in accordance with the requirements of Section 2205.2.2 may be used to transfer forces from the primary anchors and diaphragm struts to the foundation provided lateral forces do not induce flexural stresses in any member of the frame or in the diaphragm struts. Deflections of frames shall account for the variation in slope of diagonal members when the frame is not rectangular.

1613.12.6. Base Shear Resistance-Secondary Anchors.

1613.12.6.1 General. In addition to the primary anchors required by Section 1613.12.5, the base shear in the downhill direction shall be resisted through secondary anchors in the uphill foundation connected to diaphragm struts in the base level diaphragm.

Exception: Secondary anchors are not required where foundations extending in the downhill direction spaced at not more than 30 feet (9144 mm) on center extend up to and are directly connected to the base level diaphragm for at least 70% of the diaphragm depth.

1613.12.6.2 Secondary Anchor Capacity and Spacing. Secondary anchors at the base level diaphragm shall be designed for a minimum force equal to the base shear, including forces tributary to the base level diaphragm, but not less than 600 pounds per lineal foot (8.76 kN/m). The secondary anchors shall be uniformly distributed along the uphill diaphragm edge and shall be spaced a maximum of four feet (1219 mm) on center.

1613.12.6.3 Design. Secondary anchors and diaphragm struts shall be designed in accordance with Section 1613.12.8.

1613.12.7 Diaphragms Below the Base Level-Downhill Direction. The following provisions shall apply to the lateral analysis and design of the connections for all diaphragms below the base level diaphragm in the downhill direction.

1613.12.7.1 Diaphragm Defined. Every floor level below the base level diaphragm shall be designed as a diaphragm.
1613.12.7.2 Design Force. Each diaphragm below the base level diaphragm shall be designed for all tributary loads at that level using a minimum seismic force factor not less than the base shear coefficient.

1613.12.7.3 Design Force Resistance-Primary Anchors. The design force described in Section 1613.12.7.2 shall be resisted through primary anchors from diaphragm struts provided in each diaphragm to the foundation. Primary anchors shall be provided and designed in accordance with the requirements and limitations of Section 1613.12.5.

1613.12.7.4 Design Force Resistance-Secondary Anchors.

1613.12.7.4.1 General. In addition to the primary anchors required in Section 1613.12.7.3, the design force in the downhill direction shall be resisted through secondary anchors in the uphill foundation connected to diaphragm struts in each diaphragm below the base level.

> **Exception:** Secondary anchors are not required where foundations extending in the downhill direction, spaced at not more than 30 feet (9144 mm) on center, extend up to and are directly connected to each diaphragm below the base level for at least 70% of the diaphragm depth.

1613.12.7.4.2 Secondary Anchor Capacity. Secondary anchors at each diaphragm below the base level diaphragm shall be designed for a minimum force equal to the design force but not less than 300 pounds per lineal foot (4.38 kN/m). The secondary anchors shall be uniformly distributed along the uphill diaphragm edge and shall be spaced a maximum of four feet (1219 mm) on center.

1613.12.7.4.3 Design. Secondary anchors and diaphragm struts shall be designed in accordance with Section 1613.12.8.

1613.12.8 Primary and Secondary Anchorage and Diaphragm Strut Design. Primary and secondary anchors and diaphragm struts shall be designed in accordance with the following provisions:

1. Fasteners. All bolted fasteners used to develop connections to wood members shall be provided with square plate washers at all bolt heads and nuts. Washers shall be minimum 0.229 inch by 3 inches by 3 inches (5.82 mm by 76 mm by 76 mm) in size. Nuts shall be tightened to finger tight plus one half (1/2) wrench turn prior to covering the framing.

2. Fastening. The diaphragm to foundation anchorage shall not be accomplished by the use of toenailing, nails subject to withdrawal, or wood in cross-grain bending or cross-grain tension.

3. Size of Wood Members. Wood diaphragm struts collectors, and other wood members connected to primary anchors shall not be less than three-inch (76 mm) nominal width. The effects of eccentricity on wood members shall be evaluated as required per Item 9.

4. Design. Primary and secondary anchorage, including diaphragm struts, splices, and collectors shall be designed for 125% of the tributary force.

5. Allowable Stress Increase. The one-third allowable stress increase permitted under Section 1605.3.2 shall not be taken when the working (allowable) stress design method is used.

6. Steel Element of Structural Wall anchorage System. The strength design forces for steel elements of the structural wall anchorage system, with the exception of anchor bolts and reinforcing steel, shall be increased by 1.4 times the forces otherwise required.

7. Primary Anchors. The load path for primary anchors and diaphragm struts shall be fully developed into the diaphragm and into the foundation. The foundation must be shown to be adequate to resist the concentrated loads from the primary anchors.

8. Secondary Anchors. The load path for secondary anchors and diaphragm struts shall be fully developed in the diaphragm but need not be developed beyond the connection to the foundation.

9. Symmetry. All lateral force foundation anchorage and diaphragm strut connections shall be symmetrical. Eccentric connections may be permitted when demonstrated by calculation or tests that all components of force have been provided for in the structural analysis or tests.

10. Wood Ledgers. Wood ledgers shall not be used to resist cross-grain bending or cross-grain tension.

1613.12.9 Lateral-Force-Resisting Elements Normal to the Downhill Direction.

1613.12.9.1 General. In the direction normal to the downhill direction, lateral-force-resisting elements shall be designed in accordance with the requirements of this section.

1613.12.9.2 Base Shear. In developing the base shear for seismic design, the response modification coefficient (R) shall not exceed 5 for bearing wall and building frame systems.

1613.12.9.3 Vertical Distribution of Seismic Forces. For seismic forces acting normal to the downhill direction the distribution of seismic forces over the height of the building using Section 12.8.3 of ASCE 7 shall be determined using the height measured from the top of the lowest level of the building foundation.

1613.12.9.4 Drift Limitations. The story drift below the base level diaphragm shall not exceed 0.007 times the story height at strength design force level. The total drift from the base level diaphragm to the top of the foundation shall not exceed 3/4 inch (19 mm). Where the story height or the height from the base level diaphragm to the top of the foundation varies because of a stepped footing or story offset, the height shall be measured from the average height of the top of the foundation. The story drift shall not be reduced by the effect of horizontal diaphragm stiffness.

1613.12.9.5 Distribution of Lateral Forces.

1613.12.9.5.1 General. The design lateral force shall be distributed to lateral-force-resisting elements of varying heights in accordance with the stiffness of each individual element.

1613.12.9.5.2 Wood Structural Panel Sheathed Walls. The stiffness of a stepped wood structural panel shear wall may be determined by dividing the wall into adjacent rectangular elements, subject to the same top of wall deflection. Deflections of shear walls may be estimated by AF&PA SDPWS Section 4.3.2. Sheathing and fastening requirements for the stiffest section shall be used for the entire wall. Each section of wall shall be anchored for shear and uplift at each step. The minimum horizontal length of a step shall be eight feet (2438 mm) and the maximum vertical height of a step shall be two feet, eight inches (813 mm).

1613.12.9.5.3 Reinforced Concrete or Masonry Shear Walls. Reinforced concrete or masonry shear walls shall have forces distributed in proportion to the rigidity of each section of the wall.

1613.12.9.6 Limitations. The following lateral force-resisting-elements shall not be designed to resist lateral forces below the base level diaphragm in the direction normal to the downhill direction:

1. Cement plaster and lath,

2. Gypsum wallboard, and

3. Tension-only braced frames.

Braced frames designed in accordance with the requirements of Section 2205.2.2 of this Code may be designed as lateral-force-resisting elements in the direction normal to the downhill direction, provided lateral forces do not induce flexural stresses in any member of the frame. Deflections of frames shall account for the variation in slope of diagonal members when the frame is not rectangular.

1613.12.10 Specific Design Provisions.

1613.12.10.1 Footings and Grade Beams. All footings and grade beams shall comply with the following:

1. Grade beams shall extend at least 12 inches (305 mm) below the lowest adjacent grade and provide a minimum 24-inch (610 mm) distance horizontally from the bottom outside face of the grade beam to the face of the descending slope.

2. Continuous footings shall be reinforced with at least two No. 4 reinforcing bars at the top and two No. 4 reinforcing bars at the bottom.

3. All main footing and grade beam reinforcement steel shall be bent into the intersecting footing and fully developed around each corner and intersection.

4. All concrete stem walls shall extend from the foundation and reinforced as required for concrete or masonry walls.

1613.12.10.2 Protection Against Decay and Termites. All wood to earth separation shall comply with the following:

1. Where a footing or grade beam extends across a descending slope, the stem wall, grade beam, or footing shall extend up to a minimum 18 inches (457 mm) above the highest adjacent grade.

   Exception: At paved garage and doorway entrances to the building, the stem wall need only extend to the finished concrete slab, provided the wood framing is protected with a moisture proof barrier.

2. Wood ledgers supporting a vertical load of more than 100 pounds per lineal foot (1.46 kN/m) and located within 48 inches (1219 mm) of adjacent grade are prohibited. Galvanized steel ledgers and anchor bolts, with or without wood nailers, or treated or decay resistant sill plates supported on a concrete or masonry seat, may be used.

1613.12.10.3 Sill Plates. All sill plates and anchorage shall comply with the following:

1. All wood framed walls, including nonbearing walls, when resting on a footing, foundation, or grade beam stem wall, shall be supported on wood sill plates bearing on a level surface.

2. Power-driven fasteners shall not be used to anchor sill plates except at interior nonbearing walls not designed as shear walls.

1613.12.10.4 Column Base Plate Anchorage. The base of isolated wood posts (not framed into a stud wall) supporting a vertical load of 4000 pounds (17.8 kN) or more and the base plate for a steel column shall comply with the following:

1. When the post or column is supported on a pedestal extending above the top of a footing or grade beam, the pedestal shall be designed and reinforced as required for concrete or masonry columns. The pedestal shall be reinforced with a minimum of four No. 4 bars extending to the bottom of the footing or grade beam. The top of exterior pedestals shall be sloped for positive drainage.

2. The base plate anchor bolts or the embedded portion of the post base, and the vertical reinforcing bars for the pedestal, shall be confined with two No. 4 or three No. 3 ties within the top five inches (127 mm) of the concrete or masonry pedestal. The base plate anchor bolts shall be embedded a minimum of 20 bolt diameters into the concrete or masonry pedestal. The base plate anchor bolts and post bases shall be galvanized and each anchor bolt shall have at least two galvanized nuts above the base plate.

1613.12.10.5 Steel Beam to Column Supports. All steel beam to column supports shall be positively braced in each direction. Steel beams shall have stiffener plates installed on each side of the beam web at the column. The stiffener plates shall be welded to each beam flange and the beam web. Each brace connection or structural member shall consist of at least two 5/8 inch (15.9 mm) diameter machine bolts."

"Section 1613.13 is added to the California Building Code to read as follows:

1613.13 Suspended Ceilings. Minimum design and installation standards for suspended ceilings shall be determined in accordance with the requirements of Section 2506.2.1 of this Code and this subsection.

1613.13.1 Scope. This part contains special requirements for suspended ceilings and lighting systems. Provisions of Section 13.5.6 of ASCE 7 shall apply except as modified herein.

1613.13.2 General. The suspended ceilings and lighting systems shall be limited to 6 feet (1828 mm) below the structural deck unless the lateral bracing is designed by a licensed engineer or architect.

1613.13.3 Design and Installation Requirements.

1613.13.3.1 Bracing at Discontinuity. Positive bracing to the structure shall be provided at changes in the ceiling plane elevation or at discontinuities in the ceiling grid system.

1613.13.3.2 Support for Appendages. Cable trays, electrical conduits and piping shall be independently supported and independently braced from the structure.

1613.13.3.3 Sprinkler Heads. All sprinkler heads (drops) except fire-resistance-rated floor/ceiling or roof/ceiling assemblies, shall be designed to allow for free movement of the sprinkler pipes with oversize rings, sleeves or adaptors through the ceiling tile, in accordance with Section 13.5.6.2.2 (e) of ASCE 7.

Sprinkler heads penetrating fire-resistance-rated floor/ceiling or roof/ceiling assemblies shall comply with Section 713 of this Code.

1613.13.3.4 Perimeter Members. A minimum wall angle size of at least a two inch (51 mm) horizontal leg shall be used at perimeter walls and interior full height partitions. The first ceiling tile shall maintain 3/4 inch (19 mm) clear from the finish wall surface. An equivalent alternative detail that will provide sufficient movement due to anticipated lateral building displacement may be used in lieu of the long leg angle subject to the approval of the Superintendent of Building.

1613.13.4 Special Requirements for Means of Egress. Suspended ceiling assemblies located along means of egress serving an occupant load of 30 or more shall comply with the following provisions.

1613.13.4.1 General. Ceiling suspension systems shall be connected and braced with vertical hangers attached directly to the structural deck along the means of egress serving an occupant load of 30 or more and at lobbies accessory to Group A Occupancies. Spacing of vertical hangers shall not exceed 2 feet (610 mm) on center along the entire length of the suspended ceiling assembly located along the means of egress or at the lobby.

1613.13.4.2 Assembly Device. All lay-in panels shall be secured to the suspension ceiling assembly with two hold-down clips minimum for each tile within a 4-foot (1219 mm) radius of the exit lights and exit signs.

1613.13.4.3 Emergency Systems. Independent supports and braces shall be provided for light fixtures required for exit illumination. Power supply for exit illumination shall comply with the requirements of Section 1006.3 of this Code.

1613.13.4.4 Supports for Appendage. Separate support from the structural deck shall be provided for all appendages such as light fixtures, air diffusers, exit signs, and similar elements."

"Section 1704.4 of the California Building Code is amended to read as follows:

1704.4 Concrete Construction. The special inspections and verifications for concrete construction shall be as required by this section and Table 1704.4.

Exceptions: Special inspection shall not be required for:

1. Isolated spread concrete footings of buildings three stories or less above grade plane that are fully supported on earth or rock, where the structural design of the footing is based on a specified compressive strength, f'c, no greater than 2,500 pounds per square inch (psi) (17.2 Mpa).

2. Continuous concrete footings supporting walls of buildings three stories or less in height that are fully supported on earth or rock where:

2.1. The footings support walls of light-frame construction;
2.2. The footings are designed in accordance with Table 1805.4.2; or
2.3. The structural design of the footing is based on a specified compressive strength, f'c, no greater than 2,500 pounds per square inch (psi) (17.2 Mpa), regardless of the compressive strength specified in the construction documents or used in the footing construction.

3. Nonstructural concrete slabs supported directly on the ground, including prestressed slabs on grade, where the effective prestress in the concrete is less than 150 psi (1.03 Mpa).

4. Concrete patios, driveways and sidewalks, on grade.

"Section 1704.8 of the California Building Code is amended to read as follows:

1704.8 Driven deep foundations and connection grade beams. Special inspections shall be performed during installation and testing of driven deep foundation elements as required by Table 1704.8. Special inspections shall be performed for connection grade beams in accordance with Section 1704.4 for structures assigned to Seismic Design Category D, E or F. The approved geotechnical report, and the construction documents prepared by the registered design professionals, shall be used to determine compliance."

"Section 1704.9 of the California Building Code is amended to read as follows:
1704.9 Cast-in-place deep foundations and connection grade beams. Special inspections shall be performed during installation and testing of cast-in-place deep foundation elements as required by Table 1704.9. Special inspections shall be performed for connection grade beams in accordance with Section 1704.4 for structures assigned to Seismic Design Category D, E or F. The approved geotechnical report,

and the construction documents prepared by the registered design professionals, shall be used to determine compliance."

"Section 1705.3 of the Building Code is amended to read as follows:

1705.3 Seismic resistance. The statement of special inspections shall include seismic requirements for cases covered in Sections 1705.3.1 through 1705.3.5.

Exception: Seismic requirements are permitted to be excluded from the statement of special inspections for structures designed and constructed in accordance with the following:

1. The structure consists of light-frame construction; the design spectral response acceleration at short periods, S_{DS}, as determined in Section 1613.5.4, does not exceed 0.5g; and the height of the structure does not exceed 35 feet (10 668 mm) above grade plane; or

2. The structure is constructed using a reinforced masonry structural system or reinforced concrete structural system; the design spectral response acceleration at short periods, S_{DS}, as determined in Section 1613.5.4, does not exceed 0.5g, and the height of the structure does not exceed 25 feet (7620 mm) above grade plane; or

3. Detached one- or two-family dwellings not exceeding two stories above grade plane, provided the structure is not assigned to Seismic Design Category D, E or F and does not have any of the following plan or vertical irregularities in accordance with Section 12.3.2 of ASCE 7:

   3.1 Torsional irregularity.

   3.2 Nonparallel systems.

   3.3 Stiffness irregularity—extreme soft story and soft story.

   3.4 Discontinuity in capacity—weak story."

"Section 1710.1 of the California Building Code is amended to read as follows:

1710.1 General. Where required by the provisions of Section 1710.2 or 1710.3, the owner shall employ a structural observer to perform structural observations as defined in Section 1702. The structural observer shall be one of the following individuals:

1. The registered design professional responsible for the structural design, or

2. A registered design professional designated by the registered design professional responsible for the structural design.

Prior to the commencement of observations, the structural observer shall submit to the building official a written statement identifying the frequency and extent of structural observations.

The owner or owner's representative shall coordinate and call a preconstruction meeting between the structural observer, contractors, affected subcontractors and special inspectors. The structural observer shall preside over the meeting. The purpose of the meeting shall be to identify the major structural elements and connections that affect the vertical and lateral load resisting systems of the structure and to review scheduling of the required observations. A record of the meeting shall be included in the report submitted to the building official.
Observed deficiencies shall be reported in writing to the owner or owner's representative, special inspector, contractor and the building official. Upon the form prescribed by the building official, the structural observer shall submit to the building official a written statement at each significant construction stage stating that the site visits have been made and identifying any reported deficiencies which, to the

best of the structural observer's knowledge, have not been resolved. A final report by the structural observer which states that all observed deficiencies have been resolved is required before acceptance of the work by the building official."

"Section 1710.2 of the California Building Code is amended to read as follows:

1710.2 Structural observations for seismic resistance. Structural observations shall be provided for those structures assigned to Seismic Design Category D, E or F, as determined in Section 1613, where one or more of the following conditions exist:

1. The structure is classified as Occupancy Category III or IV in accordance with Table 1604.5.

2. The height of the structure is greater than 75 feet (22860 mm) above the base.

3. The structure is classified as Occupancy Category I or II in accordance with Table 1604.5, and a lateral design is required for the structure or portion thereof.

   Exception: One-story wood framed Group R-3 and Group U Occupancies less than 2000 square feet in area, provided the adjacent grade is not steeper than 1 unit vertical in 10 units horizontal (10% sloped), assigned to Seismic Design Category D.

4. When so designated by the registered design professional responsible for the structural design.

5. When such observation is specifically required by the building official."

"Section 1807.1.4 of the California Building Code is amended to read as follows:

1807.1.4 Permanent wood foundation systems. Permanent wood foundation systems shall be designed and installed in accordance with AF&PA PWF. Lumber and plywood shall be treated in accordance with AWPA U1 (Commodity Specification A, Use Category 4B and Section 5.2) and shall be identified in accordance with Section 2303.1.8.1. Permanent wood foundation systems shall not be used for structures assigned to Seismic Design Category D, E or F."

"Section 1807.1.6 of the California Building Code is amended to read as follows:

1807.1.6 Prescriptive design of concrete and masonry foundation walls. Concrete and masonry foundation walls that are laterally supported at the top and bottom shall be permitted to be designed and constructed in accordance with this section. Prescriptive design of foundation walls shall not be used for structures assigned to Seismic Design Category D, E or F."

"Section 1809.3 of the California Building Code is amended to read as follows:

1809.3 Stepped footings. The top surface of footings shall be level. The bottom surface of footings shall be permitted to have a slope not exceeding one unit vertical in 10 units horizontal (10-percent slope). Footings shall be stepped where it is necessary to change the elevation of the top surface of the footing or where the surface of the ground slopes more than one unit vertical in 10 units horizontal (10-percent slope).

For structures assigned to Seismic Design Category D, E or F, the stepping requirement shall also apply to the top surface of grade beams supporting walls. Footings shall be reinforced with four 1/2-inch diameter (12.7 mm) deformed reinforcing bars. Two bars shall be place at the top and bottom of the footings as shown in Figure 1809.3."

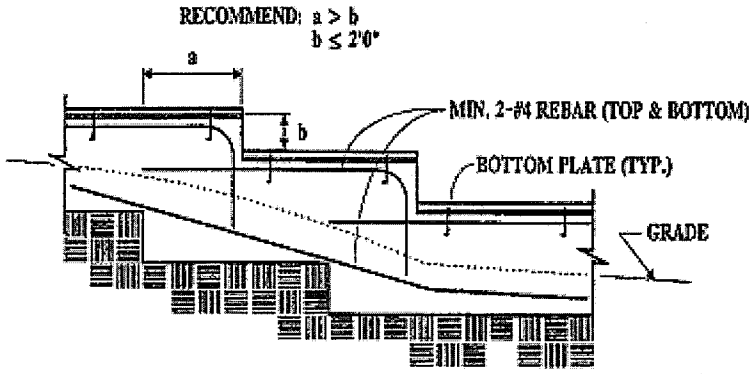

STEPPED FOUNDATIONS

FIGURE 1809.3
STEPPED FOOTING

"Section 1809.7 and Table 1809.7 of the 2010 Edition of the California Building Code are amended to read as follows:

1809.7 Prescriptive footings for light-frame construction. Where a specific design is not provided, concrete or masonry-unit footings supporting walls of light-frame construction shall be permitted to be designed in accordance with Table 1809.7. Prescriptive footings in Table 1809.7 shall not exceed one story above grade plane for structures assigned to Seismic Design Category D, E or F.

TABLE 1809.7
PRESCRIPTIVE FOOTINGS SUPPORTING WALLS OF LIGHT-FRAME CONSTRUCTION [a, b, c, d, e]

NUMBER OF FLOORS SUPPORTED BY THE FOOTING [f]	WIDTH OF FOOTING (inches)	THICKNESS OF FOOTING (inches)
1	12	6
2	15	6
3	18	8 [g]

For SI: 1 inch = 25.4 mm, 1 foot = 304.8 mm

a. Depth of footings shall be in accordance with Section 1809.4.
b. The ground under the floor shall be permitted to be excavated to the elevation of the top of the footing.
c. Not Adopted.
d. See Section 1908 for additional requirements for concrete footings of structures assigned to Seismic Design Category C, D, E or F.
e. For thickness of foundation walls, see Section 1807.1.6.
f. Footings shall be permitted to support a roof addition to the stipulated number of floors. Footings supporting roof only shall be as required for supporting one floor."

"Section 1809.12 of the California Building Code is amended to read as follows:

1809.12 Timber footings. Timber footings shall be permitted for buildings of Type V construction and as otherwise approved by the building official. Such footings shall be treated in accordance with AWPA U1 (Commodity Specification A, Use Category 4B). Treated timbers are not required where placed entirely below permanent water level, or where used as capping for wood piles that project above the water level

over submerged or marsh lands. The compressive stresses perpendicular to grain in untreated timber footing supported upon treated piles shall not exceed 70 percent of the allowable stresses for the species and grade of timber as specified in the AF&PA NDS. Timber footings shall not be used in structures assigned to Seismic Design Category D, E or F."

"Section 1810.3.2.4 of the 2010 Edition of the California Building Code is amended to read as follows:

1810.3.2.4 Timber. Timber deep foundation elements shall be designed as piles or poles in accordance with AF&PA NDS. Round timber elements shall conform to ASTM D 25. Sawn timber elements shall conform to DOC PS-20. Timber shall not be used in structures assigned to Seismic Design Category D, E or F."

"Section 1908.1 of the California Building Code is amended, and Sections 1908.1.11 through 1908.1.14 are added, to the California Building Code to read as follows:

1908.1 General. The text of ACI 318 shall be modified as indicated in Sections 1908.1.1 through 1908.1.14.

1908.1.11 ACI 318, Section 21.6.4.1. Modify ACI 318, Section 21.6.4.1, to read as follows:

Where the calculated point of contraflexure is not within the middle half of the member clear height, provide transverse reinforcement as specified in ACI 318 Sections 21.6.4.1, Items (a) through (c), over the full height of the member.

1908.1.12 ACI 318, Section 21.6.4. Modify ACI 318, Section 21.6.4, by adding Section 21.6.4.8 to read as follows:

21.6.4.8 – At any section where the design strength, φP_n, of the column is less than the sum of the shears V_e computed in accordance with ACI 318 Sections 21.5.4.1 and 21.6.5.1 for all the beams framing into the column above the level under consideration, transverse reinforcement as specified in ACI 318 Sections 21.6.4.1 through 21.6.4.3 shall be provided. For beams framing into opposite sides of the column, the moment components may be assumed to be of opposite sign. For the determination of the design strength, φP_n, of the column, these moments may be assumed to result from the deformation of the frame in any one principal axis.

1908.1.13 ACI 318, Section 21.9.4. Modify ACI 318, Section 21.9.4, by adding Section 21.9.4.6 to read as follows:

21.9.4.6 – Walls and portions of walls with $P_u > 0.35P_o$ shall not be considered to contribute to the calculated strength of the structure for resisting earthquake-induced forces. Such walls shall conform to the requirements of ACI 318 Section 21.13.

1908.1.14 ACI 318, Section 21.11.6. Modify ACI 318, Section 21.11.6, by adding the following:

Collector and boundary elements in topping slabs placed over precast floor and roof elements shall not be less than 3 inches (76 mm) or 6 d_b thick, where d_b is the diameter of the largest reinforcement in the topping slab."

"Section 1908.1.2 of California Building Code is amended to read as follows:

1908.1.2 ACI 318, Section 21.1.1. Modify ACI 318, Sections 21.1.1.3 and 21.1.1.7 as follows:

21.1.1.3 – Structures assigned to Seismic Design Category A shall satisfy requirements of Chapters 1 to 19 and 22; Chapter 21 does not apply. Structures assigned to Seismic Design Category B, C, D, E or F also shall satisfy 21.1.1.4 through 21.1.1.8, as applicable. Except for structural elements of plain concrete

complying with Section 1908.1.8 of the International Building Code, structural elements of plain concrete are prohibited in structures assigned to Seismic Design Category C, D, E or F.

21.1.1.7 – Structural systems designated as part of the seismic-force-resisting system shall be restricted to those permitted by ASCE 7. Except for Seismic Design Category A, for which Chapter 21 does not apply, the following provisions shall be satisfied for each structural system designated as part of the seismic-force-resisting system, regardless of the Seismic Design Category:

(a) Ordinary moment frames shall satisfy 21.2.
(b) Ordinary reinforced concrete structural walls and ordinary precast structural walls need not satisfy any provisions in Chapter 21.
(c) Intermediate moment frames shall satisfy 21.3.
(d) Intermediate precast structural walls shall satisfy 21.4.
(e) Special moment frames shall satisfy 21.5 through 21.8.
(f) Special structural walls shall satisfy 21.9.
(g) Special structural walls constructed using precast concrete shall satisfy 21.10.

All special moment frames and special structural walls shall also satisfy 21.1.3 through 21.1.7. Concrete tilt-up wall panels classified as intermediate precast structural wall system shall satisfy 21.9 in addition to 21.4.2 and 21.4.3 for structures assigned to Seismic Design Category D, E or F."

"Section 1908.1.3 of the 2010 Edition of the California Building Code is amended to read as follows:

1908.1.3 ACI 318, Section 21.4. Modify ACI 318, Section 21.4, by renumbering Section 21.4.3 to become 21.4.4 and adding new Sections 21.4.3, 21.4.5, 21.4.6 and 21.4.7 to read as follows:

21.4.3 – Connections that are designed to yield shall be capable of maintaining 80 percent of their design strength at the deformation induced by the design displacement or shall use Type 2 mechanical splices.

21.4.4 – Elements of the connection that are not designed to yield shall develop at least 1.5 S_y.

21.4.5 – Wall piers in Seismic Design Category D, E or F shall comply with Section 1908.1.4 of this Code.

21.4.6 – Wall piers not designed as part of a moment frame in buildings assigned to Seismic Design Category C shall have transverse reinforcement designed to resist the shear forces determined from 21.3.3. Spacing of transverse reinforcement shall not exceed 8 inches (203 mm). Transverse reinforcement shall be extended beyond the pier clear height for at least 12 inches (305 mm).

Exceptions:
1. Wall piers that satisfy 21.13.
2. Wall piers along a wall line within a story where other shear wall segments provide lateral support to the wall piers and such segments have a total stiffness of at least six times the sum of the stiffnesses of all the wall piers.

21.4.7 – Wall segments with a horizontal length-to-thickness ratio less than 2.5 shall be designed as columns."

"Section 1908.1.8 of the California Building Code is amended to read as follows:

1908.1.8 ACI 318, Section 22.10. Delete ACI 318, Section 22.10, and replace with the following:

22.10 – Plain concrete in structures assigned to Seismic Design Category C, D, E or F.

22.10.1 – Structures assigned to Seismic Design Category C, D, E or F shall not have elements of structural plain concrete, except as follows:

(a) Concrete used for fill with a minimum cement content of two (2) sacks of Portland cement per cubic yard.

(b) Isolated footings of plain concrete supporting pedestals or columns are permitted, provided the projection of the footing beyond the face of the supported member does not exceed the footing thickness.

(c) Plain concrete footings supporting walls are permitted provided the footings have at least two continuous longitudinal reinforcing bars. Bars shall not be smaller than No. 4 and shall have a total area of not less than 0.002 times the gross cross-sectional area of the footing. A minimum of one bar shall be provided at the top and bottom of the footing. Continuity of reinforcement shall be provided at corners and intersections.

In detached one- and two-family dwellings three stories or less in height and constructed with stud-bearing walls, plain concrete footings with at least two continuous longitudinal reinforcing bars not smaller than No. 4 are permitted to have a total area of less than 0.002 times the gross cross-sectional area of the footing."

"Section 1909.4 of the California Building Code is amended to read as follows:

1909.4 Design. Structural plain concrete walls, footings and pedestals shall be designed for adequate strength in accordance with ACI 318, Section 22.4 through 22.8.

Exception: For Group R-3 occupancies and buildings or other occupancies less than two stories above grade plane of light-frame construction, the required edge thickness of ACI 318 is permitted to be reduced to 6 inches (152 mm), provided that the footing does not extend more than 4 inches (102 mm) on either side of the supported wall. This exception shall not apply to structural elements designed to resist seismic lateral forces for structures assigned to Seismic Design Category D, E or F."

"Section 2204.1.1 is added to Chapter 22 of the California Building Code to read as follows:

2204.1.1 Consumables for welding.

2204.1.1.1 Seismic Force Resisting System (SFRS) welds. All welds used in members and connections in the SFRS shall be made with filler metals meeting the requirements specified in AWS D1.8 Clause 6.3. AWS D1.8 Clauses 6.3.5, 6.3.6, 6.3.7 and 6.3.8 shall apply only to demand critical welds.

2204.1.1.2 Demand critical welds. Where welds are designated as demand critical, they shall be made with filler metals meeting the requirements specified in AWS D1.8 Clause 6.3."

"Section 2205.4 is added to the California Building Code to read as follows:

2205.4 AISC 341, Part I, Section 13.2 Members. Add Section 13.2f to read as follows:

13.2f. Member Types

The use of rectangular HSS are not permitted for bracing members, unless filled solid with cement grout having a minimum compressive strength of 3,000 psi (20.7 MPa) at 28 days. The effects of composite action in the filled composite brace shall be considered in the sectional properties of the system where it results in the more severe loading condition or detailing."

"Section 2304.9.1 and Table 2304.9.1 of the California Building Code are amended as follows:

2304.9.1 Fastener requirements. Connections for wood members shall be designed in accordance with the appropriate methodology in Section 2301.2. The number and size of fasteners connecting wood members shall not be less than that set forth in Table 2304.9.1. Staple fasteners in Table 2304.9.1 shall not be used to resist or transfer seismic forces in structures assigned to Seismic Design Category D, E or F.

Exception: Staples may be used to resist or transfer seismic forces when the allowable shear values are substantiated by cyclic testing and approved by the building official.

Add new footnote q to Table 2304.9.1.

q. Staples shall not be used to resist or transfer seismic forces in structures assigned to Seismic Design Category D, E or F."

"Section 2304.11.7 of the California Building Code is amended to read as follows:

2304.11.7 Wood used in retaining walls and cribs. Wood installed in retaining or crib walls shall be preservative treated in accordance with AWPA U1 (Commodity Specifications A or F) for soil and fresh water use. Wood shall not be used in retaining or crib walls for structures assigned to Seismic Design Category D, E or F."

"Section 2305.4 is added to the California Building Code to read as follows:

2305.4 Quality of Nails. In Seismic Design Category D, E or F, mechanically driven nails used in wood structural panel shear walls shall meet the same dimensions as that required for hand-driven nails, including diameter, minimum length and minimum head diameter. Clipped head or box nails are not permitted in new construction. The allowable design value for clipped head nails in existing construction may be taken at no more than the nail-head-area ratio of that of the same size hand-driven nails."

"Section 2305.5 is added to the California Building Code to read as follows:

2305.5 Hold-down connectors. In Seismic Design Category D, E or F, hold-down connectors shall be designed to resist shear wall overturning moments using approved cyclic load values or 75 percent of the allowable seismic load values that do not consider cyclic loading of the product. Connector bolts into wood framing shall require steel plate washers on the post on the opposite side of the anchorage device. Plate size shall be a minimum of 0.229 inch by 3 inches by 3 inches (5.82 mm by 76 mm by 76 mm) in size. Hold-down connectors shall be tightened to finger tight plus one half (1/2) wrench turn just prior to covering the wall framing."

"Tables 2306.2.1(3) and 2306.2.1(4) are added to the California Building Code, and Section 2306.2.1 of the California Building Code is amended, to read as follows:

2306.2.1 Wood structural panel diaphragms. Wood structural panel diaphragms shall be designed and constructed in accordance with AF&PA SDPWS. Wood structural panel diaphragms are permitted to resist horizontal forces using the allowable shear capacities set forth in Table 2306.2.1(1) or 2306.2.1(2). For structures assigned to Seismic Design Category D, E or F, the allowable shear capacities shall be set forth in Table 2306.2.1(3) or 2306.2.1(4). The allowable shear capacities in Table 2306.2.1(1) or 2306.2.1(2) are permitted to be increased 40 percent for wind design.

Wood structural panel diaphragms fastened with staples shall not used to resist seismic forces in structures assigned to Seismic Design Category D, E or F.

Exception: Staples may be used for wood structural panel diaphragms when the allowable shear values are substantiated by cyclic testing and approved by the building official.

Wood structural panel diaphragms used to resist seismic forces in structures assigned to Seismic Design Category D, E or F shall be applied directly to the framing members.

Exception: Wood structural panel diaphragm is permitted to be fastened over solid lumber planking or laminated decking, provided the panel joints and lumber planking or laminated decking joints do not coincide.

TABLE 2306.2.1(3)
ALLOWABLE SHEAR (POUNDS PER FOOT) FOR WOOD STRUCTURAL PANEL DIAPHRAGMS WITH
FRAMING OF DOUGLAS FIR-LARCH OR SOUTHERN PINE[a] FOR SEISMIC LOADING[f]
FOR STRUCTURES ASSIGNED TO SEISMIC DESIGN CATEGORY D, E OR F

PANEL GRADE	COMMON NAIL SIZE	MINIMUM FASTENER PENETRATION IN FRAMING (inches)	MINIMUM NOMINAL PANEL THICKNESS (inch)	MINIMUM NOMINAL WIDTH OF FRAMING MEMBERS AT ADJOINING PANEL EDGES AND BOUNDARIES[e] (inches)	BLOCKED DIAPHRAGMS				UNBLOCKED DIAPHRAGMS	
					Fastener spacing (inches) at diaphragm boundaries (all cases) at continuous panel edges parallel to load (Cases 3,4), and at all panel edges (Cases 5, 6)[b]				Fastener spaced 6" max. at supported edges[b]	
					6	4	2 ½[c]	2[c]	Case 1 (No unblocked edges or continuous joints parallel to load)	All other configurations (Cases 2, 3, 4, 5 and 6)
					(A) Fastener spacing (inches) at other panel edges (Cases 1,2,3 and 4)[b]					
					6	6	4	3		
Structural I Grades	8d (2 ½" x 0.131")	1 3/8	3/8	2	270	360	530	600	240	180
				3	300	400	600	675	265	200
	10d[d] (3" x 0.148")	1 1/2	15/32	2	320	425	640	730	285	215
				3	360	480	720	820	320	240
Sheathing, single floor and other grades covered in DOC PS1 and PS2	6d[e] (2" x 0.113")	1 1/4	3/8	2	185	250	375	420	165	125
				3	210	280	420	475	185	140
	8d (2 ½" x 0.131")	1 3/8		2	240	320	480	545	215	160
				3	270	360	540	610	240	180
	8d (2 ½" x 0.131")	1 3/8	7/16	2	255	340	505	575	230	170
				3	285	380	570	645	255	190
	8d (2 ½" x 0.131")	1 3/8	15/32	2	270	360	530	600	240	180
				3	300	400	600	675	265	200
	10d[d] (3" x 0.148")	1 1/2		2	290	385	575	655	255	190
				3	324	430	650	735	290	215
	10d[d] (3" x 0.148")	1 1/2	19/32	2	320	425	640	730	285	215
				3	360	480	720	820	320	240

TABLE 2306.2.1(3)–continued
ALLOWABLE SHEAR (POUNDS PER FOOT) FOR WOOD STRUCTURAL

PANEL DIAPHRAGMS WITH FRAMING OF DOUGLAS FIR-LARCH, OR SOUTHERN PINE[a] FOR SEISMIC LOADING[f] FOR STRUCTURES ASSIGNED TO SEISMIC DESIGN CATERGORY D, E OR F

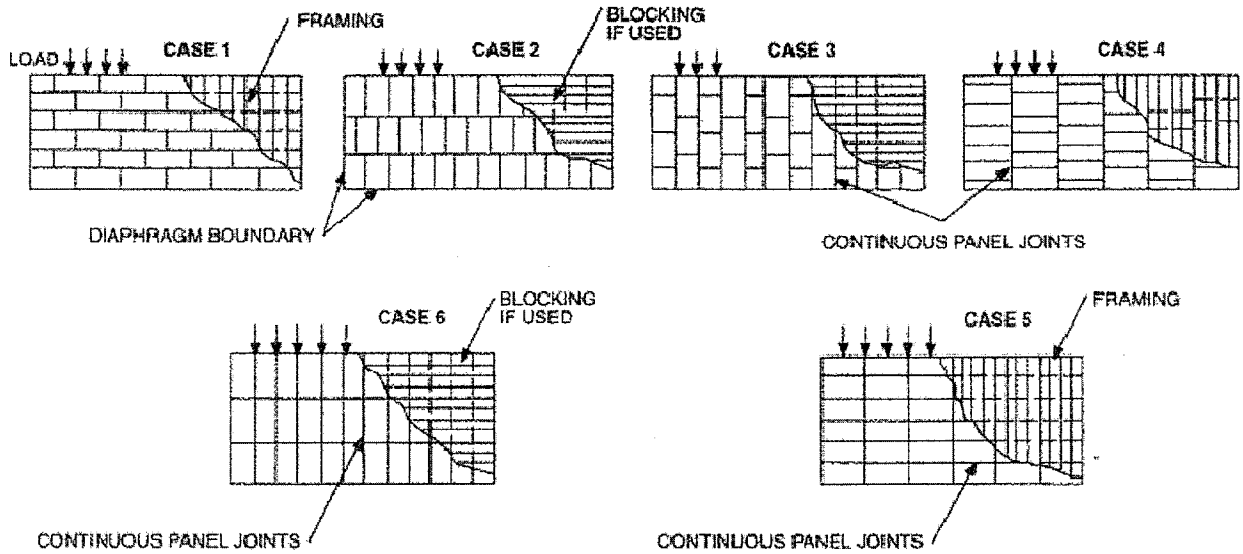

For SI: 1 inch = 25.4 mm, 1 pound per foot = 14.5939 N/m.

a. For framing of other species: (1) Find specific gravity for species of lumber in AF&PA NDS. (2) For nails find shear value from table above for nail size for actual grade and multiply value by the following adjustment factor: Specific Gravity Adjustment Factor = [1-(0.5-SG)], where SG = Specific Gravity of the framing lumber. This adjustment factor shall not be greater than 1.
b. Space fasteners maximum 12 inches o.c. along intermediate framing members (6 inches o.c. where supports are spaced 48 inches o.c.).
c. Framing at adjoining panel edges shall be 3 inches nominal or thicker, and nails at all panel edges shall be staggered where panel edge nailing is specified at 2 ½ inches o.c. or less.
d. Framing at adjoining panel edges shall be 3 inches nominal or thicker, and nails at all panel edges shall be staggered where both of the following conditions are met: (1) 10d nails having penetration into framing of more than 1 ½ inches and (2) panel edge nailing is specified at 3 inches o.c. or less.
e. The minimum nominal width of framing members not located at boundaries or adjoining panel edges shall be 2 inches.
f. For shear loads of normal or permanent load duration as defined by the AF&PA NDS, the values in the table above shall be multiplied by 0.63 or 0.56, respectively.

TABLE 2306.2.1(4)
ALLOWABLE SHEAR (POUNDS PER FOOT) FOR WOOD STRUCTURAL PANEL BLOCKED DIAPHRAGMS UTILIZING MULTIPLE ROWS OF FASTENERS (HIGH LOAD DIAPHRAGMS) WITH FRAMING OF DOUGLAS FIR-LARCH OR SOUTHERN PINE[a] FOR SEISMIC LOADING[b,f,g] FOR STRUCTURES ASSIGNED TO SEISMIC DESIGN CATERGORY D, E OR F

PANEL GRADE[c]	COMMON NAIL SIZE	MINIMUM FASTENER PENETRATION IN FRAMING (inches)	MINIMUM NOMINAL PANEL THICKNESS (inch)	MINIMUM NOMINAL WIDTH OF FRAMING MEMBERS AT ADJOINING PANEL EDGES AND BOUNDARIES[e] (inches)	LINES OF FASTENERS	BLOCKED DIAPHRAGMS			
						Cases 1 and 2[d]			
						Fastener Spacing Per Line at Boundaries (inches)			
						4		2 1/2	
						Fastener Spacing Per Line at Other Panel Edges (inches)			
						6	4	4	3
Structural I grades	10d common nails	1 1/2	15/32	3	2	605	815	875	1,150
				4	2	700	915	1,005	1,290
				4	3	875	1,220	1,285	1,395
			19/32	3	2	670	880	965	1,255
				4	2	780	990	1,110	1,440
				4	3	965	1,320	1,405	1,790
			23/32	3	2	730	955	1,050	1,365
				4	2	855	1,070	1,210	1,565
				4	3	1,050	1,430	1,525	1,800
Sheathing, single floor and other grades covered in DOC PS1 and PS2	10d common nails	1 1/2	15/32	3	2	525	725	765	1,010
				4	2	605	815	875	1,105
				4	3	765	1,085	1,130	1,195
			19/32	3	2	650	860	935	1,225
				4	2	755	965	1,080	1,370
				4	3	935	1,290	1,365	1,485
			23/32	3	2	710	935	1,020	1,335
				4	2	825	1,050	1,175	1,445
				4	3	1,020	1,400	1,480	1,565

For SI: 1 inch = 25.4 mm, 1 pound per foot = 14.5939 N/m.

a. For framing of other species: (1) Find specific gravity for species of lumber in AF&PA NDS. (2) For nails find shear value from table above for nail size for actual grade and multiply value by the following adjustment factor: Specific Gravity Adjustment Factor = [1-(0.5-SG)], where SG = Specific Gravity of the framing lumber. This adjustment factor shall not be greater than 1.

b. Fastening along intermediate framing members: Space fasteners a maximum of 12 inches on center, except 6 inches on center for spans greater than 32 inches.

c. Panels conforming to PS1 or PS 2.

d. This table gives shear values for Cases 1 and 2 as shown in Table 2306.2.1(3). The values shown are applicable to Cases 3, 4, 5 and 6 as shown in Table 2306.2.1(3), providing fasteners at all continuous panels edges are spaced in accordance with the boundary fastener spacing.

e. The minimum nominal depth of framing members shall be 3 inches nominal. The minimum nominal width of framing members not located at boundaries or adjoining panel edges shall be 2 inches.

f. High load diaphragms shall be subject to special inspection in accordance with Section 1704.6.1.

g. For shear loads of normal or permanent load duration as defined by the AF&PA NDS, the values in the table above shall be multiplied by 0.63 or 0.56, respectively.

TABLE 2306.2.1(4)–continued
ALLOWABLE SHEAR (POUNDS PER FOOT) FOR WOOD STRUCTURAL PANEL BLOCKED DIAPHRAGMS UTILIZING MULTIPLE ROWS OF FASTENERS (HIGH LOAD DIAPHRAGMS) WITH FRAMING OF DOUGLAS FIR-LARCH OR SOUTHERN PINE[a] FOR SEISMIC LOADING[b,f,g]
FOR STRUCTURES ASSIGNED TO SEISMIC DESIGN CATERGORY D, E OR F

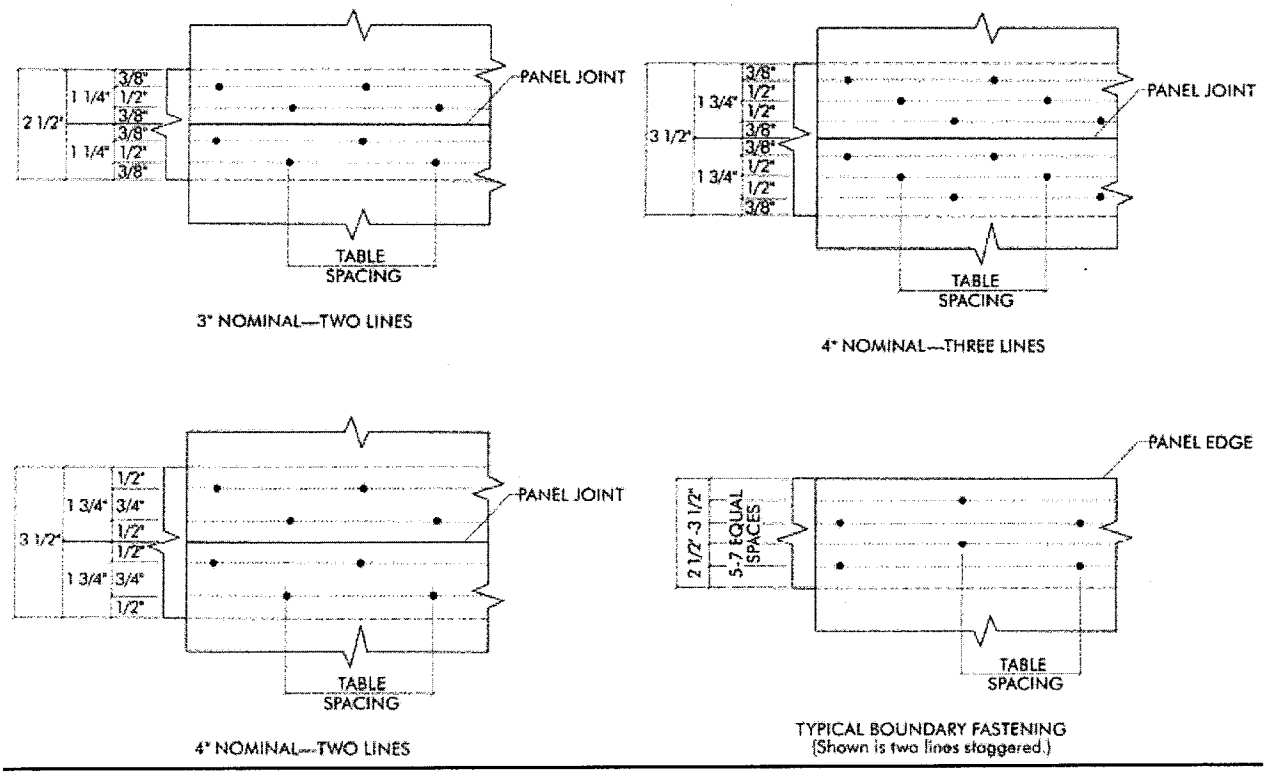

NOTE: SPACE PANEL END AND EDGE JOINT 1/8-INCH. REDUCE SPACING BETWEEN LINES OF NAILS AS NECESSARY TO MAINTAIN MINIMUM 3/8-INCH FASTENER EDGE MARGINS, MINIMUM SPACING BETWEEN LINES IS 3/8-INCH."

"Table 2306.3(2) is added to the California Building Code and Section 2306.3 and title of Table 2306.3 of the California Building Code are amended, to read as follows:

2306.3 Wood structural panel shear walls. Wood structural panel shear walls shall be designed and constructed in accordance with AF&PA SDPWS. Wood structural panel shear walls are permitted to resist horizontal forces using the allowable shear capacities set forth in Table 2306.3(1). For structures assigned to Seismic Design Category D, E or F, the allowable shear capacities shall be set forth in Table 2306.3(2). The allowable shear capacities in Table 2306.3(1) are permitted to be increased 40 percent for wind design.

Wood structural panel shear walls used to resist seismic forces in structures assigned to Seismic Design Category D, E or F shall not be less than 4 feet by 8 feet (1219 mm by 2438 mm), except at boundaries and at changes in framing. Wood structural panel thickness for shear walls shall not be less than 3/8 inch thick and studs shall not be spaced at more than 16 inches on center.

The maximum allowable shear value for three-ply plywood resisting seismic forces in structures assigned to Seismic Design Category D, E or F is 200 pounds per foot (2.92 kn/m). Nails shall be placed not less than 1/2 inch (12.7 mm) in from the panel edges and not less than 3/8 inch (9.5mm) from the edge of the connecting members for shear greater than 350 pounds per foot (5.11kN/m). Nails shall be placed not less than 3/8 inch (9.5 mm) from panel edges and not less than 1/4 inch (6.4 mm) from the edge of the connecting members for shears of 350 pounds per foot (5.11kN/m) or less.

Wood structural panel shear walls fastened with staples shall not used to resist seismic forces in structures assigned to Seismic Design Category D, E or F.

Exception: Staples may be used for wood structural panel shear walls when the allowable shear values are substantiated by cyclic testing and approved by the building official.

Wood structural panel shear walls used to resist seismic forces in structures assigned to Seismic Design Category D, E or F shall be applied directly to the framing members.

TABLE 2306.3(1)
ALLOWABLE SHEAR (POUNDS PER FOOT) FOR WOOD STRUCTURAL PANEL SHEAR WALLS WITH
FRAMING OF DOUGLAS FIR-LARCH OR SOUTHERN PINE[a] FOR WIND OR SEISMIC LOADING[b, h, i, j, l, m, n]

TABLE 2306.3(2)
ALLOWABLE SHEAR (POUNDS PER FOOT) FOR WOOD STRUCTURAL PANEL SHEAR WALLS WITH FRAMING OF DOUGLAS FIR-LARCH OR SOUTHERN PINE[a] FOR SEISMIC LOADING[b, h, j, k, l] FOR STRUCTURES ASSIGNED TO SEISMIC DESIGN CATEGORY D, E OR F

PANEL GRADE	MINIMUM NOMINAL PANEL THICKNESS (inch)	MINIMUM FASTENER PENETRATION IN FRAMING (inches)	ALLOWABLE SHEAR VALUE FOR SEISMIC FORCES PANELS APPLIED DIRECTLY TO FRAMING				
			COMMON NAIL SIZE	Fastener spacing at panel edges (inches)			
				6	4	3	2[e]
Structural I sheathing	3/8	1 3/8	8d (2½"x0.131" common)	200	200	200	200
	7/16	1 3/8	8d (2½"x0.131" common)	255	395	505	670
	15/32	1 3/8	8d (2½"x0.131" common)	280	430	550	730
		1 1/2	10d (3"x0.148" common)	340	510	665[f]	870
Sheathing, plywood siding[g] except Group 5 Species	3/8[c]	1 3/8	8d (2½"x0.113")	160	200	200	200

For SI: 1 inch = 25.4 mm, 1 foot = 25.4 mm, 1 pound per foot = 14.5939 N/m.

a. For framing of other species: (1) Find specific gravity for species of lumber in AF&PA NDS. (2) For nails find shear value from table above for nail size for actual grade and multiply value by the following adjustment factor: Specific Gravity Adjustment Factor = [1-(0.5-SG)], where SG = Specific Gravity of the framing lumber. This adjustment factor shall not be greater than 1.
b. Panel edges backed with 2-inch nominal or thicker framing. Install panels either horizontally or vertically. Space fasteners maximum 6 inches on center along intermediate framing members for 3/8-inch and 7/16-inch panels installed on studs spaced 24 inches on center. For other conditions and panel thickness, space fasteners maximum 12 inches on center on intermediate supports.
c. 3/8-inch panel thickness or siding with a span rating of 16 inches on center is the minimum recommended where applied direct to framing as exterior siding. For grooved panel siding, the nominal panel thickness is the thickness of the panel measured at the point of nailing.
d. Allowable shear values are permitted to be increased to values shown for 15/32-inch sheathing with same nailing provided (a) studs are spaced a maximum of 16 inches on center, or (b) panels are applied with long dimension across studs.
e. Framing at adjoining panel edges shall be 3 inches nominal or thicker, and nails shall be staggered where nails are spaced 2 inches on center or less.
f. Framing at adjoining panel edges shall be 3 inches nominal or thicker, and nails shall be staggered where both of the following conditions are met: (1) 10d (3"x0.148") nails having penetration into framing of more than 1-1/2 inches and (2) nails are spaced 3 inches on center or less.
g. Values apply to all-veneer plywood. Thickness at point of fastening on panel edges governs shear values.
h. Where panels applied on both faces of a wall and nail spacing is less than 6 inches o.c. on either side, panel joints shall be offset to fall on different framing members. Or framing shall be 3-inch nominal or thicker at adjoining panel edges and nails at all panel edges shall be staggered.
i. Where shear design values exceed 350 pounds per linear foot, all framing members receiving edge nailing from abutting panels shall not be less than a single 3-inch nominal member, or two 2-inch nominal members fastened together in accordance with Section 2306.1 to transfer the design shear value between framing members. Wood structural panel joint and sill plate nailing shall be staggered at all panel edges. See Section 4.3.6.1 and 4.3.6.4.3 of AF&PA SDPWS for sill plate size and anchorage requirements.
j. Galvanized nails shall be hot dipped or tumbled.

k. For shear loads of normal or permanent load duration as defined by the AF&PA NDS, the values in the table above shall be multiplied by 0.63 or 0.56, respectively.
l. The maximum allowable shear value for three-ply plywood resisting seismic forces is 200 pounds per foot (2.92 kn/m)."

"Section 2306.7 of the California Building Code are amended to read as follows:

2306.7 Shear walls sheathed with other materials. Shear walls sheathed with portland cement plaster, gypsum lath, gypsum sheathing or gypsum board shall be designed and constructed in accordance with AF&PA SDPWS. Shear walls sheathed with these materials are permitted to resist horizontal forces using the allowable shear capacities set forth in Table 2306.7. Shear walls sheathed with portland cement plaster, gypsum lath, gypsum sheathing or gypsum board shall not be used to resist seismic forces in structures assigned to Seismic Design Category E or F.

Shear walls sheathed with lath, plaster or gypsum board shall not be used below the top level in a multi-level building for structures assigned to Seismic Design Category D."

"Section 2308.3.4 of the California Building Code is amended to read as follows:

2308.3.4 Braced wall line support. Braced wall lines shall be supported by continuous foundations.

Exception: For structures with a maximum plan dimension not over 50 feet (15240 mm), continuous foundations are required at exterior walls only for structures not assigned to Seismic Design Category D, E or F."

"Section 2308.12.2 of the California Building Code is amended to read as follows:

2308.12.2 Concrete or masonry. Concrete or masonry walls and stone or masonry veneer shall not extend above the basement.

Exception: Stone and masonry veneer is permitted to be used in the first story above grade plane in Seismic Design Category D, provided the following criteria are met:

1. Type of brace in accordance with Section 2308.9.3 shall be Method 3 and the allowable shear capacity in accordance with Table 2306.4.1 shall be a minimum of 350 plf (5108 N/m).

2. The bracing of the first story shall be located at each end and at least every 25 feet (7620 mm) o.c. but not less than 45 percent of the braced wall line.

3. Hold-down connectors shall be provided at the ends of braced walls for the first floor to foundation with an allowable design of 2,100 pounds (9341 N).

4. Cripple walls shall not be permitted.

5. Anchored masonry and stone wall veneer shall not exceed 5 inches (127 mm) in thickness, shall conform to the requirements of Chapter 14 and shall not extend more than 5 feet (1524 mm) above the first story finished floor."

"Section 2308.12.4 and Table 2308.12.4 of the California Building Code are amended to read as follows:

2308.12.4 Braced wall line sheathing. Braced wall lines shall be braced by one of the types of sheathing prescribed by Table 2308.12.4 as shown in Figure 2308.9.3. The sum of lengths of braced wall panels at each braced wall line shall conform to Table 2308.12.4. Braced wall panels shall be distributed along the length of the braced wall line and start at not more than 8 feet (2438 mm) from each end of the braced wall line. Panel sheathing joints shall occur over studs or blocking. Sheathing shall be fastened to

studs, top and bottom plates and at panel edges occurring over blocking. Wall framing to which sheathing used for bracing is applied shall be nominal 2 inch wide [actual $1^1/_2$ inch (38 mm)] or larger members and spaced a maximum of 16 inches on center.

Exception: Braced wall panels required by Section 2308.12.4 may be eliminated when all of the following requirements are met:

1. One story detached Group U occupancies not more than 25 feet in depth or length.

2. The roof and three enclosing walls are solid sheathed with 15/32 inch nominal thickness wood structural panels with 8d common nails placed 3/8 inches from panel edges and spaced not more than 6 inches on center along all panel edges and 12 inches on center along intermediate framing members. Wall openings for doors or windows are permitted provided a minimum 4 foot wide wood structural braced panel with minimum height to length ratio of 2 to 1 is provided at each end of the wall line and that the wall line be sheathed for 50% of its length.

Wood structural panel sheathing shall be a minimum of 15/32 inch thick nailed with 8d common placed 3/8 inches from panel edges and spaced not more than 6 inches on center and 12 inches on center along intermediate framing members.

Braced wall panel construction types shall not be mixed within a braced wall line.

TABLE 2308.12.4
WALL BRACING IN SEISMIC DESIGN CATEGORIES D AND E
(Minimum Length of Wall Bracing per each 25 Linear Feet of Braced Wall Line [a])

CONDITION	SHEATHING TYPE[b]	$S_{DS} < 0.50$	$0.50 \leq S_{DS} < 0.75$	$0.75 \leq S_{DS} \leq 1.00$	$S_{DS} > 1.00$
One Story	G-P[c]	10 feet 8 inches	14 feet 8 inches	18 feet 8 inches	25 feet 0 inches
	S-W[d]	5 feet 4 inches	8 feet 0 inches	9 feet 4 inches	12 feet 0 inches

For SI: 1 inch = 25.4 mm, 1 foot = 304.8 mm.

a. Minimum length of panel bracing of one face of the wall for S-W sheathing shall be at least 4'-0" long or both faces of the wall for G-P sheathing shall be at least 8'-0" long; h/w ratio shall not exceed 2:1. For S-W panel bracing of the same material on two faces of the wall, the minimum length is permitted to be one-half the tabulated value but the h/w ratio shall not exceed 2:1 and design for uplift is required.
b. G-P = gypsum board, portland cement plaster or gypsum sheathing boards; S-W = wood structural panels.
c. Nailing as specified below shall occur at all panel edges at studs, at top and bottom plates and, where occurring, at blocking:
For 1/2-inch gypsum board, 5d (0.113 inch diameter) cooler nails at 7 inches on center;
For 5/8-inch gypsum board, No 11 gage (0.120 inch diameter) cooler nails at 7 inches on center;
For gypsum sheathing board, 1-3/4 inches long by 7/16-inch head, diamond point galvanized nails at 4 inches on center;
For gypsum lath, No. 13 gage (0.092 inch) by 1-1/8 inches long, 19/64-inch head, plasterboard at 5 inches on center;
For Portland cement plaster, No. 11 gage (0.120 inch) by $1^1/_2$ inches long, $^7/_{16}$- inch head at 6 inches on center;
d. S-W sheathing shall be a minimum of 15/32" thick nailed with 8d common placed 3/8 inches from panel edges and spaced not more than 6 inches on center and 12 inches on center along intermediate framing members."

"Section 2308.12.5 of the California Building Code is amended to read as follows:

2308.12.5 Attachment of sheathing. Fastening of braced wall panel sheathing shall not be less than that prescribed in Table 2308.12.4 or 2304.9.1. Wall sheathing shall not be attached to framing members by adhesives. Staple fasteners in Table 2304.9.1 shall not be used to resist or transfer seismic forces in structures assigned to Seismic Design Category D, E or F.

Exception: Staples may be used to resist or transfer seismic forces when the allowable shear values are substantiated by cyclic testing and approved by the building official.

All braced wall panels shall extend to the roof sheathing and shall be attached to parallel roof rafters or blocking above with framing clips (18 gauge minimum) spaced at maximum 24 inches (6096 mm) on center with four 8d nails per leg (total eight 8d nails per clip). Braced wall panels shall be laterally braced at each top corner and at maximum 24 inch (6096 mm) intervals along the top plate of discontinuous vertical framing."

"Section 3111 is added to Chapter 31 of the California Building Code to read as follows:

3111 Tents, Awnings, Canopies, And Umbrellas.

3111.1 Permits Required. No tent, awning, or canopy in excess of forty (40) square feet shall be erected or maintained on private property within the city without first obtaining a permit from the city building official. The permit fee shall be as established by resolution of the city council. Unless otherwise authorized by the city building official, no tent, awning, or canopy in excess of forty (40) square feet shall be erected or maintained on private property within the city in excess of ten (10) days.

3111.2 Temporary Use. Tents, awnings, or canopies of cloth or pliable material shall be erected only as temporary shelters from the rain or sun and shall not be used as permanent structures or additions to the main building. Except as authorized by the city council or as otherwise specified in the municipal code, such structures shall not be used for the purpose of sheltering goods, wares, or merchandise or for the purpose of engaging in business in any manner thereunder. Such structures shall be permitted only if so constructed and situated, so that in the opinion of the city building official, the structure will not cause a fire hazard or in any other way be dangerous to life, limb, or property.

Exception: The provisions of this section shall not prohibit the covering of materials stored in a yard with fire-retardant tarpaulins.

3111.3 Restrictions And Requirements. Any tent, awning, or other pliable material for which a permit is required under this section shall comply with the following:

(1) All city code provisions and regulations shall be complied with;

(2) An electrical permit shall be obtained by a duly licensed electrical contractor for any wiring or lighting to be installed;

(3) All plastics used shall display approval by the office of the fire marshal of the state;

(4) All cloth used shall be incombustible or flame-retardant. Flame-retardant materials shall display the name of the treating agency, the date of the flame-retardant application, the type of flame-retardant used, and the flame-retardant certificate;

(5) A testing flap shall be provided for the use of the fire department inspector;

(6) Two (2) means of egress shall be provided for tents or canopies having an area of 1,000 square feet or more. Such means of egress shall be not less than five (5') feet in width and located not

less than one-fifth ($^1/_5$) of the perimeter of the structure apart. Each means of egress shall be provided with exit signs as required by this code.

3111.4 Umbrellas. No open umbrella in excess of seven (7') feet in diameter shall be permitted in the commercial and industrial zones. Any umbrella having a diameter of seven (7') feet or less shall be securely fastened to a movable base approved by the city building official. Such umbrella shall at all times be maintained in a position and in such a manner as shall not constitute a fire hazard to persons or property, either from fire or wind."

"Section 3201.5 is added to the California Building Code to read as follows:

3201.5 No part of any structure, or any appendage thereto, shall project beyond the property line of the building site, except as specified in this chapter and elsewhere in the Beverly Hills Municipal Code."

"Section 3201.6 is added to the California Building Code to read as follows:

3201.6 Structures or appendages regulated by this code shall be constructed of materials as permitted by this code."

"Section 3202 of the California Building Code is hereby deleted."

"A new Section 3202 is added to the California Building Code to read as follows:

3202 Below Grade. Portions of buildings or structures below grade shall not project beyond the property line of the building site except as otherwise provided in the Beverly Hills Municipal Code."

"Section 3203 is added to Chapter 32 of the California Building Code to read as follows:

3203 Above Grade.

3203.1 Streets. In a commercial or industrial zone those portions of buildings, structures, or appendages thereto that may project beyond property lines adjacent to a street are as follows:

(1) Marquees;

(2) Canopies;

(3) Cornices;

(4) Awnings;

(5) Signs; and

(6) When approved by the architectural commission, flagpoles, lights, and other ornamental projections.

3203.2 Alleys In A Commercial Or Industrial Zone. Projections beyond property lines adjacent to an alley in a commercial or industrial zone shall not be permitted.

3203.3 Streets And Alleys In Residential Zones. Projections beyond property lines adjacent to streets and alleys in residential zones shall not be permitted."

"Section 3204 is added to the California Building Code to read as follows:

3204 - Marquees and Canopies.

3204.1 General. For the purposes of this section, a marquee or canopy shall include any object or decoration attached to or a part of such marquee or canopy.

3204.2 Projection And Clearance. A marquee or canopy shall project not more than two-thirds ($^2/_3$) of the distance from the property line to the curb line and shall be no less than eight (8') feet above the ground or pavement below.

3204.3 Thickness. The maximum height or thickness of a marquee or canopy measured vertically from its lowest to its highest point shall not exceed nine (9') feet.

3204.4 Construction. A marquee or canopy shall be supported entirely by the building.

3204.5 Roof Construction. The roof or any part thereof may be a skylight provided wire glass or laminated glass that complies with section 2405 is used no less than one-fourth ($^1/_4$") inch thick with no single pane more than eighteen (18") inches wide. Every roof and skylight of a marquee or canopy shall be sloped to downspouts which shall conduct any drainage from the marquee under the sidewalk to the curb.

3204.6 Location Prohibited. Every marquee or canopy shall be so located as not to interfere with the operation of any exterior standpipe or to obstruct the clear passage of stairways or exits from the building or the installation or maintenance of electroliers."

"Section 3205 is added to the California Building Code to read as follows:

3205 - Awnings.

3205.1 Definition. For the purposes of this section, the term "awning" is defined as follows:

Awning is a temporary shelter supported entirely from the exterior wall of a building.

3205.2 Construction. Awnings shall have noncombustible frames but may have combustible coverings.

3205.3 Projection. Awnings may extend over public property not more than seven (7') feet from the face of a supporting building, but no portion shall extend nearer than two (2') feet to the face of the nearest curb line measured horizontally. In no case shall the awning extend over public property greater than two-thirds ($^2/_3$) of the distance from the property line to the nearest curb in front of the building site.

3205.4 Height. Awnings shall not exceed nine (9') feet in height above the lowest extremity of the awning.

3205.5 Clearances. All portions of any awning shall be at least eight (8') feet above any public walkway.

Exception: Any valance attached to an awning shall not project above the roof of the awning at the point of attachment and shall not extend more than twelve (12") inches below the roof of the awning at the point of attachment, but in no case shall any portion of a valance be less than seven (7') feet in height above a public way."

"Section 3206 is added to the California Building Code to read as follows:

3206 - Doors. Doors, either fully opened or when opening, shall not project beyond the property line. Power-operated doors and their guide rails shall not project over public property."

"Section 3207 is added to the California Building Code to read as follows:

3207 Signs. Signs may project beyond the property line as provided in Chapter 4 of Title 10 of the Beverly Hills Municipal Code."

"Section 3208 is added to the California Building Code to read as follows:

3208 Flagpoles. Flagpoles, when permitted, shall project no more than two-thirds ($^2/_3$) of the distance from the property line to the curb line and shall not be less than twelve (12') feet above the ground or pavement below, including the flag."

"Section 3209 is added to the California Building Code to read as follows:

3209 Cornices, Lights, And Other Ornamental Projections. Cornices, lights, and other ornamental projections, when permitted, shall project not more than two (2') feet beyond the property line and shall not be less than eight (8') feet above the ground or pavement below."

"Section 3306.4 of the California Building Code is hereby amended by adding a sentence at the end of section 3306.4 to read as follows:

3306.4 *** Railings shall be painted, and maintained painted, in a neutral color."

"Section 3306.5 of the California Building Code is hereby amended by adding a sentence at the end of section 3306.5 to read as follows:

3306.5 *** Barriers and fences shall be painted and maintained painted in a neutral color."

"Section 3306.7 of the California Building Code is hereby amended by adding a sentence at the end of the first paragraph of section 3306.7 to read as follows:

3306.7 *** The space under the canopy over the walkway and the approaches thereto shall be kept well lighted with artificial lighting continuously between sunset and sunrise. An automatic lighting system shall be used."

"Chapter 36 is added to the California Building Code to read as follows:

CHAPTER 36. HILLSIDE BUILDING DISTRICT

3601 Hillside Building District Established. There is hereby established a hillside building district in the area designated in the "hillside building district map" as set forth in this code. The specific regulations in this chapter shall apply to the hillside building district.

3602 Geological And Foundation Investigations Required.

3602.1 Investigations Required. Prior to issuing a building permit for any new building, structure, or addition to an existing building or structure on a site in the hillside building district where slopes exceed three (3) horizontal to one vertical or where unstable geological or soil conditions are known or suspected to exist, a geological and foundation investigation shall be conducted, and a report shall be submitted to the city building official by a geologist and a civil engineer registered in the state; provided, however, the city building official may issue a building permit for an addition to an existing building or structure without a geological and foundation inspection if such addition is located so as not to be affected by slopes exceeding three (3) horizontal to one vertical.

3602.2 Prerequisites To Permit Issuance. Where a geological and foundation investigation required by this section indicates the presence of a geological hazard, and evidence indicates mitigating measures can offset or eliminate the hazard, the city building official shall issue a building permit provided all

recommended mitigating measures are designed and incorporated into the proposed project and all other requirements of this code and the municipal code are met.

3602.3 Denial Of Permits. Where a geological and foundation investigation indicates the presence of a geological hazard, and evidence indicates no mitigating measures can offset or eliminate the hazard, the city building official shall deny the issuance of a building permit for the proposed project.

3603 Foundation Embedment. Where foundations are placed on natural slopes or uncompacted fill, the foundation shall extend through the natural overburdened or uncompacted fill and rest in undisturbed, unweathered, firm natural base materials. Foundations shall be designed to resist any vertical or lateral movement or overburden or fill.

3604 Yard Drainage. Surface runoff flowing or collecting on building pads and yards shall be directed to catch basins and non-erosive devices to reduce the hazard of erosion, subsidence, or slippage of the surrounding property. Such devices shall conduct any surface runoff to a street or alley and shall be designed to accommodate a three (3") inch per hour rainfall.

3605 Gutters. Eave gutters and downspouts on structures located in the hillside building district shall be provided to collect all roof water and deposit it in non-erosive devices to a street or alley. Gutters, downspouts, and non-erosive devices shall be sized to accommodate a three (3") inch per hour rainfall."

"Chapter 37 is added to the California Building Code to read as follows:

CHAPTER 37. ADDITIONAL REQUIREMENTS IN CERTAIN AREAS

3701 Construction Requirements In Commercial And Industrial Zones.

3701.1 Except as provided in section 3702.2, all buildings and structures hereafter erected, constructed, or moved within any commercial or industrial zone shall be of type I, II-A, or III-A construction, and shall comply with other provisions of this code.

3701.2 Occupancies with a floor area of fifteen hundred (1500) square feet or less, and open parking garages shall comply with either section 3701.1 or shall be of type II-B construction.

3702 Walls And Fences In Commercial And Industrial Zones. Any wall or fence built, constructed, or erected within a commercial or industrial zone shall be of noncombustible material.

Exceptions:

(1) Protective walls or fences erected for the duration of a construction, demolition or alteration operation may be constructed of combustible material.

(2) A temporary wall or fence erected to close the front or rear portion of a business building pending occupancy may be constructed of combustible material provided such opening is filled entirely. Such enclosure shall be permitted to be used for a period not exceeding one year.

3703 Special Regulations In Very High Fire Hazard Severity Zone. The following special regulations shall be applicable to all building and structures used for human occupancy in the very high fire hazard severity zone as defined in the city's fire code.

3703.1 Exterior walls and eaves shall be of one-hour fire-resistive construction.

Exception: Exterior walls products listed in the Cal-Fire Wildland Urban Interface (WUI) Products – Building Materials Listing Program. Listed products must comply with State Fire Marshal Standard 12-7A-1.

3703.2 Buildings or structures constructed over slopes shall have all under-floor and deck areas enclosed, and such enclosures shall be of one-hour fire resistive construction."

"Appendix Section G1102 is added to Appendix G of the California Building Code to read as follows:

SECTION G1102 SPECIAL FLOODING REQUIREMENTS

G1102.1 Purpose: The provisions of this division are intended to promote public safety and welfare by reducing the risk of flood damages in areas prone to flooding.

G1102.2 Scope: Buildings and structures erected in areas prone to flooding shall be constructed as required by the provisions of this division. The base flood elevation shown on the approved flood hazard map is the minimum elevation used to define areas prone to flooding, unless records indicate a higher elevation is to be used. The flood-prone areas are defined in the jurisdiction's floodplain management ordinance.

G1102.3 Definitions: For the purpose of this division, certain terms are defined as follows:

Base Flood Elevation is the depth or peak elevation of flooding, including wave height, having 1 percent chance of being equaled or exceeded in any given year. Base Flood Elevation is the elevation 22.5 inches above adjacent grade in area 1 and 16 inches above adjacent grade in area 2 as determined by the 100 year storm map on file in the department of building and safety.

Flood Hazard Map is a map published by an approved agency that defines the flood boundaries, elevations and insurance risk zones as determined by a detailed flood insurance study.

Hazard Zones are areas that have been determined to be prone to flooding and are classified as either flood hazard zones, A zones, or coastal high-hazard zones, V zones, in accordance with section 1612. Hazard Zones are areas which have been determined by the city to be prone to flooding and are classified as flood hazard zones.

G1102.4 Protection Of Mechanical And Electrical Systems. New or replacement electrical equipment and heating, ventilating, air conditioning and other service facilities shall be either placed above the base flood elevation or protected to prevent water from entering or accumulating within the system components during floods up to the base flood elevation. Installation of electrical wiring and outlets, switches, junction boxes and panels below the base flood elevation shall conform to the provisions of the electrical code for such items in wet locations.

G1102.5 Flood Hazard Zones - A Zones.

G1102.5.1 General: Areas that have been determined as prone to flooding by not subject to wave heights of more than 3 feet (914 mm) are designated as flood hazard zones. Building or structures erected within a flood hazard zone shall have the lowest floor, including basement floors, located at or above the base flood elevation.
Exceptions:

1. Except for group R occupancies, any occupancy may have floors below the base flood elevation in accordance with this section.

2. Except for group R occupancies, floors of buildings or structures which are used only for building access, exits, foyers, storage and parking garages may be below the base flood elevation.

G1102.5.2 Enclosures Below Base Flood Elevation. Enclosed spaces below the base flood elevation shall not be used with the exception of building access, means of egress, foyers, storage and parking garages. Enclosed spaces shall be provided with vents, valves or other openings that will automatically

equalize the lateral pressure of waters acting on the exterior wall surfaces. The bottom of the openings shall not be higher than 12 inches (305 mm) above finish grade. A minimum of two openings per building or one opening for each enclosure below the base flood elevation, whichever is greater, shall be provided. The total net area of such openings shall not be less than 4 square feet (0.37 m^2) or 1 square inch for every square foot (0.007 m^2 for every 1 m^2) of enclosed area, whichever is greater.

G1102.5.3 Flood-Resistant Construction. Buildings or structures of any occupancy other than group R may, in lieu of meeting the elevation provisions, be erected with floors usable for human occupancy below the base flood elevation, provided the following conditions are met:

1. Space below the base flood elevation shall be constructed with exterior walls and floors that are impermeable to the passage of water.

2. Structural components subject to hydrostatic and hydrodynamic loads during the occurrence of flooding to the base flood elevation shall be capable of resisting such forces, including the effect of buoyancy.

3. Openings below the base flood elevation shall be provided with watertight closures and shall have adequate structural capacity to support flood loads acting upon closure surfaces.

4. Floor and wall penetrations for plumbing, mechanical and electrical systems shall be made watertight to prevent flood water seepage through spaces between penetration and wall construction materials. Sanitary sewer and storm drainage systems that have openings below the base flood elevation shall be provided with closure devices to prevent backwater flow during conditions of flooding.

G1102.5.4 Plan Requirements For Flood-Resistant Construction. When buildings or structures are to be constructed in accordance with this section, an architect or engineer licensed by the state to practice as such shall prepare plans showing details of the floor wall and foundation support components. Calculations and approved technical data used to comply with the conditions of this section shall also be provided.

G1102.5.5 Elevation Certification. A land surveyor, architect or engineer licensed by the state to practice as such shall certify that the actual elevation in relations to mean sea level of the lowest floor, if in a flood hazard zone, or the bottom of the lowest horizontal structural member if in a coastal high-hazard zone, are at or above the minimum elevation when required by the provisions of this section."

"Subsection 2 of Appendix Section J103.2 of the California Building Code is deleted."

"Appendix Section J104.3.of the California Building Code is amended by adding a sentence at the end of section J104.3 to read as follows:

J104.3 In addition, the soils report shall specify whether methane hazard exists on site. If methane hazard exists, a licensed architect, registered engineer or geologist shall submit a report to the satisfaction of the city building official which includes, but is not limited to, the results of the testing procedure and the proposed mitigation measures."

"Appendix Section J104.5 is added to Appendix J of the California Building Code to read as follows:

J104.5 Slope Failure Reports. In addition to any other requirements set forth in this chapter, for class I slope failures, the permit applicant shall submit to the building official a combined soils engineering and engineering geology report to address its cause and provide recommended repair methods. For class II slope failures, the permit applicant shall submit to the building official an engineering geology report to address its cause and provide recommended repair methods. For class III slope failure, unless there exist other conditions which, in the opinion of the building official, require the submission of soils engineering or engineering geology reports, the permit applicant shall not be required to submit such reports."

"Appendix Section J112 is added to Appendix J of the California Building Code to read as follows:

Section J112 Hazardous Conditions.

J112.1 Notices. Whenever the city building official determines by inspection that any existing excavation or fill or other condition of the soil from any cause has become a menace to life or limb, or endangers property, or affects the safety, usability, or stability of a public way, the owner of the property upon which such excavation, fill, or other condition of the soil is located, or other person or agent in control of such property, upon receipt of a notice in writing from the city building official so to do, within ninety (90) days after the date of such written notice, shall repair and reconstruct such excavation, fill, or other condition of the soil so that it conforms to the requirements of this chapter, or otherwise repair, strengthen, or eliminate such excavation, fill, or other condition of the soil in a manner satisfactory to the city building official to eliminate the danger. The city building official may designate a shorter period of time for elimination of the condition if an imminent and immediate hazard is found to exist.

J112.2 Reports. In the event the owner or other person or agent in control of such property fails to comply with the notice to repair or reconstruct such excavation, fill, or other condition of the soil, the city building official may submit a written report to council requesting authorization to proceed in performing the work specified in such written notice, and assess the costs of such work as a special assessment against the property.

J112.3 Hearings. Upon the receipt of such a report, the council may fix a time, date, and place for a hearing on such report and any protests or objections thereto. At least ten (10) days prior to the hearing a notice of the hearing shall be served by certified mail, postage prepaid, addressed to the owner of the property at his last known address, and to each holder of any security interest in the real property.

J112.4 Authorizing Work. On conclusion of the hearing, the council may by resolution confirm the report of the city building official and order the repair or reconstruction of such excavation, fill, or other condition of the soil by the city.

J112.5 Levy And Assessment. Upon the completion of the repair or reconstruction of such excavation, fill, or other condition of the soil by the city, the city building official will transmit a final statement of the total direct and indirect costs of such work to the council, which will by resolution fix the time, date, and place for hearing such statement in accordance with the provisions of this code. Upon the date fixed for the hearing, the council will hear the report of the city building official, together with any objections or protests thereto, and may then by resolution order the costs of the work to be paid and levied as a special assessment against the property. The city clerk will then transmit a copy of the resolution to the county auditor-collector directing that the amount designated to be collected concurrently with the next installment of real property taxes on the property involved."

"Appendix Section J113 is added to Appendix J of the California Building Code to read as follows:

SECTION J113 BONDS.

J113.1 Bonds Required. The city building official may require the posting of a bond prior to issuance of a permit where the nature of the work, if commenced and allowed to remain in an uncompleted state, would create a hazard to human life or endanger adjoining or other property, any street or street improvement, or any other public property. The bond shall be in an amount sufficient to cover the cost of eliminating any dangerous condition or geological hazard if the project is not properly performed or is not completed in a timely manner. The bond shall comply with the provisions of Title 3 of Chapter 4 of the Beverly Hills municipal code.

J113.2 Right Of Entry. In the event of any default in any performance of any term or condition of the permit for the work, the surety, or any person employed or engaged on its behalf, or the city building official, or any person employed or engaged on his behalf, shall have the right to go upon the premises to complete the required work or make it safe.

J113.3 Interference Prohibited. No person shall interfere with or obstruct the ingress or egress to or from any such premises by any authorized representative or agent of any surety or of the city engaged in completing the work required to be performed under the permit or in complying with the terms or conditions thereof."

Section 5. A new Article 2A "California Residential Code" is hereby added to Chapter 1 of Title 9 of the Beverly Hills Municipal Code to read as follows:

"Article 2A. California Residential Code

9-1-2A01: ADOPTION OF CALIFORNIA RESIDENTIAL CODE: The 2010 Edition of the California Residential Code, excluding all appendices, is hereby adopted by reference, subject to the amendments set forth in Section 9-1-2A02 of this article, and the same shall be known and cited as the Residential Code of the City of Beverly Hills.

9-1-2A02: AMENDMENTS TO CALIFORNIA RESIDENTIAL CODE

The California Residential Code adopted pursuant to Section 9-1-2A01 is hereby amended as follows:

"Section R101.1 of the California Residential Code is amended to read as follows:

R101.1 Title. For the city of Beverly Hills, these regulations shall be known as the Beverly Hills Residential Code. The provisions contained in the California Residential Code of the (compiled) California Building Standards Code as defined in section 18910, Health and Safety Code, may be cited as such and are referred to hereafter as 'these regulations' or 'these building standards' or 'this code.' These regulations shall also be collectively known as the 'California Residential Code' as amended by the Beverly Hills Municipal Code."

"Section R301.1.3.2 of the California Residential Code is amended to read as follows:

R301.1.3.2 Woodframe structures. The building official shall require construction documents to be approved and stamped by a California licensed architect or engineer for all dwellings of woodframe construction more than two stories and basement in height located in Seismic Design Category A, B or C. Notwithstanding other sections the law, the law establishing these provisions is found in Business and Professions Code Section 5537 and 6737.1.

The building official shall require construction documents to be approved and stamped by a California licensed architect or engineer for all dwellings of woodframe construction more than one story in height located in Seismic Design Category D_0, D_1, D_2 or E."

"Section R301.1.4 is added to the California Residential Code to read as follows:

R301.1.4 Seismic Design Provisions for Buildings Constructed On Or Into Slopes Steeper Than One Unit Vertical In Three Units Horizontal (33.3 Percent Slope). The design and construction of new buildings and additions to existing buildings when constructed on or into slopes steeper than one unit vertical in three units horizontal (33.3percent slope) shall comply with Section 1613.15 of the California Building Code."

"Subsections 1, 3 and 5 of Section R301.2.2.2.5 of the California Residential Code are amended to read as follows:

1. When exterior shear wall lines or braced wall panels are not in one plane vertically from the foundation to the uppermost story in which they are required.

3. When the end of a braced wall panel occurs over an opening in the wall below.

5. When portions of a floor level are vertically offset."

"Section R301.2.2.3.5.1 is added to the California Residential Code to read as follows:

R301.2.2.3.5.1 AISI S230, Section B1. Modify AISI S230, Section B1 to read as follows:

Where No. 8 screws are specified, the required number of screws in a steel-to-steel connection shall be permitted to be reduced in accordance with the reduction factors in Table B1-1 when larger screws are used or when the sheets of steel being connected is thicker than 33 mils (0.84mm). When applying the reduction factor, the resulting number of screws shall be rounded up."

"Section R313.1 of the California Residential Code is amended to read as follows:

R313.1 Automatic Fire Sprinkler Systems Approved automatic sprinkler systems in new buildings and structures shall be required for all occupancies, except U occupancies which are sheds that are less than five hundred (500) square feet.

Approved automatic sprinkler systems shall be required in all existing buildings if: (i) additions, alterations or repairs are made within any twelve (12) month period which exceed fifty percent (50%) of the value of such existing building, (ii) an addition is constructed which exceeds fifty percent (50%) of the square footage of the existing building, or (iii) an addition of more than five thousand (5,000) square feet is constructed.

R313.1.1 Townhouse automatic fire sprinkler systems. An automatic residential fire sprinkler system shall be installed in townhouses.

R313.1.2 Design and installation. Automatic residential fire sprinkler systems for townhouses shall be designed and installed in accordance with Section R313.3, NFPA 13 or NFPA 13D."

"Section R313.2 of the California Residential Code is amended to read as follows:

R313.2 One- and two-family dwellings automatic fire systems. An automatic residential fire sprinkler system shall be installed in one- and two- family dwellings.

Exception: An automatic residential fire sprinkler system shall not be required for additions or alterations to existing buildings that are not already provided with an automatic residential sprinkler system.

R313.2.1 Design and installation. Automatic residential fire sprinkler systems shall be designed and installed in accordance with Section R313.3, NFPA 13, or NFPA 13D."

"Section R313.3.1 of the California Residential Code is amended to read as follows:

R313.3.1 General. Where installed, residential fire sprinkler systems, or portions thereof, shall be in accordance with NFPA 13D, NFPA 13, or Section R313.3, which shall be considered equivalent to NFPA 13D. Section R313.3 shall apply to stand-alone and multipurpose wet-pipe sprinkler systems that do not include the use of antifreeze. A multipurpose fire sprinkler system shall supply domestic water to both fire sprinklers and plumbing fixtures. A stand-alone sprinkler system shall be separate and independent from the water distribution system."

"Section R313.3.1.1 of the California Residential Code is amended to read as follows:

R313.3.1.1 Required sprinkler locations. Sprinklers shall be installed to protect all areas of a dwelling unit."

"Section R314.3.1 of the California Residential Code is amended to read as follows:

R314.3.1 Alterations, repairs and additions. When alterations, repairs or additions requiring a permit occur, or when one or more sleeping rooms are added or created in existing dwellings, the dwelling shall be equipped with smoke alarms located as required for new dwellings. Smoke alarms complying with section R314 shall be installed in all new and existing dwellings."

"Section R314.4 of the California Residential Code is amended to read as follows:

R314.4 Power source. Smoke alarms shall receive their primary power from the building wiring when such wiring is served from a commercial source, and when primary power is interrupted, shall receive power from a battery. Smoke alarms shall emit a signal when the batteries are low. Wiring shall be permanent and without a disconnecting switch other than those required for overcurrent protection. Smoke alarms shall be interconnected.

Exceptions:

1. Smoke alarms shall be permitted to be battery operated when installed in buildings without commercial power.
2. Interconnection of smoke alarms in existing areas shall not be required where the *alterations* or repairs do not result in the removal of interior wall or ceiling finishes exposing the structure, unless there is an *attic,* crawl space or *basement* available which could provide access for hard wiring and interconnection without the removal of interior finishes."

"Section R314.5 of the California Residential Code is hereby deleted."

"Section R314.6 of the California Residential Code is hereby deleted."

"Section R319.1 of the California Residential Code is amended to read as follows:

R319.1 Address numbers. Buildings shall have approved address numbers, building numbers or approved building identification placed in a position that is plainly legible and visible from the street or road fronting the property. Address numbers shall be Arabic numbers or alphabetical letters. Where access is by means of a private road and the building address cannot be viewed from the public way, a monument, pole or other sign or means shall be used to identify the structure. New and existing buildings shall be provided with *approved* address numbers or letters. Each character shall be a minimum 4 inches (102mm) high for residential properties with a minimum stroke width of 0.5 inch (12.7mm) wide. They shall be installed on a contrasting background and be plainly visible from the street or road fronting the property.

R319.1.1 Street Numbering. The following provisions shall be applicable to street numbering:

1. On the east-west axis, all numbers shall sequence, as much as practicable, with the contiguous east-west streets abutting Los Angeles city and County.
2. On the north-south axis, streets north of Wilshire Boulevard shall be designated with the prefix "North," and streets south of Wilshire Boulevard shall be designated with the prefix "South."
3. Numbers on the northerly and westerly sides of all streets shall end in an odd digit, while numbers on the southerly and easterly sides shall end in an even digit.

4. The city building official shall designate street address numbers, and shall maintain on file a map entitled "Official Numbering Map of The City of Beverly Hills" which shall depict the official designation of the numbers assigned to property fronting on the various streets in the city.

R319.1.2 Building Numbering Requirements. The entrances to all buildings from public streets shall have the numbers designated by the city building official conspicuously displayed near the entrance of the structure in a manner that they are in plain view from the street. Structures which have access from a rear alley, in addition to the numbering required by this section, shall for purposes of emergency response, provide numbering and street identification which is clearly visible from the rear alley access in accordance with the following provisions:

1. The name of the street and street number as designated by the city building official shall be visible from the alley and located adjacent to the alley access to the structure.
2. The address markings shall be placed five (5') feet above the alley surface, with numbers four (4") inches in height and letters two (2") inches in height, and placed upon the structure, wall, fence, gate, or other appropriate surface so as to be clearly visible.
3. If any property owner shall fail to provide the address identification required by this subsection on the premises, the city may provide and affix such address identification markings at no cost to the property owner. Where identification markings are provided by the city, no person shall remove, deface, or modify such markings without the written authorization of the city building official.

R319.1.3 Diagram Required For Six Or More Dwelling Units. Where a building or building complex contains six (6) or more separate dwelling units, a description diagram indicating the identification pattern and location of each dwelling unit shall be posted in a conspicuous manner at the primary entrance of such building or buildings. This requirement of this section shall be included in any building plans submitted for plan check.

R319.1.4 Prohibition against Placing Numbers On Streets, Sidewalks, Or Curbs Or Displaying Improper Building Numbers. No person shall place, maintain, or cause any number, figure, letter, carving, drawing, design, or other marking upon, or paint, any street, sidewalk, or curb in the city, except as authorized by the city. No person shall place, maintain, or display any address identification number other than as designated by the city building official."

"Section R322.4 is added to the California Residential Code to read as follows:

R322.4 Additional Requirements.

R322.4.1 Purpose: The provisions of this division are intended to promote public safety and welfare by reducing the risk of flood damages in areas prone to flooding.

R322.4.2 Scope: Buildings and structures erected in areas prone to flooding shall be constructed as required by the provisions of this division. The base flood elevation shown on the approved flood hazard map is the minimum elevation used to define areas prone to flooding, unless records indicate a higher elevation is to be used. The flood-prone areas are defined in the jurisdiction's floodplain management ordinance.

R322.4.3 Definitions: For the purpose of this division, certain terms are defined as follows:

Base Flood Elevation is the depth or peak elevation of flooding, including wave height, having 1 percent chance of being equaled or exceeded in any given year. Base Flood Elevation is the elevation 22.5 inches above adjacent grade in area 1 and 16 inches above adjacent grade in area 2 as determined by the 100 year storm map on file in the department of building and safety.

Flood Hazard Map is a map published by an approved agency that defines the flood boundaries, elevations and insurance risk zones as determined by a detailed flood insurance study.

Hazard Zones are areas that have been determined to be prone to flooding and are classified as either flood hazard zones, A zones, or coastal high-hazard zones, V zones, in accordance with section 1612. Hazard Zones are areas which have been determined by the city to be prone to flooding and are classified as flood hazard zones.

R322.4.4 Protection Of Mechanical And Electrical Systems. New or replacement electrical equipment and heating, ventilating, air conditioning and other service facilities shall be either placed above the base flood elevation or protected to prevent water from entering or accumulating within the system components during floods up to the base flood elevation. Installation of electrical wiring and outlets, switches, junction boxes and panels below the base flood elevation shall conform to the provisions of the electrical code for such items in wet locations.

R22.4.5Flood Hazard Zones - A Zones.

R322.4.5.1 General: Areas that have been determined as prone to flooding but not subject to wave heights of more than 3 feet (914 mm) are designated as flood hazard zones. Building or structures erected within a flood hazard zone shall have the lowest floor, including basement floors, located at or above the base flood elevation.

Exceptions:

1. Except for group R occupancies, any occupancy may have floors below the base flood elevation in accordance with this section.

2. Except for group R occupancies, floors of buildings or structures which are used only for building access, exits, foyers, storage and parking garages may be below the base flood elevation.

R322.4.5.2 Enclosures Below Base Flood Elevation. Enclosed spaces below the base flood elevation shall not be used with the exception of building access, means of egress, foyers, storage and parking garages. Enclosed spaces shall be provided with vents, valves or other openings that will automatically equalize the lateral pressure of waters acting on the exterior wall surfaces. The bottom of the openings shall not be higher than 12 inches (305 mm) above finish grade. A minimum of two openings per building or one opening for each enclosure below the base flood elevation, whichever is greater, shall be provided. The total net area of such openings shall not be less than 4 square feet (0.37 m^2) or 1 square inch for every square foot (0.007 m^2 for every 1 m^2) of enclosed area, whichever is greater.

R322.4.5.3 Flood-Resistant Construction. Buildings or structures of any occupancy other than group R may, in lieu of meeting the elevation provisions, be erected with floors usable for human occupancy below the base flood elevation, provided the following conditions are met:

1. Space below the base flood elevation shall be constructed with exterior walls and floors that are impermeable to the passage of water.

2. Structural components subject to hydrostatic and hydrodynamic loads during the occurrence of flooding to the base flood elevation shall be capable of resisting such forces, including the effect of buoyancy.

3. Openings below the base flood elevation shall be provided with watertight closures and shall have adequate structural capacity to support flood loads acting upon closure surfaces.

4. Floor and wall penetrations for plumbing, mechanical and electrical systems shall be made watertight to prevent flood water seepage through spaces between penetration and wall construction materials. Sanitary sewer and storm drainage systems that have openings below the base flood elevation shall be provided with closure devices to prevent backwater flow during conditions of flooding.

R322.4.5.4 Plan Requirements For Flood-Resistant Construction. When buildings or structures are to be constructed in accordance with this section, an architect or engineer licensed by the state to practice as such shall prepare plans showing details of the floor wall and foundation support components. Calculations and approved technical data used to comply with the conditions of this section shall also be provided.

R322.4.5.5 Elevation Certification. A land surveyor, architect or engineer licensed by the state to practice as such shall certify that the actual elevation in relations to mean sea level of the lowest floor, if in a flood hazard zone, or the bottom of the lowest horizontal structural member if in a coastal high-hazard zone, are at or above the minimum elevation when required by the provisions of this section."

"Section R401.4.3 is added to the California Residential Code to read as follows:

R401.4.3 Grading. For the requirements for grading see Appendix J of the 2010 Edition of the California Building Code as amended by Section 9-1-202 of the Beverly Hills Municipal Code."

"Section R401.1 of the California Residential Code is amended to read as follows:

R401.1 Application. The provisions of this chapter shall control the design and construction of the foundation and foundation spaces for all buildings. In addition to the provisions of this chapter, the design and construction of foundations in areas prone to flooding as established by Table R301.2(1) shall meet the provisions of Section R322. Wood foundations shall be designed and installed in accordance with AF&PA PWF.

Exception: The provisions of this chapter shall be permitted to be used for wood foundations only in the following situations:

1. In buildings that have no more than two floors and a roof.

2. When interior basement and foundation walls are constructed at intervals not exceeding 50 feet (15 240 mm).

Wood foundations in Seismic Design Category D_0, D_1 or D_2 shall not be permitted.

Exception: In non-occupied, single-story, detached storage sheds and similar uses other than carport or garage, provided the gross floor area does not exceed 200 square feet, the plate height does not exceed 12 feet in height above the grade plane at any point, and the maximum roof projection does not exceed 24 inches."

"Sections R403.1.2, R403.1.3, R403.1.5 of the California Residential Code are amended to read as follows:

R403.1.2 Continuous footing in Seismic Design Categories D_0, D_1 and D_2. The braced wall panels at exterior walls of buildings located in Seismic Design Categories D_0, D_1 and D_2 shall be supported by continuous footings. All required interior braced wall panels in buildings shall be supported by continuous footings.

R403.1.3 Seismic reinforcing. Concrete footings located in Seismic Design Categories D_0, D_1 and D_2, as established in Table R301.2(1), shall have minimum reinforcement. Bottom reinforcement shall be located a minimum of 3 inches (76 mm) clear from the bottom of the footing.

In Seismic Design Categories D_0, D_1 and D_2 where construction joint is created between a concrete footing and a stem wall, a minimum of one No. 4 bar shall be installed at not more than 4 feet (1219 mm) on center. The vertical bar shall extend to 3 inches (76 mm) clear of the bottom of the footing, have a standard hook and extend a minimum of 14 inches (357 mm) into the stem wall.

In Seismic Design Categories D_0, D_1 and D_2 where a grouted masonry stem wall is supported on a concrete footing and stem wall, a minimum of one No. 4 bar shall be installed at not more than 4 feet (1219 mm) on center. The vertical bar shall extend to 3 inches (76 mm) clear of the bottom of the footing and have a standard hook.

In Seismic Design Categories D_0, D_1 and D_2 masonry stem walls without solid grout and vertical reinforcing are not permitted.

Exception: In detached one- and two-family dwellings located in Seismic Design Category A, B or C which are three stories or less in height and constructed with stud bearing walls, plain concrete footings without longitudinal reinforcement supporting walls and isolated plain concrete footings supporting columns or pedestals are permitted.

R403.1.5 Slope. The top surface of footings shall be level. The bottom surface of footings shall be permitted to have a slope not exceeding one unit vertical in 10 units horizontal (10-percent slope). Footings shall be stepped where it is necessary to change the elevation of the top surface of the footing or where the surface of the ground slopes more than one unit vertical in 10 units horizontal (10-percent slope).

For structures located in Seismic Design Categories D_0, D_1, or $D_{2,}$, stepped footings shall be reinforced with four 1/2-inch diameter (12.7 mm) deformed reinforcing bars. Two bars shall be place at the top and bottom of the footings as shown in Figure R403.1.5.

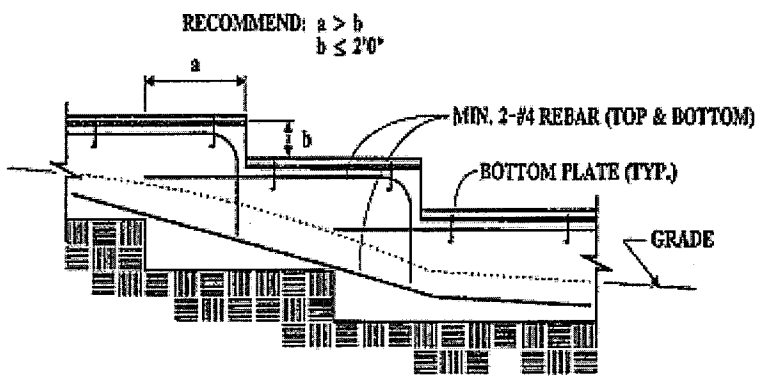

STEPPED FOUNDATIONS

FIGURE R403.1.5
STEPPED FOOTING"

"Section R404.2 of the California Residential Code is amended to read as follows:

R404.2 Wood foundation walls. Wood foundation walls shall be constructed in accordance with the provisions of Sections R404.2.1 through R404.2.6 and with the details shown in Figures R403.1(2) and R403.2(3). Wood foundation walls shall not be used for structures located in Seismic Design Category D_0, D_1, or D_2."

"Section R501.1 of the California Residential Code is amended to read as follows:

R501.1 Application. The provision of this chapter shall control the design and construction of the floors for all buildings including the floors of attic spaces used to house mechanical or plumbing fixtures and equipment weighing less than 400 lbs and maximum height of 4 feet above the floor or attic level."

"Section R503.2.4 is added to the California Residential Code to read as follows:

R503.2.4 Openings in horizontal diaphragms. Openings in horizontal diaphragms with a dimension perpendicular to the joist that is greater than 4 feet (1.2 m) shall be constructed in accordance with Figure R503.2.4.

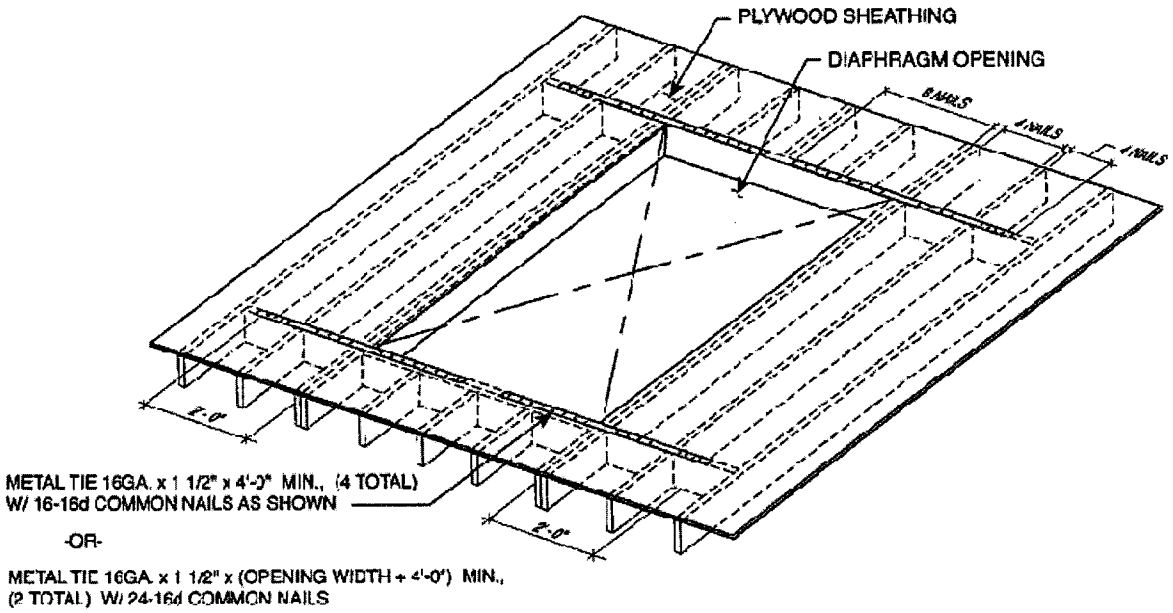

For SI: 1 inch = 25.4 mm, 1 foot = 304.8 mm.

a. Blockings shall be provided beyond headers.
b. Metal ties not less than 0.058 inch [1.47 mm (16 galvanized gage)] by 1.5 inches (38 mm) wide with eight 16d common nails on each side of the header-joist intersection. The metal ties shall have a minimum yield of 33,000 psi (227 MPa).
c. Openings in diaphragms shall be further limited in accordance with Section R301.2.2.2.5.

Figure R503.2.4"

"Lines 34 thru 37 of Table R602.3(1) of the California Residential Code are amended to read as follows:

		Other wall sheathing[h]		
34	$^{1}/_{2}$" structural cellulosic fiberboard sheathing	$^{1}/_{2}$" galvanized roofing nail~~, $^{7}/_{16}$" crown or 1" crown staple 16 ga., $1^{1}/_{4}$" long~~	3	6
35	$^{25}/_{32}$" structural cellulosic fiberboard sheathing	$1^{3}/_{4}$" galvanized roofing nail~~, $^{7}/_{16}$" crown or 1" crown staple 16 ga., $1^{1}/_{2}$" long~~	3	6
36	$^{1}/_{2}$" gypsum sheathing[d]	$1^{1}/_{2}$" galvanized roofing nail~~; staple galvanized, $1^{1}/_{2}$" long;~~ $1^{1}/_{4}$ screws, Type W or S	7	7
37	$^{5}/_{8}$" gypsum sheathing[d]	$1^{3}/_{4}$" glavanized roofing nail~~; staple galvanized, $1^{5}/_{8}$" long;~~ $1^{5}/_{8}$" screws, Type W or S	7	7

"Table R602.3(2) of the California Residential Code is amended to read as follows:

Wood structural panels subfloor, roof and wall sheathing to framing and particleboard wall sheathing to framing[f]			
up to $^1/_2$	~~Staple 15 ga. $1^3/_4$~~	~~4~~	~~8~~
	0.097 - 0.099 Nail $2^1/_4$	3	6
	~~Staple 16 ga. $1^3/_4$~~	~~3~~	~~6~~
$^{19}/_{32}$ and $^5/_8$	0.113 Nail 2	3	6
	~~Staple 15 and 16 ga. 2~~	~~4~~	~~8~~
	0.097 - 0.099 Nail $2^1/_4$	4	8
$^{23}/_{32}$ and $^3/_4$	~~Staple 14 ga. 2~~	~~4~~	~~8~~
	~~Staple 15 ga. $1^3/_4$~~	~~3~~	~~6~~
	0.097 - 0.099 Nail $2^1/_4$	4	8
	~~Staple 16 ga. 2~~	~~4~~	~~8~~
1	~~Staple 14 ga. $2^1/_4$~~	~~4~~	~~8~~
	0.113 Nail $2^1/_4$	3	6
	~~Staple 15 ga. $2^1/_4$~~	~~4~~	~~8~~

Floor underlayment; plywood-hardboard-particleboard[f]			
Plywood			
$^1/_4$ and $^5/_{16}$	$1^1/_4$ ring or screw shank nail-minimum $12^1/_2$ ga. (0.099") shank diameter	3	6
	~~Staple 18 ga., $^7/_8$, $^3/_{16}$ crown width~~	~~2~~	~~5~~
$^{11}/_{32}$, $^3/_8$, $^{15}/_{32}$, and $^1/_2$	$1^1/_4$ ring or screw shank nail-minimum $12^1/_2$ ga. (0.099") shank diameter	6	8[e]
$^{19}/_{32}$, $^5/_8$, $^{23}/_{32}$ and $^3/_4$	$1^1/_2$ ring or screw shank nail-minimum $12^1/_2$ ga. (0.099") shank diameter	6	8
	~~Staple 16 ga. $1^1/_2$~~	~~6~~	~~8~~

"Table R602.10.1.2(2) of the California Residential Code is amended to read as follows:

TABLE R602.10.1.2(2)[a, b, c]
BRACING REQUIREMENTS BASED ON SEISMIC DESIGN CATEGORY
(AS A FUNCTION OF BRACED WALL LINE LENGTH)

SOIL CLASS D[a] WALL HEIGHT = 10 FT 10 PSF FLOOR DEAD LOAD 15 PSF ROOF/CEILING DEAD LOAD BRACED WALL LINE SPACING ≤ 25 FT			MINIMUM TOTAL LENGTH (feet) OF BRACED WALL PANELS REQUIRED ALONG EACH BRACED WALL LINE			
Seismic Design Category (SDC)	Story Location	Braced Wall Line Length	Method LIB	Methods[d] DWB, SFB, GB, PBS, PCP, HPS	Method WSP	Continuous Sheathing
SDC D_0 or D_1		10	NP	~~3.0~~ 6.0	2.0	1.7
		20	NP	~~6.0~~ 12.0	4.0	3.4
		30	NP	~~9.0~~ 18.0	6.0	5.1
		40	NP	~~12.0~~ 24.0	8.0	6.8
		50	NP	~~15.0~~ 30.0	10.0	8.5
		10	NP	~~6.0~~ NP	4.5	3.8
		20	NP	~~12.0~~ NP	9.0	7.7
		30	NP	~~18.0~~ NP	13.5	11.5
		40	NP	~~24.0~~ NP	18.0	15.3
		50	NP	~~30.0~~ NP	22.5	19.1
		10	NP	~~8.5~~ NP	6.0	5.1
		20	NP	~~17.0~~ NP	12.0	10.2
		30	NP	~~25.5~~ NP	18.0	15.3
		40	NP	~~34.0~~ NP	24.0	20.4
		50	NP	~~42.5~~ NP	30.0	25.5
SDC D_2		10	NP	~~4.0~~ 8.0	2.5	
		20	NP	~~8.0~~ 16.0	5.0	
		30	NP	~~12.0~~ 24.0	7.5	
		40	NP	~~16.0~~ 32.0	10.0	
		50	NP	~~20.0~~ 40.0	12.5	
		10	NP	~~7.5~~ NP	5.5	
		20	NP	~~15.0~~ NP	11.0	
		30	NP	~~22.5~~ NP	16.5	
		40	NP	~~30.0~~ NP	22.0	
		50	NP	~~37.5~~ NP	27.5	
		10	NP	NP	NP	
		20	NP	NP	NP	
		30	NP	NP	NP	
		40	NP	NP	NP	
		50	NP	NP	NP	

d. Methods GB and PCP braced wall panel h/w ratio shall not exceed 1:1 in SDC D_0, D_1, and D_2. Methods DWB, SFB, PBS, and HPS are not permitted in SDC D_0, D_1, and D_2."

"Methods WSP, SFB, GB, PBS and PCP in Table R602.10.2 of the 2010 Edition of the California Residential Code are amended to read as follows:

TABLE R602.10.2
INTERMITTENT BRACING METHODS[a]

				8d common (2 ½" x 0.131) nails at 6" spacing (panel edge) at 12" spacing (intermediate supports), 3/8" edge distance to panel edge
WSP	Wood structural panel (see Section R604)	$\frac{3}{8}$" 15/32"	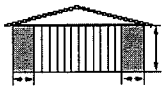	~~For exterior/interior sheathing see Table R602.3(3) For interior sheathing see Table R602.3(1)~~
SFB	Structural fiberboard sheathing	$\frac{1}{2}$" or $\frac{25}{32}$" for maximum 16" stud spacing		$1\frac{1}{2}$" galvanized roofing nails or 8d common ($2\frac{1}{2}$" x 0.131) nails at 3" spacing (panel edges) at 6" spacing (intermediate supports)
GB	Gypsum board	$\frac{1}{2}$"		Nails or screws at 7" spacing at panel edges including top and bottom plates; for all braced wall panel locations for exterior sheathing nail or screw size, see Table R602.3(1); for interior gypsum board nail or screw size, see Table R702.3.5
PBS	Particleboard sheathing (see Section R605)	$\frac{3}{8}$" or $\frac{1}{2}$" for maximum 16" stud spacing	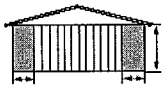	$1\frac{1}{2}$" galvanized roofing nails or 8d common ($2\frac{1}{2}$" x 0.131) nails at 3" spacing (panel edges) at 6 spacing (intermediate supports)
PCP	Portland cement plaster	See Section R703.6 For maximum 16" stud spacing	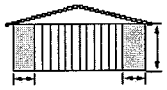	$1\frac{1}{2}$", 11 gage, $\frac{7}{16}$" head nails at 6" spacing ~~or $\frac{7}{8}$", 16 gage staples at 6" spacing~~

a. Methods GB and PCP braced wall panel h/w ratio shall not exceed 1:1 in SDC D_0, D_1, and D_2. Methods LIB, DWB, SFB, PBS, HPS, and PFG are not permitted in SDC D_0, D_1, and D_2."

"Figure R602.10.3.2 of the California Residential Code is amended to read as follows:

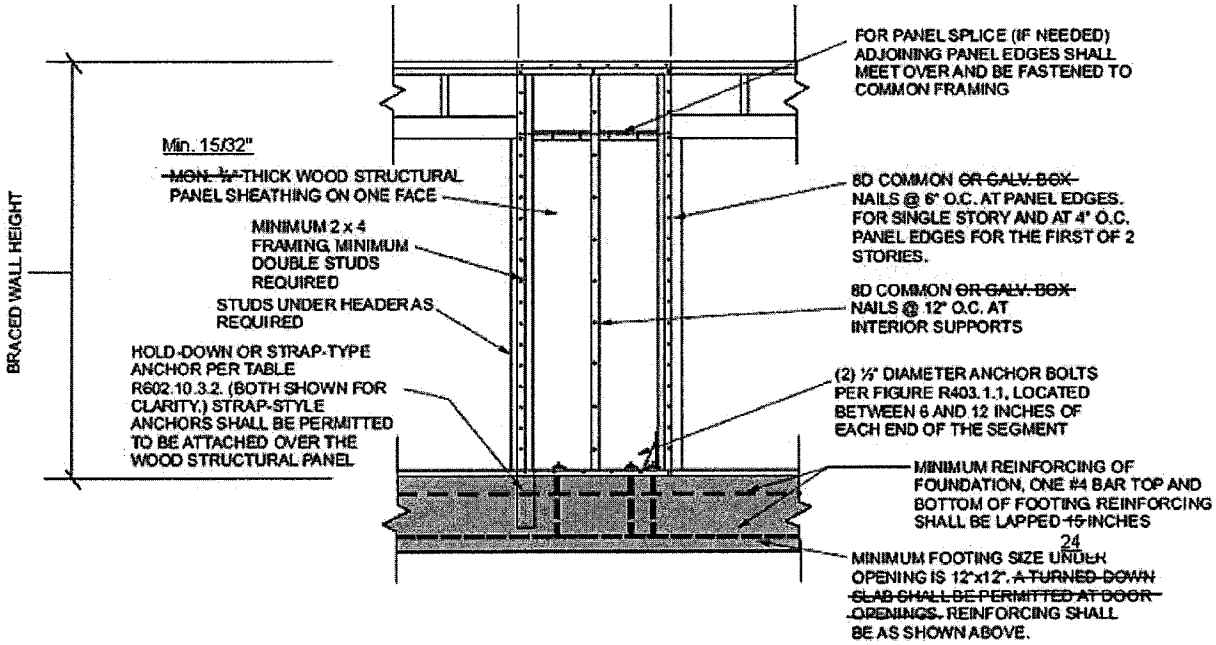

FIGURE R602.10.3.2
ALTERNATE BRACED WALL PANEL"

"Figure R602.10.3.3 of the California Residential Code is amended to read as follows:

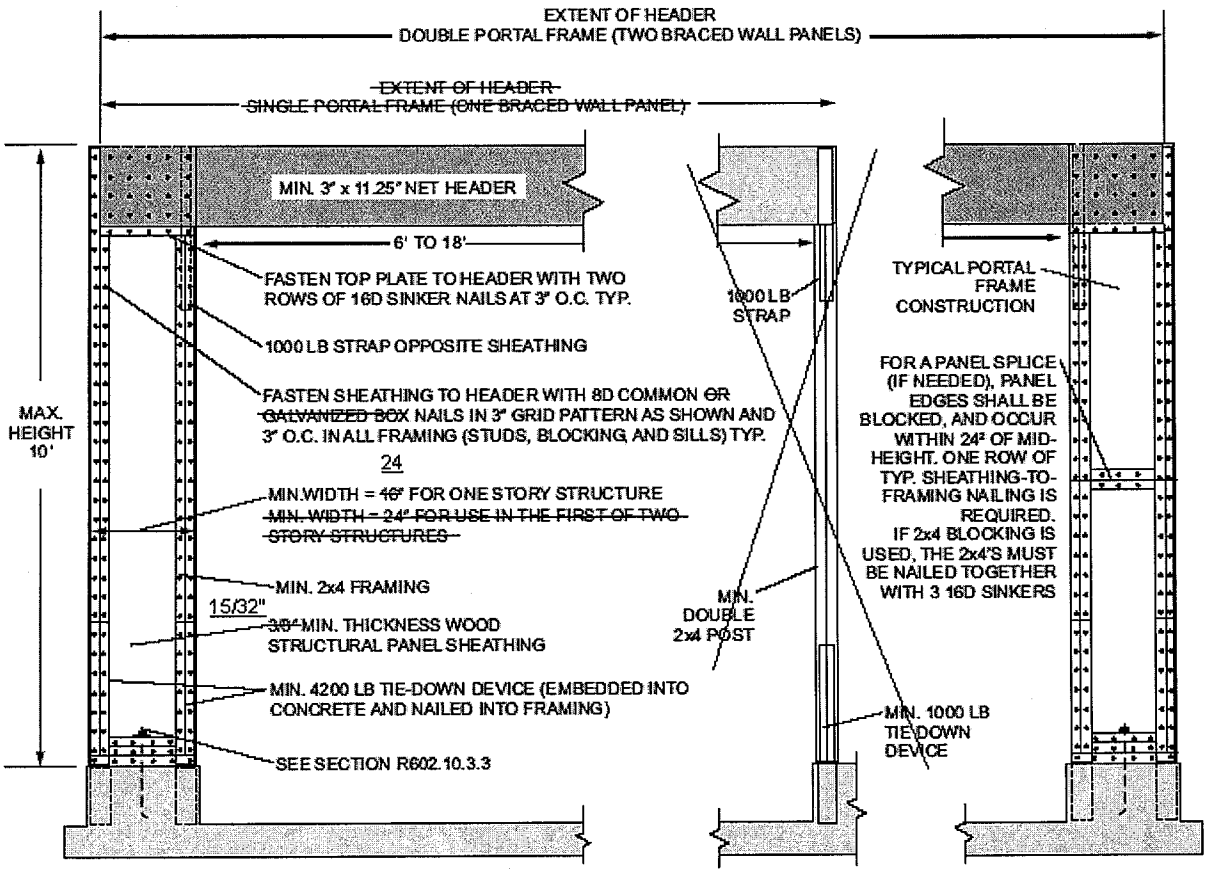

FIGURE R602.10.3.3
METHOD PFH: PORTAL FRAME WITH HOLD-DOWNS AT DETACHED GARAGE DOOR OPENINGS"

"Subsection 1 of Section R602.10.3.3 of the California Residential Code is amended to read as follows:

1. Each panel shall be fabricated in accordance with Figure R602.10.3.3. The wood structural panel sheathing shall extend up over the solid sawn or glued-laminated header and shall be nailed in accordance with Figure R602.10.3.3. A spacer, if used with a built-up header, shall be placed on the side of the built-up beam opposite the wood structural panel sheathing. The header shall extend between the inside faces of the first full-length outer studs of each panel. One anchor bolt not less than 5/8-inch-diameter (16 mm) and installed in accordance with Section R403.1.6 shall be provided in the center of each sill plate. The hold-down devices shall be an embedded-strap type, installed in accordance with the manufacturer's recommendations. The panels shall be supported directly on a foundation that is continuous across the entire length of the braced wall line. The foundation shall be reinforced as shown on Figure R602.10.3.2. This reinforcement shall be lapped not less than 24 inches (610 mm) with the reinforcement required in the continuous foundation located directly under the braced wall line."

"Table R602.10.4.1 of the California Residential Code is amended to read as follows:

TABLE R602.10.4.1
CONTINUOUS SHEATHING METHODS

METHOD	MATERIAL	MINIMUM THICKNESS	FIGURE	CONNECTION CRITERIA
CS-WSP	Wood structural panel	15/32" ~~3/8"~~	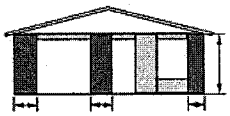	8d ~~6d~~ common (2" × 0.113") nails at 6" spacing (panel edges) and at 12" spacing (intermediate supports) ~~or 16 ga. × 1 3/4 staples at 3" spacing (panel edges) and 6" spacing (intermediate supports)~~
CS-G	Wood structural panel adjacent to garage openings and supporting roof load only[a,b]	15/32" ~~3/8"~~	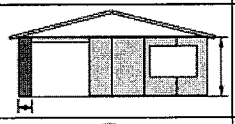	See Method CS-WSP
CS-PF	Continuous portal frame	See Section R602.10.4.1.1	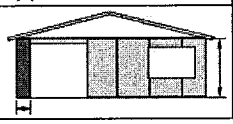	See Section R602.10.4.1.1

"Figure R602.10.4.1.1 of the California Residential Code is amended to read as follows:

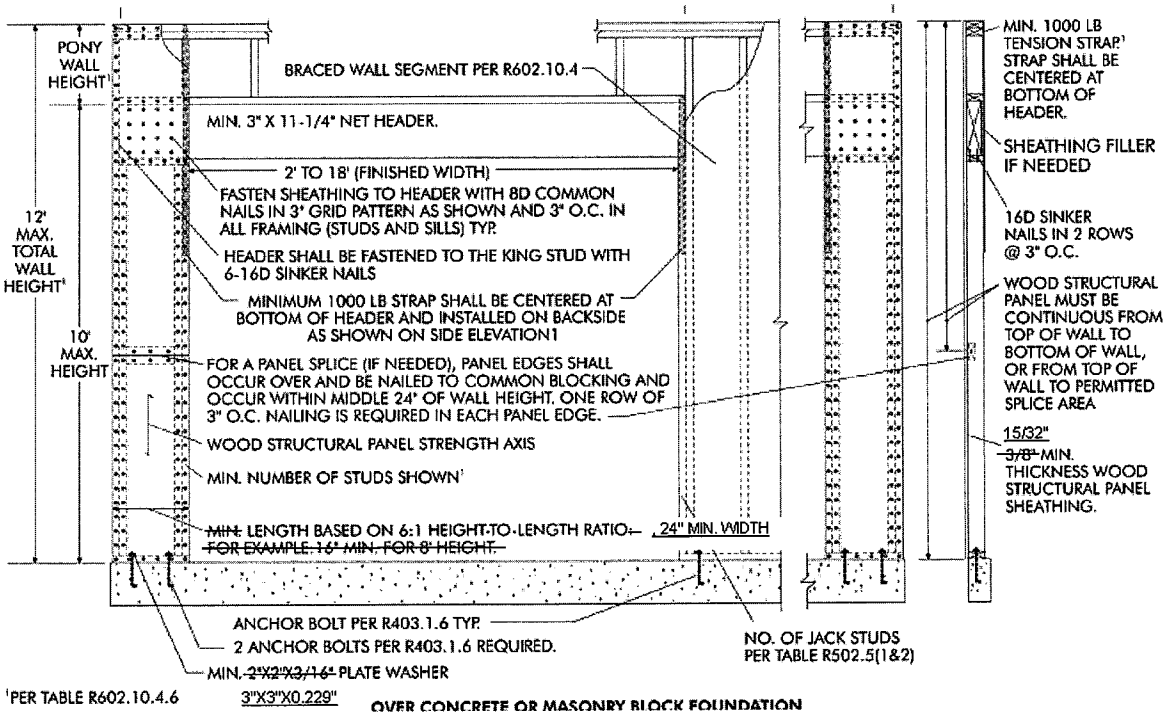

"Section R602.10.7.1 of the California Residential Code is hereby deleted."

"The second paragraph of Section R603.2.4 of the California Residential Code is amended to read as follows:

Where No. 8 screws are specified in a steel-to-steel connection, the required number of screws in the connection is permitted to be reduced in accordance with the reduction factors in Table R603.2.4, when larger screws are used or when the sheets of steel being connected is thicker than 33 mils (0.84mm). When applying the reduction factor, the resulting number of screws shall be rounded up."

"Section R606.2.4 of the California Residential Code is amended to read as follows:

R606.2.4 Parapet walls. Unreinforced solid masonry parapet walls shall not be less than 8 inches (203 mm) thick and their height shall not exceed four times their thickness. Unreinforced hollow unit masonry parapet walls shall be not less than 8 inches (203 mm) thick, and their height shall not exceed three times their thickness. Masonry parapet walls in areas subject to wind loads of 30 pounds per square foot (1.44 kPa) or located in Seismic Design Category D_0, D_1 or D_2, or on townhouses in Seismic Design Category C shall be reinforced in accordance with Section R606.12."

"Section R606.12.2.2.3 of the California Residential Code is amended to read as follows:

R606.12.2.2.3 Reinforcement of requirements for masonry elements. Masonry elements listed in Section R606.12.2.2.2 shall be reinforced in either the horizontal or vertical direction as shown in Figure R606.11(3) and in accordance with the following:

1. Horizontal reinforcement. Horizontal joint reinforcement shall consist of at least one No. 4 bar spaced not more than 48 inches (1219 mm). Horizontal reinforcement shall be provided within 16 inches (406 mm) of the top and bottom of these masonry elements.

2. Vertical reinforcement. Vertical reinforcement shall consist of at least one No. 4 bar spaced not more than 48 inches (1219 mm). Vertical reinforcement shall be within 8 inches (406mm) of the ends of masonry walls."

"The first sentence of the Exception set forth in Section R602.3.2 of the California Residential Code is amended to read as follows:

Exception: In other than Seismic Design Category D_0, D_1 or D_2, a single top plate may be installed in stud walls, provided the plate is adequately tied at joints, corners and intersecting walls by a minimum 3-inch-by-6-inch by a 0.036-inch-thick (76mm by 152mm by 0.914mm) galvanized-steel plate that is nailed to each wall or segment of a wall by six 8d nails on each side, provided the rafters or joists are centered over the studs with a tolerance of no more than 1 inch (25 mm)."

"Footnote "i" is added to Table R802.5.1(9) of the California Residential Code to read as follows:

i. Edge distances, end distances and nail spacing shall be sufficient to prevent splitting of the wood."

"Section R802.8 of the California Residential Code is amended to read as follows:

R802.8 Lateral support. Roof framing members and ceiling joists having a depth-to-thickness ratio exceeding 2 to 1 based on nominal dimensions shall be provided with lateral support at points of bearing to prevent rotation. For roof rafters with ceiling joists attached per Table R602.3(1), the depth-thickness ratio for the total assembly shall be determined using the combined thickness of the rafter plus the attached ceiling joist.

Exception: Roof trusses shall be braced in accordance with Section R802.10.3."

"Section R802.10.2 of the California Residential Code is amended to read as follows:

R802.10.2 Design. Wood trusses shall be designed in accordance with accepted engineering practice. The design and manufacture of metal-plate-connected wood trusses shall comply with ANSI/TPI 1. The truss design drawings shall be prepared by a registered professional."

"Section R803.2.4 is added to the California Residential Code to read as follows:

R803.2.4 Openings in horizontal diaphragms. Openings in horizontal diaphragms shall conform with Section R503.2.4."

"Section R902.1 of the California Residential Code is amended to read as follows:

Section R902.1 General. Except as otherwise provided in this section, roof coverings or roof assemblies on any structure regulated by this code shall be a fire-retardant roof covering or roof assembly that is listed as a class A assembly in accordance with ASTM E 108 or UL 790. In addition, no wood shall be used as a roof covering material. Noncombustible roof coverings may be applied in accordance with the manufacturer's requirements in lieu of a fire-retardant roofing assembly.

Exception:

(1) Roof repairs of less than 10 percent of the total roof area on existing structures in any one year period may be repaired with a roof covering that meets the same fire retardant standard as the existing roof."

"Section R902.1.1 of the California Residential Code is amended to read as follows:

R902.1.1 Roof Coverings within Very-High Fire Hazard Severity Zones. The entire roof covering of every existing structure where more than 50 percent of the total roof area is replaced within any one-year period, the entire roof covering of every new structure, and any roof covering applied in the alteration, repair or replacement of the roof of every existing structure, shall be a fire-retardant roof covering that is at least Class A non-wood."

"Section R902.1.2 of the California Residential Code is amended to read as follows:

R902.1.2 Roof Coverings within State Responsibility Areas. The entire roof covering of every existing structure where more than 50 percent of the total roof area is replaced within any one-year period, the entire roof covering of every new structure, and any roof covering applied in the alteration, repair or replacement of the roof of every existing structure, shall be a fire-retardant roof covering that is at least Class A non-wood."

"Section R902.1.3 of the California Residential Code is amended to read as follows:

R902.1.3 Roof Coverings in all other areas. The entire roof covering of every existing structure where more than 50 percent of the total roof area is replaced within any one-year period, the entire roof covering of every new structure, and any roof covering applied in the alteration, repair or replacement of the roof of every existing structure, shall be a fire-retardant roof covering that is at least Class A non-wood."

"Section R902.1.5 is added to the California Residential Code to read as follows:

R902.1.5 Class A Roof Covering Requirement. Notwithstanding any other requirement of the Beverly Hills municipal code, no later than July 1, 2013, all roof coverings in the city of Beverly Hills shall be fire retardant class A."

"Section R1001.3.1 of the California Residential Code is amended to read as follows:

R1001.3.1 Vertical reinforcing. For chimneys up to 40 inches (1016 mm) wide, four No. 4 continuous vertical bars adequately anchored into the concrete foundation shall be placed between wythes of solid masonry or within the cells of hollow unit masonry and grouted in accordance with Section R609. Grout

shall be prevented from bonding with the flue liner so that the flue liner is free to move with thermal expansion. For chimneys more than 40 inches (1016 mm) wide, two additional No. 4 vertical bars adequately anchored into the concrete foundation shall be provided for each additional flue incorporated into the chimney or for each additional 40 inches (1016 mm) in width or fraction thereof."

"Chapter 11 is added to the California Residential Code to read as follows:

Chapter 11 ROOF TOP EQUIPMENT.

R1101.1 Equipment Enclosures. Operating equipment, including associated ducting, located on the roof of a building shall be enclosed so as to be shielded from view in a horizontal plane or lower and so as to comply with the noise abatement provisions of Chapter 1 of Title 5 of the Beverly Hills Municipal Code. The enclosure finish shall match that of the building exterior walls."

"Chapter 12 is added to the California Residential Code to read as follows:

CHAPTER 12. TENTS, AWNINGS, CANOPIES, AND UNBRELLAS

R1201 Tents, Awnings, Canopies, And Umbrellas - Requirements.

R1201.1 Permits Required. No tent, awning, or canopy in excess of forty (40) square feet shall be erected or maintained on private property within the city without first obtaining a permit from the city building official. The permit fee shall be as established by resolution of the city council. Unless otherwise authorized by the city building official, no tent, awning, or canopy in excess of forty (40) square feet shall be erected or maintained on private property within the city in excess of ten (10) days.

R1201.2 Temporary Use. Tents, awnings, or canopies of cloth or pliable material shall be erected only as temporary shelters from the rain or sun and shall not be used as permanent structures or additions to the main building. Except as authorized by the city council or as otherwise specified in the municipal code, such structures shall not be used for the purpose of sheltering goods, wares, or merchandise or for the purpose of engaging in business in any manner thereunder. Such structures shall be permitted only if so constructed and situated, so that in the opinion of the city building official, the structure will not cause a fire hazard or in any other way be dangerous to life, limb, or property.

Exception: The provisions of this section shall not prohibit the covering of materials stored in a yard with fire-retardant tarpaulins.

R1201.3 Restrictions And Requirements. Any tent, awning, or other pliable material for which a permit is required under this section shall comply with the following:

(1) All city code provisions and regulations shall be complied with;

(2) An electrical permit shall be obtained by a duly licensed electrical contractor for any wiring or lighting to be installed;

(3) All plastics used shall display approval by the office of the fire marshal of the state;

(4) All cloth used shall be incombustible or flame-retardant. Flame-retardant materials shall display the name of the treating agency, the date of the flame-retardant application, the type of flame-retardant used, and the flame-retardant certificate;

(5) A testing flap shall be provided for the use of the fire department inspector;

(6) Two (2) means of egress shall be provided for tents or canopies having an area of 1,000 square feet or more. Such means of egress shall be not less than five (5') feet in width and located not

less than one-fifth ($^1/_5$) of the perimeter of the structure apart. Each means of egress shall be provided with exit signs as required by this code."

"Chapter 13 is added to the California Residential Code as follows:

CHAPTER 13. PERMANENT OCCUPANCY OF PUBLIC PROPERTY

R1301 General.

R1301.1 No part of any structure, or any appendage thereto, shall project beyond the property line of the building site, except as specified in this chapter and elsewhere in the Beverly Hills Municipal Code.

R1301.2 Structures or appendages regulated by this code shall be constructed of materials as permitted by this code.

R1301.3 The projection of any structure or appendage shall be the distance measured horizontally from the property line to the outermost point of the projection.

R1301.4. No provision of this chapter shall be construed to permit the violation of other laws and ordinances regulating the use and occupancy of public property.

R1302 Below Grade

R1302.1 Below Grade. Portions of buildings or structures below grade shall not project beyond the property line of the building site except as otherwise provided in the Beverly Hills municipal code.

R1303 Above Grade.

R1303.1 Streets And Alleys In Residential Zones. Projections beyond property lines adjacent to streets and alleys in residential zones shall not be permitted."

"Chapter 14 is added to the California Residential Code to read as follows:

CHAPTER 14. PEDESTRIANS

R1401 Protection of Pedestrians.

R1401.1 Railings shall be painted, and maintained painted, in a neutral color.

R1401.2 Barriers and fences shall be painted, and maintained painted in a neutral color.

R1401.3 The space under the canopy over the walkway and the approaches thereto shall be kept well lighted with artificial lighting continuously between sunset and sunrise. An automatic lighting system shall be used."

"Chapter 15 is added to the California Residential Code to read as follows:

CHAPTER 15. HILLSIDE BUILDING DISTRICT

R1501 Hillside Building District Established. There is hereby established a hillside building district in the area designated in the 'hillside building district map' as set forth in this code. The specific regulations in this chapter shall apply to the hillside building district.

R1502 Geological and Foundation Investigations Required.

R1502.1 Investigations Required. Prior to issuing a building permit for any new building, structure, or

addition to an existing building or structure on a site in the hillside building district where slopes exceed three (3) horizontal to one vertical or where unstable geological or soil conditions are known or suspected to exist, a geological and foundation investigation shall be conducted, and a report shall be submitted to the city building official by a geologist and a civil engineer registered in the state; provided, however, the city building official may issue a building permit for an addition to an existing building or structure without a geological and foundation inspection if such addition is located so as not to be affected by slopes exceeding three (3) horizontal to one vertical.

R1502.2 Prerequisites To Permit Issuance. Where a geological and foundation investigation required by this section indicates the presence of a geological hazard, and evidence indicates mitigating measures can offset or eliminate the hazard, the city building official shall issue a building permit provided all recommended mitigating measures are designed and incorporated into the proposed project and all other requirements of this code and the municipal code are met.

R1502.3 Denial of Permits. Where a geological and foundation investigation indicates the presence of a geological hazard, and evidence indicates no mitigating measures can offset or eliminate the hazard, the city building official shall deny the issuance of a building permit for the proposed project.

R1503 Foundation Embedment. Where foundations are placed on natural slopes or un-compacted fill, the foundation shall extend through the natural overburdened or un-compacted fill and rest in undisturbed, un-weathered, firm natural base materials. Foundations shall be designed to resist any vertical or lateral movement or overburden or fill.

R1504 Yard Drainage. Surface runoff flowing or collecting on building pads and yards shall be directed to catch basins and non-erosive devices to reduce the hazard of erosion, subsidence, or slippage of the surrounding property. Such devices shall conduct any surface runoff to a street or alley and shall be designed to accommodate a three (3") inch per hour rainfall.

R1505 Gutters. Eave gutters and downspouts on structures located in the hillside building district shall be provided to collect all roof water and deposit it in non-erosive devices to a street or alley. Gutters, downspouts, and non-erosive devices shall be sized to accommodate a three (3") inch per hour rainfall."

"Chapter 16 is added to the California Residential Code to read as follows:

CHAPTER 16. ADDITIONAL REQUIREMENTS IN CERTAIN AREAS

R1601 Special Regulations In Very High Fire Hazard Severity Zone. The following special regulations shall be applicable to all building and structures used for human occupancy in the very high fire hazard severity zone as defined in the city's fire code.

R1601.1 Exterior walls and eaves shall be of one-hour fire-resistive construction.

Exception: Exterior walls products listed in the Cal-Fire Wildland Urban Interface (WUI) Products — Building Materials Listing Program. Listed products must comply with State Fire Marshal Standard 12-7A-1.

R1601.2 Buildings or structures constructed over slopes shall have all under-floor and deck areas enclosed, and such enclosures shall be of one-hour fire resistive construction."

Section 6. Section 9-1-301 of Article 3 of Chapter 1 of Title 9 of the Beverly Hills Municipal Code is hereby repealed, provided, however, that such repeal shall not affect or excuse any violation of said Section 9-1-301 occurring prior to the effective date of this ordinance. New Section 9-1-301 is hereby added to Article 3 of Chapter 1 of Title 9 of the Beverly Hills Municipal Code to read as follows:

"**9-1-301: ADOPTION OF CALIFORNIA ELECTRICAL CODE:** The 2010 edition of the California Electrical Code, including all annexes but annex H, is hereby adopted by reference, and the same shall be known and may be cited as the Electrical Code of the City of Beverly Hills."

Section 7. Section 9-1-401 of Article 4 of Chapter 1 of Title 9 of the Beverly Hills Municipal Code is hereby repealed, provided, however, that such repeal shall not affect or excuse any violation of said Section 9-1-401 occurring prior to the effective date of this ordinance. New Section 9-1-401 is hereby added to Article 4 of Chapter 1 of Title 9 of the Beverly Hills Municipal Code to read as follows:

"**9-1-401: ADOPTION OF CALIFORNIA MECHANICAL CODE:** The 2010 edition of the California Mechanical Code, including the Appendices, is hereby adopted by reference, and the same shall be known and may be cited as the Mechanical Code of the City of Beverly Hills."

Section 8. Section 9-1-501 of Article 5 of Chapter 1 of Title 9 of the Beverly Hills Municipal Code is hereby repealed, provided, however, that such repeal shall not affect or excuse any violation of said Section 9-1-501 occurring prior to the effective date of this ordinance. New Sections 9-1-501 and 9-1-502 are hereby added to Article 5 of Chapter 1 of Title 9 of the Beverly Hills Municipal Code to read as follows:

"**9-1-501: ADOPTION OF CALIFORNIA PLUMBING CODE:** The 2010 edition of the California Plumbing Code, including the Appendices thereto, is hereby adopted by reference, subject to the provisions of Section 9-1-502, and the same shall be known and may be cited as the Plumbing Code of the City of Beverly Hills."

"9-1-502: AMENDMENTS TO CALIFORNIA PLUMBING CODE:

The California Plumbing Code is hereby amended as follows:

"Section D1.0 Roof Drainage Table D-1 Maximum Rates of Rainfall for Various Cities as set forth in the California Plumbing Code is amended to read as follows:

D 1.0 Roof Drainage.
The rainfall rates in Table D-1 shall be used for design unless higher values are established locally.

TABLE D-1 Continued **Maximum Rates of Rainfall for Various Cities**		
States and Cities	**Storm Drainage** **60-Minute Duration, 100-Year Return**	
	Inches / Hour	**GPM/Square Foot**
CALIFORNIA		
Beverly Hills	3.0	0.031
Eureka	1.5	0.016
Lake Tahoe	1.3	0.014
Los Angeles	2.0	0.021
Lucerne Valley	2.5	0.026
Needles	1.5	0.016
Palmdale	3.0	0.031
Redding	1.5	0.016
San Diego	1.5	0.016
San Francisco	1.5	0.016
San Luis Obispo	1.5	0.016

Section 9. Sections 9-1-601 and 9-1-602 of Article 6 of Chapter 1 of Title 9 of the Beverly Hills Municipal Code are hereby repealed, provided, however, that such repeal shall not affect or excuse any violation of said Sections occurring prior to the effective date of this ordinance. New Sections 9-1-601 and 9-1-602 are hereby added to Article 6 of Chapter 1 of Title 9 of the Beverly Hills Municipal Code to read as follows:

"9-1-601: ADOPTION OF UNIFORM SWIMMING POOL, SPA AND HOT TUB CODE: The Uniform Swimming Pool, Spa and Hot Tub Code, 2009 Edition, except for Part 1 thereof, published by the International Association of Plumbing and Mechanical Officials, is hereby adopted by reference, subject to the provisions of Section 9-1-602, and the same may be cited as the Swimming Pool, Spa and Hot Tub Code of the City of Beverly Hills."

"9-1-602: AMENDMENTS TO UNIFORM SWIMMING POOL, SPA AND HOT TUB CODE:

"Section 101.4.1 of the Uniform Swimming Pool, Spa & Hot Tub Code is amended to read as follows:

101.4.1. The provisions of this code shall apply to the erection, installation, alteration, repair, relocations, replacement, addition to, use, and maintenance of swimming pools, spas, or hot tub systems within one and two single family residential properties."

"Section 301.5 is added to the Uniform Swimming Pool, Spa & Hot Tub Code to read as follows:

301.5 Swimming Pool Safety Act. Whenever a building permit is issued for construction of a new swimming pool, toddler pool, or spa, or any building permit is issued for remodeling of an existing swimming pool, toddler pool, or spa, at a private, single family home, it shall be equipped with a drowning prevention safety feature and all requirements of the Swimming Pool Safety Act as identified by the California Health and Safety Code Section 115920-115929."

Section 10. A new Article 11 "California Green Building Standards Code" is hereby added to Chapter 1 of Title 9 of the Beverly Hills Municipal Code to read as follows:

"Article 11. California Green Building Standards Code

9-1-1101: ADOPTION OF CALIFORNIA GREEN BUILDING STANDARDS CODE: The 2010 Edition of the California Green Building Standards Code, including all appendices, is hereby adopted by reference, subject to the amendments set forth in Section 9-1-1102 of this Article, and the same shall be known and cited as the Green Building Standards Code of the City of Beverly Hills.

9-1-1102: AMENDMENTS TO CALIFORNIA GREEN BUILDING STANDARDS CODE:

The California Green Building Standards Code adopted pursuant to Section 9-1-1101 is hereby amended as follows:

"Appendix Chapters A4 and A5 are adopted as mandatory guidelines to the 2010 Edition of the California Green Building Standards Code.

> **Exception**: All code appendix A4 and A5 sections that have been adopted as mandatory requirements shall be the minimum mandatory code requirements. Tier 1 and Tier 2 requirements shall be mandatory as established in sections A4.601.1 and A5.601.1."

"Section 101.10 of the California Green Building Standards Code is amended to read as follows:

101.10 Mandatory and voluntary requirements. This code contains both mandatory and voluntary green building measures. Mandatory and voluntary measures are identified in the appropriate application

checklist contained in this code. The mandatory measures of Chapter 4 and Chapter A4, including voluntary measures of Appendix A4 shall apply to all low-rise residential buildings. The mandatory measures of Chapter 5 and Chapter A5, including the voluntary measures of Appendix A5 shall apply to all buildings which are not low-rise residential buildings."

"Section 102.2.1 is added to the California Green Building Standards Code to read as follows:

102.2.1 Construction documentation on plans. When construction drawing plans are required by the enforcing agency the corresponding application checklist(s) shall be incorporated into the construction drawing plans by the design professional before approval can be obtained from the building official."

"Subsection 1 of Section 103.1 of the California Green Code is amended to read as follows:

1. **Application** – New construction, unless otherwise indicated in this code, of State buildings (all occupancies), including buildings constructed by the Trustees of the California State University and the Regents of the University of California and all occupancies where no state agency has the authority to adopt building standards applicable to such buildings, including, non-residential occupancies, residential building greater than six (6) stories in height.

   Enforcing agency – State or local agency specified by the applicable provisions of law.

   Authority cited – *Health and Safety Code* Sections 18930.5, 18934.5 and 18938(b).

   Reference – *Health and Safety Code,* Division 13, Part 2.5 commencing with Section 18901."

"Section 202 of the California Green Building Standards Code is amended by adding a new definition to read as follows:

LANDSCAPE AREA. The entire lot, including, water features such as pools, spas, ponds, and fountains. 'Landscaped area' shall not include the building footprint, driveways, non-irrigated portions of parking lots, hardscapes such as decks and patios, and other nonporous areas."

"Section 202 of the California Green Building Standards Code is amended by amending the following definition to read as follows:

LOW-RISE RESIDENTIAL BUILDING. A building that is of Occupancy Group R and is six stories or less, or that is a one- or two-family dwelling or townhouse."

"Section 202 of the California Green Building Standards Code is amended by adding a new definition to read as follows:

SUSTAINABILITY. Consideration of present development and construction impacts on the community, the economy, and the environment without compromising the needs of the future."

"Section 303.1.1 of the California Green Building Standards Code is amended to read as follows:

303.1.1 Tenant Improvement. The provisions of this code shall apply only to the initial tenant or occupant improvements to a project. Any provisions of this code applicable to the initial tenant or occupant improvements to a project shall be maintained in future tenant or occupant improvements."

"Section 4.101.2 is added to the California Green Building Standards Code to read as follows:

4.101.2 Scope. The buildings and occupancies applicable to this Chapter are those under the authority of the Department of Housing and Community Development as stated in Section 104, and, residential buildings greater than six (6) stories in height."

"Section A4.104.1 of the California Green Building Standards Code is amended to read as follows:

A4.104.1 Supervision and education. Individuals with oversight authority on the project can demonstrate knowledge in areas related to environmentally friendly development can by obtaining a recognized certification, and has provided all parties involved with the development process a written guideline and instruction on the construction documents specifying the green goals of the project.

Note: Lack of adequate supervision and dissemination of the project goals can result in negative effects on green building projects. If the theme of green building is not carried throughout the project, the overall benefit can be substantially reduced by the lack of knowledge and information provided to the various entities involved with the construction of the project."

"Section A4.105.2 of the California Green Building Standards Code is amended to read as follows:

A4.105.2 Reuse of Materials. The proposed structure utilizes reused items for at least 15% for Tier I and 25% for Tier II in one of the following categories, or a combination of multiple categories totaling that required percentage:
1. Light fixtures
2. Plumbing fixtures
3. Doors and trim
4. Masonry
5. Electrical devices
6. Appliances
7. Foundations or portions of foundations

Note: Reused material must be in compliance with the appropriate Title 24 requirements."

"Section A4.106.2.3 Tier 1 requirement of the California Green Building Standards Code is adopted as a mandatory requirement."

"Section A4.106.3 of the California Green Building Standards Code is amended to read as follows:

A4.106.3 Landscape Design. Landscaping completed prior to the final inspection accomplishes one or more of the following:

1. Areas disrupted during construction are restored to be consistent with native vegetation species and patterns.
2. Limit turf areas to the greatest extent possible.
3. Tier 1 not more than 50% of the total landscaped area.
4. Tier 2 not more than 25 % of the total landscaped area.
5. Utilize at least 75% native Californian or drought tolerant plant and tree species appropriate for the climate zone region.
6. Hydrozoning irrigation techniques are incorporated into the landscape design."

"Section 4.106.4 is added to the California Green Building Standards Code to read as follows:

4.106.4 Electric vehicle charging. Provide facilities meeting Section 406.7 (Electric Vehicle) of the California Building Code and as follows:

4.106.4.1 Electric vehicle supply wiring. One 120 VAC 20 amp and one 208/240V 40 amp, grounded AC outlets or panel capacity for one 120 VAC 20 amp and one 208/240V 40 amp, grounded AC outlet and conduit installed for future outlets for each dwelling unit. Electric vehicle

supply shall be provided and may be installed in a stall provided to comply with the code minimum parking requirements. Dwelling unit shall be defined by the California Building Code.

Exception: Apartment Buildings and Apartment Units."

"Section A4.203.1 of the California Green Building Standards Code is adopted as a mandatory requirement."

"Section A4.211.1 Tier 1 of the California Green Building Standards code is adopted as a mandatory requirement and amended to read as follows:

A4.211.1 Install a solar photovoltaic (PV) system in compliance with the California Energy Commission New Solar Homes Partnership (NSHP).[1,2] Install energy efficiency measures meeting either Tier I or Tier II below.

Tier 1. Exceed the California Energy Code requirements, based on the 2008 Energy Efficiency Standards requirements by 15%.

Tier 2. Exceed the California Energy Code requirements, based on the 2008 Energy Efficiency Standards requirements by 30%.

Solar water heating may be used to assist in meeting the energy efficiency requirements of either Tier I or Tier II.

1. In addition, for either Tier I or II, each appliance provided by the builder must be Energy Star if an Energy Star designation is applicable for that appliance.
2. Information on NSHP incentives available through the California Energy Commission may be obtained at the "Go Solar California" website: www.GoSolarCalifornia.ca.gov/nshp/index.html.

Notwithstanding, a single family residential property is exempt from the requirements of installing a solar photovoltaic (PV) system if the property meets the requirements of section A4.211.3 and A4.211.4. This exception, however, does not apply if the property owner of a single family residential property chooses to volunarily comply with CALGreen Tier 1 or Tier 2 requirements."

"Section 4.304.1 of the California Green Building Standards Code is amended to read as follows:

4.304.1 Irrigation controllers. Automatic irrigation system controllers for landscaping shall be provided and installed at the time of final inspection and shall comply with the following:

1. Controllers shall be weather- or soil moisture-based controllers that automatically adjust irrigation in response to changes in plants' needs as weather conditions change.
2. Weather-based controllers without integral rain sensors or communication systems that account for local rainfall shall have a separate wired or wireless rain sensor which connects or communicates with the controller(s). Soil moisture-based controllers are not required to have rain sensor input.

Note: More information regarding irrigation controller function and specifications is available from the Irrigation Association at http://www.irrigation.org/SWAT/Industry/ia-tested.asp"

"Section A4.305.1 of the California Green Building Standards Code is adopted as a mandatory requirement."

"Section A4.403.1 of the California Green Building Standards Code is amended to read as follows:

A4.403.1 Frost protected foundation systems. As allowed by local conditions, utilize Frost-Protected Shallow Foundation (FPSF) in compliance with the California Residential Code. When an FPSF foundation system is installed the manual required by Section 4.410.1 shall include instructions to the

owner or occupant regarding the necessity for heating the structure as required in Section R403.3 of the California Residential Code."

"Section A4.407.4 of the California Green Building Standards Code is adopted as mandatory."

"Section A4.407.5 of the California Green Building Standards Code is deleted."

"Section A4.504.2 Tier 2 requirement of the California Green Building Standards Code is adopted as a mandatory requirement."

"Section A4.504.3 Tier 1 requirement of the California Green Building Standards Code is adopted as a mandatory requirement."

"Section A4.506.1 of the California Green Building Standards Code is adopted as a mandatory requirement."

"Section A4.601.1 of the California Green Building Standards Code is amended to read as follows:"

A4.601.1 Scope. The measures contained in this appendix are not mandatory unless adopted by a city, county, or city and county as specified in Section 101.7. The provisions of this section outline means of achieving enhanced construction or reach levels by incorporating additional green building measures. In order to meet one of the tier levels designers, builders or property owners are required to incorporate additional green building measures necessary to meet the threshold of each level.

A4.601.1.1 Mandatory Tier 1. Multi-Family Residential buildings greater than, or equal to, 25,000 square feet shall comply with Tier 1 measures (refer to A4.601.4).

A4.601.1.2 Mandatory Tier 2. Multi-Family Residential buildings greater than or equal to 50,000 square feet subject to a Development Agreement or General Plan Amendment, shall comply with Tier 2 measures (refer to A4.601.5).

"Section A5.105.1.3 of the California Green Building Standards Code is amended to read as follows:

A5.105.1.3 Salvage. The proposed structure utilizes reused items for at least 15% for Tier I and 25% for Tier II in one of the following categories, or a combination of multiple categories totaling that required percentage:

1. Light fixtures
2. Plumbing fixtures
3. Doors and trim
4. Masonry
5. Electrical devices
6. Appliances
7. Foundations or portions of foundations

Note: Reused material must be in compliance with the appropriate Title 24 requirements."

"Section A5.106.5.3.1 Tier 1 elective requirement of the California Green Building Standards Code is adopted as a mandatory requirement."

"Section A5.106.6 of the California Green Building Standards Code is deleted."

"Section A5.203.1 Tier 1 requirement of the California Green Building Standards Code is adopted as a mandatory requirement."

"Section A5.211.1 of the California Green Building Standards Code is adopted as a mandatory requirement."

"Section A5.105.1.3 of the California Green Building Standards Code is amended to read as follows:

A5.303.3 Appliances.

1. Clothes washer shall have a maximum Water Factor (WF) that will reduce the use of water by 10% below the California Energy Commissions' WF standards for commercial clothes washers located in Title 20 of the California Code of Regulations.
2. Dishwashers shall meet the following water use standards:
    a. Residential—5.8 gallons per cycle
    b. Commercial—refer to Table A5.303.3
3. Ice makers shall be air cooled.
4. Food steamers shall be connection-less or boiler-less.
5. [BSC] The use and installation of water softeners that discharge to the community sewer system shall be limited or prohibited if certain conditions are met."

"Section A5.405.1 of the California Green Building Standards Code is adopted as a mandatory requirement."

"Section A5.405.2.2 of the California Green Building Standards Code is adopted as a mandatory requirement."

"Section A5.405.3 of the California Green Building Standards Code is adopted as a mandatory requirement."

"Section A5.405.4 Tier 1 requirement of the California Green Building Standards Code is adopted as a mandatory requirement."

"Section 5.507.4.2 of the California Green Building Standards Code is amended to read as follows:

5.507.4.2 Interior sound. Wall and floor-ceiling assemblies separating tenant spaces and tenant spaces and public places shall have an STC of at least 50."

"Section A5.601.1 of the California Green Building Standards Code is amended to read as follows:"

A5.601.1 Scope. The measures contained in this appendix are not mandatory unless adopted by local government as specified in Section 101.7. The provisions of this section outline means of achieving enhanced construction or reach levels by incorporating additional green building measures. In order to meet one of the tier levels designers, builders or property owners are required to incorporate additional green building measures necessary to meet the threshold of each level.

A5.601.1.1 Mandatory Tier 1. Buildings greater than, or equal to, 25,000 square feet shall comply with Tier 1 measures (refer to A5.601.2).

A5.601.1.2 Mandatory Tier 2. Buildings greater than or equal to 50,000 square feet subject to a Development Agreement or General Plan Amendment, shall comply with Tier 2 measures (refer to A5.601.3).

"Section A4.602 of Appendix A4 of the California Green Building Standards Code is amended to read as follows:

CITY OF BEVERLY HILLS
RESIDENTIAL OCCUPANCIES

LESS THAN 7 STORIES

APPLICATION CHECKLIST

FEATURE OR MEASURE	LEVELS APPLICANT TO SELECT ELECTIVE MEASURES			VERIFICATIONS ENFORCING AGENCY TO SPECIFY VERIFICATION METHOD		
	Mandatory	Prerequisites and electives[1]		Enforcing Agency	Installer or Designer	Third party
		Tier 1	Tier 2			
PLANNING AND DESIGN						
Site Selection						
A4.103.1 A site which complies with at least one of the following characteristics is selected:						
1. An infill site is selected.		☐	☐	☐	☐	☐
2. A greyfield site is selected.		☐	☐	☐	☐	☐
3. An EPA-recognized Brownfield site is selected.		☐	☐	☐	☐	☐
Site Preservation						
A4.104.1 An individual with oversight responsibility for the project can demonstrate knowledge in environmentally friendly design or development by obtaining a recognized certification and has provided a written guideline and instruction on the construction documents specifying the green goals of the project and disseminated it to all parties involved with the development process. [BH1]		☐	☐	☐	☐	☐
Deconstruction and Reuse of Existing Materials						
A4.105.2 The proposed structure utilizes reused items that meet current standards for at least 15% for Tier I and 25% for Tier II in one of the following categories, or a combination of multiple categories totaling that required percentage: [BH1] 1. Light fixtures 2. Plumbing fixtures 3. Doors and trim 4. Masonry 5. Electrical devices 6. Appliances 7. Foundations or portions of foundations		☐	☐	☐	☐	☐
Site Development						
4.106.2 A plan is developed and implemented to manage storm water drainage during construction.	☒					
4.106.3 The site shall be planned and developed to keep surface water away from buildings. Construction plans shall indicate how site grading or a drainage system will manage all surface water flows.	☒					
A4.106.1 Orient building to optimize the use of solar energy with the long side of the house oriented within 30° of south.		☐	☐	☐	☐	☐
A4.106.2.1 Soil analysis is performed by a licensed design professional and the findings utilized in the structural design of the building.		☐	☐	☐	☐	☐
A4.106.2.2 Soil disturbance and erosion are minimized by at least one of the following:						
1. Natural drainage patterns are evaluated and erosion controls are implemented to minimize erosion during construction and after occupancy.		☐	☐	☐	☐	☐
2. Site access is accomplished by minimizing the amount of cut and fill needed to install access roads and driveways.		☐	☐	☐	☐	☐
3. Underground construction activities are coordinated to utilize the same trench, minimize the amount of time the disturbed soil is exposed and the soil is replaced using accepted compaction methods.		☐	☐	☐	☐	☐
A4.106.2.3 Topsoil shall be protected or saved for reuse as specified in this section.	☒[BH2]	☒[BH2]	☒[BH2]	☐	☐	☐
Tier 1. Displaced topsoil shall be stockpiled for reuse in a designated area and covered or protected from erosion.		☒[2]	☒[2]			
Tier 2. The construction area shall be identified and delineated by fencing or flagging to limit construction activity to the construction area.			☒[2]			

FEATURE OR MEASURE	LEVELS APPLICANT TO SELECT ELECTIVE MEASURES			VERIFICATIONS ENFORCING AGENCY TO SPECIFY VERIFICATION METHOD		
	Mandatory	Prerequisites and electives[1]		Enforcing Agency	Installer or Designer	Third party
		Tier 1	Tier 2			
A4.106.3 Landscaping completed prior to the final inspection accomplishes one or more of the following: [BH1]						
1. Areas disrupted during construction are restored to be consistent with native vegetation species and patterns.		☐	☐	☐	☐	☐
2. Limit turf areas to the greatest extent possible.						
a. Not more than 50% of landscaped area for Tier 1.		☐		☐	☐	☐
b. Not more than 25% of landscaped area for Tier 2.			☐	☐	☐	☐
3. Utilize at least 75% native Californian or drought tolerant plant and tree species appropriate for the climate zone region.		☐	☐	☐	☐	☐
4. Hydrozoning irrigation techniques are incorporated into the landscape design.		☐	☐	☐	☐	☐
4.106.4 Electric vehicle charging. Provide facilities meeting Section 406.7 (Electric Vehicle) of the *California Building Code* and as follows: [BH1] **4.106.4.1 Electric vehicle supply wiring.** One 120 VAC 20 amp and one 208/240 V 40 amp, grounded AC outlets or panel capacity for one 120 VAC 20 amp and one 208/240 V 40 amp, grounded AC outlet and conduit installed for future outlets for each dwelling unit. Electric vehicle supply shall be provided and may be installed in a stall provided to comply with the code minimum parking requirements. Dwelling unit shall be defined by the California Building Code. **Exception:** Apartment Buildings and Apartment Units.	☒[BH2]	☒[BH2]	☒[BH2]			
A4.106.4 Permeable paving is utilized for the parking, walking, or patio surfaces in compliance with the following.						
Tier 1. Not less than 20% of the total parking, walking, or patio surfaces shall be permeable.		☒[2]		☐	☐	☐
Tier 2. Not less than 30% of the total parking, walking, or patio surfaces shall be permeable.			☒[2]	☐	☐	☐
A4.106.5 Roofing materials shall have a minimum 3-year aged solar reflectance and thermal emittance or a minimum Reflectance Index (SRI) equal to or greater than the values specified in Tables A4.106.5 (1) and A4.106.5 (2).						
Tier 1 roof covering shall meet or exceed the values contained in Table A4.106.5 (1).		☒[2]				
Tier 2 roof covering shall meet or exceed the values contained in Table A4.106.5 (2).			☒[2]			
Innovative Concepts and Local Environmental Conditions						
A4.107.1 Items in this section are necessary to address innovative concepts or local environmental conditions.						
Item 1.	☐	☐	☐	☐	☐	☐
Item 2.	☐	☐	☐	☐	☐	☐
Item 3.	☐	☐	☐	☐	☐	☐
ENERGY EFFICIENCY						
General						
4.201.1 Low-rise residential buildings shall meet or exceed the minimum standard design required by the California Energy Standards.	☒					
A4.203.1 Exceed the California Energy Code requirements, based on the 2008 Energy Efficiency Standards requirements by 15%.	☒[BH2]	☒[2]				
A4.203.1 Exceed the California Energy Code requirements, based on the 2008 Energy Efficiency Standards requirements by 30%.			☒[2]			
Prescriptive Approach						
Building Envelope						
A4.205.1 Radiant roof barrier is installed in Climate Zones 2, 4, and 8 through 15.		☐	☐	☐	☐	☐
A4.205.2 Exterior shading at least 18 inches in depth is		☐	☐	☐	☐	☐

FEATURE OR MEASURE	LEVELS APPLICANT TO SELECT ELECTIVE MEASURES			VERIFICATIONS ENFORCING AGENCY TO SPECIFY VERIFICATION METHOD		
	Mandatory	Prerequisites and electives[1]		Enforcing Agency	Installer or Designer	Third party
		Tier 1	Tier 2			
provided on south and west windows.						
Air Sealing Package						
A4.206.1 Third party blower door test is conducted and passed to verify building envelope tightness.		☐	☐	☐	☐	☒
HVAC Design, Equipment and Installation						
A4.207.1 Radiant, hydronic, ground source and other innovative space heating and cooling systems included in the proposed design shall be designed using generally accepted industry-approved guidelines and design criteria.		☐	☐	☐	☐	☐
A4.207.2 An HVAC system commissioning plan is developed and the following items, as appropriate, pertaining to the heating and cooling systems are inspected and certified by an independent third party agency: 1. Verify compliance with the manufacturers recommended start-up procedures. 2. Verify refrigerant charge by super-heat or other methods specified by the manufacturer. 3. Burner is set to fire at the nameplate input rating. 4. Temperature drop across the evaporator is within the manufacturers recommended range. 5. Test and verify air flow to be within 10% of the initial design air flow. 6. Static pressure within the duct system is within the manufacturers' acceptable range. 7. Verify that the whole house and exhaust ventilation systems meet Title 24 requirements. 8. Verify that the recommended maintenance procedures and schedules are documented and provided to the home owner.		☐	☐	☐	☐	☒
A4.207.2.3 Results of the commissioning inspection shall be included in the Operation and Maintenance Manual required in Section 4.410.1.		☐	☐	☐	☐	☐
A4.207.4 Install gas-fired (natural or propane) space heating equipment with an Annual Fuel Utilization Ratio (AFUE) of.90 or higher.		☐	☐	☐	☐	☐
A4.207.5 If an electric heat pump must be used, select equipment with a Heating Seasonal Performance Factor (HSPF) of 8.0 or higher.		☐	☐	☐	☐	☐
A4.207.6 When climatic conditions necessitate the installation of cooling equipment, select cooling equipment with a Seasonal Energy Efficiency Ratio (SEER) higher than 13.0 and an Energy Efficiency Ratio (EER) of at least 11.5.		☐	☐	☐	☐	☐
A4.207.7 Install ductwork to comply with at least one of the following: 1. Install ducts within the conditioned envelope of the building. 2. Install ducts in an underfloor crawl space. 3. Use ducts with an R-6 insulation value or higher. 4. Install ductwork which is buried in the ceiling insulation.		☐ ☐ ☐ ☐	☐ ☐ ☐ ☐	☐ ☐ ☐ ☐	☐ ☐ ☐ ☐	☐ ☐ ☐ ☐
A4.207.8 Perform duct leakage testing to verify a total leakage rate of less than 6% of the total fan flow.		☐	☐	☐	☐	☐
A4.207.9 In cooling Climate Zones 2, 4, and 8 through 15 install a whole-house fan with insulated louvers or an insulated cover.		☐	☐	☐	☐	☐
A4.207.10 ENERGY STAR ceiling fans are installed in all bedrooms and living areas.		☐	☐	☐	☐	☐
Water Heating Design, Equipment and Installation						
A4.208.1 The Energy Factor (EF) for a gas fired storage water heater is higher than .60.		☐	☐	☐	☐	☐
A4.208.2 The Energy Factor (EF) for a gas fired tankless water heater is .80 or higher.		☐	☐	☐	☐	☐
A4.208.3 Where the hot water source is more than 10 feet from a fixture, the potable water distribution system shall		☐	☐	☐	☐	☐

FEATURE OR MEASURE	LEVELS APPLICANT TO SELECT ELECTIVE MEASURES			VERIFICATIONS ENFORCING AGENCY TO SPECIFY VERIFICATION METHOD		
	Mandatory	Prerequisites and electives[1]		Enforcing Agency	Installer or Designer	Third party
		Tier 1	Tier 2			
convey hot water using a method designed to minimize wait time for hot water to arrive at the fixture.						
Lighting						
A4.209.1 Building lighting consists of at least 90% ENERGY STAR qualified hard-wired fixtures.		☐	☐	☐	☐	☐
Appliances						
A4.210.1 Each appliance provided by the builder meets ENERGY STAR if an ENERGY STAR designation is applicable for that appliance.		☐	☐	☐	☐	☐
Renewable Energy						
A4.211.1 Install a solar photovoltaic (PV) system in compliance with the California Energy Commission New Solar Homes Partnership (NSHP).[1,2] Install energy efficiency measures meeting either Tier I or Tier II below. Tier 1. Exceed the California Energy Code requirements, based on the 2008 Energy Efficiency Standards requirements by 15%. Tier 2. Exceed the California Energy Code requirements, based on the 2008 Energy Efficiency Standards requirements by 30%. Solar water heating may be used to assist in meeting the energy efficiency requirements of either Tier I or Tier II. 3. In addition, for either Tier I or II, each appliance provided by the builder must be Energy Star if an Energy Star designation is applicable for that appliance. 4. Information on NSHP incentives available through the California Energy Commission may be obtained at the "Go Solar California" website: www.GoSolarCalifornia.ca.gov/nshp/index.html. Notwithstanding, a single family residential property is exempt from the requirements of installing a solar photovoltaic (PV) system if the property meets the requirements of section A4.211.3 and A4.211.4. This exception, however, does not apply if the property owner of a single family residential property chooses to volunarily comply with CALGreen Tier 1 or Tier 2 requirements.	☒[BH2]	☒[BH2]	☒[BH2] ☐			☒ ☒
A4.211.2 A solar water heating system is installed.		☐	☐	☐	☐	☐
A4.211.3 Space on the roof surface and penetrations through the roof surface are provided for future solar installation.		☐	☐	☐	☐	☐
A4.211.4 A minimum one inch conduit is provided from the electrical service equipment for the future installation of a photovoltaic (PV) system.		☐	☐	☐	☐	☐
Elevators, Escalators and Other Equipment						
Innovative Concepts and Local Environmental Conditions						
A4.213.1 Items in this section are necessary to address innovative concepts or local environmental conditions. Item 1. Item 2. Item 3.		☐ ☐ ☐	☐ ☐ ☐	☐ ☐ ☐	☐ ☐ ☐	☐ ☐ ☐
WATER EFFICIENCY AND CONSERVATION						
Indoor Water Use						
4.303.1 Indoor water use shall be reduced by at least 20% using one of the following methods. 1. Water saving fixtures or flow restrictors shall be used. 2. A 20% reduction in baseline water use shall be demonstrated.	☒ 7/21/2011			☐	☐	☐

FEATURE OR MEASURE	LEVELS APPLICANT TO SELECT ELECTIVE MEASURES			VERIFICATIONS ENFORCING AGENCY TO SPECIFY VERIFICATION METHOD		
	Mandatory	Prerequisites and electives[1]		Enforcing Agency	Installer or Designer	Third party
		Tier 1	Tier 2			
4.303.2 When using the calculation method specified in Section 4.303.1, multiple showerheads shall not exceed maximum flow rates.	☒ 7/21/2011			☐	☐	☐
4.303.3 Plumbing fixtures (water closets and urinals) and fittings (faucets and showerheads) shall comply with specified performance requirements.	☒ 7/21/2011			☐	☐	☐
A4.303.1 Kitchen faucets and dishwashers shall comply with this section. Tier 1. The maximum flow rate at a kitchen sink faucet shall not be greater than 1.5 gallons per minute at 60 psi. Tier 2. In addition to the kitchen faucet requirements for Tier 1, dishwashers in Tier 2 buildings shall be ENERGY STAR qualified and not use more than 5.8 gallons of water per cycle		☒[2]	☒[2] ☒[2]	☐	☐	☐
A4.303.2 Non-water supplied urinals or waterless toilets are installed.		☐	☐	☐	☐	☐
Outdoor Water Use						
4.304.1 Automatic irrigation systems controllers installed at the time of final inspection shall be weather-based. [BH1]	☒[BH1]			☐	☐	☐
A4.304.1 Install a low-water consumption irrigation system which minimizes the use of spray type heads.		☐	☐	☐	☐	☐
A4.304.2 A rainwater capture, storage and re-use system is designed and installed.		☐	☐	☐	☐	☐
A4.304.3 A water budget shall be developed for landscape irrigation.		☐	☐	☐	☐	☐
A4.304.4 Provide water efficient landscape irrigation design that reduces the use of potable water. Tier 1. Does not exceed 65% of ETo times the landscape area. Tier 2. Does not exceed 60% of ETo times the landscape area.		☒[2]	☒[2]	☐	☐	☐
A4.304.5 A landscape design is installed which does not utilize potable water.		☐	☐	☐	☐	☐
WATER REUSE SYSTEMS						
A4.305.1 Piping is installed to permit future use of a graywater irrigation system served by the clothes washer or other fixtures.	☒[BH2]	☒[BH2]	☒[BH2]	☐	☐	☐
A4.305.2 Recycled water piping is installed.		☐	☐	☐	☐	☐
A4.305.3 Recycled water is used for landscape irrigation.		☐	☐	☐	☐	☐
Innovative Concepts and Local Environmental Conditions						
A4.306.1 Items in this section are necessary to address innovative concepts or local environmental conditions. Item 1. Item 2. Item 3.	☐ ☐ ☐	☐ ☐ ☐	☐ ☐ ☐	☐ ☐ ☐	☐ ☐ ☐	☐ ☐ ☐
MATERIAL CONSERVATION AND RESOURCE EFFICIENCY						
Foundation Systems						
A4.403.1 A Frost-Protected Shallow Foundation (FPSF) is designed and constructed. [BH1]	☒[BH1]					
A4.403.2 Cement use in foundation mix design is reduced. Tier 1. Not less than a 20% reduction in cement use. Tier 2. Not less than a 25% reduction in cement use.		☒[2]	☒[2]	☐	☐	☐
Efficient Framing Techniques						
A4.404.1 Beams and headers and trimmers are the minimum size to adequately support the load.		☐	☐	☐	☐	☐
A4.404.2 Building dimensions and layouts are designed to minimize waste.		☐	☐	☐	☐	☐
A4.404.3 Use pre-manufactured building systems to eliminate solid sawn lumber whenever possible.		☐	☐	☐	☐	☐
A4.404.4 Material lists are included in the plans which		☐	☐	☐	☐	☐

FEATURE OR MEASURE	LEVELS APPLICANT TO SELECT ELECTIVE MEASURES			VERIFICATIONS ENFORCING AGENCY TO SPECIFY VERIFICATION METHOD		
	Mandatory	Prerequisites and electives[1]		Enforcing Agency	Installer or Designer	Third party
		Tier 1	Tier 2			
specify material quantity and provide direction for on-site cuts.						
Material Sources						
A4.405.1 One or more of the following building materials, that do not require additional resources for finishing are used: 1. Exterior trim not requiring paint or stain. 2. Windows not requiring paint or stain. 3. Siding or exterior wall coverings which do not require paint or stain.		☐	☐	☐	☐	☐
A4.405.2 Floors that do not require additional coverings are used including but not limited to stained, natural, or stamped concrete floors.		☐	☐	☐	☐	☐
A4.405.3 Post-consumer or pre-consumer recycled content value (RCV) materials are used on the project. Tier 1. Not less than a 10% recycled content value. Tier 2. Not less than a 15% recycled content value.		☒[2]	☒[2]	☐	☐	☐
A4.405.4 Renewable source building products are used.		☐	☐	☐	☐	☐
Enhanced Durability and Reduced Maintenance						
4.406.1 Joints and openings. Annular spaces around pipes, electric cables, conduits, or other openings in plates at exterior walls shall be protected against the passage of rodents by closing such openings with cement mortar, concrete masonry or similar method acceptable to the enforcing agency.	☒			☐	☐	☐
Water Resistance and Moisture Management						
A4.407.1 Install foundation and landscape drains.		☐	☐	☐	☐	☐
A4.407.2 Install gutter and downspout systems to route water at least 5 feet away from the foundation or connect to landscape drains which discharge to a dry well, sump, bioswale, rainwater capture system or other approved on-site location.		☐	☐	☐	☐	☐
A4.407.3 Provide flashing details on the building plans and comply with accepted industry standards or manufacturer's instructions.		☐	☐	☐	☐	☐
A4.407.4 Protect building materials delivered to the construction site from rain and other sources of moisture.	☒[BH2]	☒[BH2]	☒[BH2]	☐	☐	☐
A4.407.5 Deleted~~In Climate Zone 16 an ice/water barrier is installed at roof valleys, eaves and wall to roof intersections.~~						
A4.407.6 Exterior doors to the dwelling are protected to prevent water intrusion.		☐	☐	☐	☐	☐
A4.407.7 A permanent overhang or awning at least 2 feet in depth is provided.		☐	☐	☐	☐	☐
Construction Waste Reduction, Disposal and Recycling						
4.408.1 A minimum of 50% of the construction waste generated at the site is diverted to recycle or salvage.	☒			☐	☐	☐
4.408.2 Where a local jurisdiction does not have a construction and demolition waste management ordinance, a construction waste management plan shall be submitted for approval to the enforcing agency.	☒			☐	☐	☐
A4.408.1 Construction waste generated at the site is diverted to recycle or salvage in compliance with one of the following: 1. Tier 1 at least a 65% reduction 2. Tier 2 at least a 75% reduction **Exception:** Equivalent waste reduction methods are developed by working with local agencies.		☒[2]	☒[2]	☐ ☐	☐ ☐	☐ ☐
Building Maintenance and Operation						
4.410.1 An operation and maintenance manual shall be provided to the building occupant or owner.	☒			☐	☐	☐
Innovative Concepts and Local Environmental Conditions						
A4.411.1 Items in this section are necessary to address						

FEATURE OR MEASURE	LEVELS APPLICANT TO SELECT ELECTIVE MEASURES			VERIFICATIONS ENFORCING AGENCY TO SPECIFY VERIFICATION METHOD		
	Mandatory	Prerequisites and electives[1]		Enforcing Agency	Installer or Designer	Third party
		Tier 1	Tier 2			
innovative concepts or local environmental conditions. Item 1. Item 2. Item 3.	☐ ☐ ☐	☐ ☐ ☐	☐ ☐ ☐	☐ ☐ ☐	☐ ☐ ☐	☐ ☐ ☐
ENVIRONMENTAL QUALITY						
Fireplaces						
4.503.1 Any installed gas fireplace shall be a direct vent sealed-combustion type. Any installed woodstove or pellet stove shall comply with US EPA Phase II emission limits where applicable. Woodstoves, pellet stoves and fireplaces shall also comply with applicable local ordinances.	☒			☐	☐	☐
Pollutant Control						
4.504.1 Duct openings and other related air distribution component openings shall be covered during construction.	☒			☐	☐	☐
4.504.2.1 Adhesives, sealants and caulks shall be compliant with VOC and other toxic compound limits.	☒			☐	☐	☐
4.504.2.2 Paints, stains and other coatings shall be compliant with VOC limits.	☒			☐	☐	☐
4.504.2.3 Aerosol paints and coatings shall be compliant with product weighted MIR limits for ROC and other toxic compounds.	☒			☐	☐	☐
4.504.2.4 Documentation shall be provided to verify that compliant VOC limit finish materials have been used.	☒			☐	☐	☐
4.504.3 Carpet and carpet systems shall be compliant with VOC limits.	☒			☐	☐	☐
4.504.4 50 percent of floor area receiving resilient flooring shall comply with the VOC-emission limits defined in the Collaborative for High Performance Schools (CHPS) Low-emitting Materials List or be certified under the Resilient Floor Covering Institute (RCFI) FloorScore program.	☒					
4.504.5 Particleboard, medium density fiberboard (MDF), and hardwood plywood used in interior finish systems shall comply with low formaldehyde emission standards.	☒			☐	☐	☐
A4.504.1 Meet the formaldehyde limits contained in Table 4.504.6 before the mandatory compliance date, or use composite wood products made with either California Air Resources Board approved no-added formaldehyde (NAF) resins or ultra-low emitting formaldehyde (ULEF) resins.		☐	☐	☐	☐	☐
A4.504.2 Install VOC compliant resilient flooring systems. Tier 1. At least 80% of the resilient flooring installed shall comply. Tier 2. At least 90% of the resilient flooring installed shall comply.	☒[BH2]	☒[2]	☒[2]	☐	☐	☐
A4.504.3 Thermal insulation installed in the building shall meet the following requirements: Tier 1. Install thermal insulation in compliance with the VOC-emission limits defined in Collaborative for High Performance Schools (CHPS) Low-emitting Materials List. Tier 2. Install insulation which contains No-Added Formaldehyde (NAF) and is in compliance with the VOC-emission limits defined in Collaborative for High Performance Schools (CHPS) Low-emitting Materials List.	☒[BH2]	☒[2]	☒[2]	☐	☐	☐
Interior Moisture Control						
4.505.2 Vapor retarder and capillary break is installed at slab on grade foundations.	☒			☐	☐	☐
4.505.3 Moisture content of building materials used in wall and floor framing is checked before enclosure.	☒			☐	☐	☐
Indoor Air Quality and Exhaust						
4.506.1 Exhaust fans which terminate outside the building are provided in every bathroom.	☒			☐	☐	☐
A4.506.1 Higher than MERV 6 filters are installed on central air or ventilation systems.	☒[BH2]	☒[BH2]	☒[BH2]	☐	☐	☐

FEATURE OR MEASURE	LEVELS APPLICANT TO SELECT ELECTIVE MEASURES			VERIFICATIONS ENFORCING AGENCY TO SPECIFY VERIFICATION METHOD		
	Mandatory	Prerequisites and electives[1]		Enforcing Agency	Installer or Designer	Third party
		Tier 1	Tier 2			
A4.506.2 Direct vent appliances are used or isolated from the conditioned space.		☐	☐	☐	☐	☐
Environmental Comfort						
4.507.1 Whole house exhaust fans shall have insulated louvers or covers which close when the fan is off. Covers or louvers shall have a minimum insulation value of R-4.2.	☒			☐	☐	☐
4.507.2. Duct systems are sized, designed, and equipment is selected using the following methods: 1. Establish heat loss and heat gain values according to ACCA Manual J or equivalent. 2. Size duct systems according to ACCA 29-D (Manual D) or equivalent. 3. Select heating and cooling equipment according to ACCA 36-S (Manual S) or equivalent.	☒			☐	☐	☐
Outdoor Air Quality Reserved						
Innovative Concepts and Local Environmental Conditions						
A4.509.1 Items in this section are necessary to address innovative concepts or local environmental conditions. Item 1. Item 2. Item 3.		☐ ☐ ☐	☐ ☐ ☐	☐ ☐ ☐	☐ ☐ ☐	☐ ☐ ☐
INSTALLER AND SPECIAL INSPECTOR QUALIFICATIONS						
Qualifications						
702.1 HVAC system installers are trained and certified in the proper installation of HVAC systems.	☒			☐	☐	☐
702.2 Special inspectors employed by the enforcing agency must be qualified and able to demonstrate competence in the discipline they are inspecting.	☒			☐	☐	☐
Verifications						
703.1 Verification of compliance with this code may include construction documents, plans, specifications builder or installer certification, inspection reports, or other methods acceptable to the enforcing agency which show substantial conformance.	☒			☐	☐	☐

1. Green building measures listed in this table may be mandatory if adopted by a city, county, or city and county as specified in Section 101.7.
2. Required prerequisite for this Tier.

BH1. City of Beverly Hills code amendment

BH2. City of Beverly Hills amended this section as part of the mandatory minimum code requirements.

"Division A5.7 checklist of Appendix A5 of the California Green Building Standards Code is amended to read as follows:

CITY OF BEVERLY HILLS
&
RESIDENTIAL OCCUPANCIES
(7 STORIES OR MORE)
APPLICATION CHECKLIST

APPLICATION CHECKLIST FOR BSC	Mandatory	VOLUNTARY	
		Tier 1	Tier 2
REQUIREMENTS			
Project meets all of the requirements of Divisions 5.1 through 5.5.	☒	☐	☐
Planning and Design			
Site Selection			

APPLICATION CHECKLIST FOR BSC	Mandatory	VOLUNTARY	
		Tier 1	Tier 2
A5.103.1 Community connectivity. Locate project on a previously developed site within a 1/2 mile radius of at least ten basic services, listed in Section A5.103.1.		☐	☐
A5.103.2 Brownfield or greyfield site redevelopment or infill area development. Select for development a brownfield in accordance with Section A5. 103.2.1 or on a greyfield or infill site as defined in Section A5.102. **A5.103.3.1 Brownfield redevelopment.** Develop a site documented as contaminated and fully remediated or on a site defined as a brownfield.		☐	☐
Site Preservation			
A5.104.1.1 Local zoning requirement in place. Exceed the zoning's open space requirement for vegetated open space on the site by 25 percent.		☐	☐
A5.104.1.2 No local zoning requirement in place. Provide vegetated open space area adjacent to the building equal to the building footprint area.		☐	☐
A5.104.1.3 No open space required in zoning ordinance. Provide vegetated open space equal to 20 percent of the total project site area.		☐	☐
Deconstruction and Reuse of Existing Structures			
A5.105.1.1 Existing building structure. Maintain at least 75 percent of existing building structure (including structural floor and roof decking) and envelope (exterior skin and framing) based on surface area. **Exceptions:** 1. Window assemblies and nonstructural roofing material. 2. Hazardous materials that are remediated as a part of the project. 3. A project with an addition of more than two times the square footage of the existing building.		☐	☐
A5.105.1.2 Existing nonstructural elements. Reuse existing interior nonstructural elements (interior walls, doors, floor coverings and ceiling systems) in at least 50 percent of the area of the completed building (including additions). **Exception:** A project with an addition of more than two times the square footage of the existing building.		☐	☐
A5.105.1.3 Salvage. The proposed structure utilizes reused items that meet current standards for at least 15% for Tier I and 25% for Tier II in one of the following categories, or a combination of multiple categories totaling that required percentage: [BH1] 1. Light fixtures 2. Plumbing fixtures 3. Doors and trim 4. Masonry 5. Electrical devices 6. Appliances 7. Foundations or portions of foundations		☐	☐
Site Development			
5.106.1 Storm water pollution prevention plan. For projects of one acre or less, develop a Storm Water Pollution Prevention Plan (SWPPP) that has been designed, specific to its site, conforming to the State Storm water NPDES Construction Permit or local ordinance, whichever is stricter, as is required for projects over one acre. The plan should cover prevention of soil loss by storm water run-off and/or wind erosion, of sedimentation and/or of dust/particulate matter air pollution.	☒		
A5.106.2 Storm water design. Design storm water runoff rate and quantity in conformance with Section A5.106.3.1 and storm water runoff quality by Section A5.106.3.2 or by local requirements, whichever are stricter.		☐	☐
A5.106.2.I Storm water runoff rate and quantity. Implement a storm water management plan resulting in no net increase in rate and quantity of storm water runoff from existing to developed conditions. **Exception:** If the site is already greater than 50 percent impervious, implement a storm water management plan resulting in a 25 percent decrease in rate and quantity.		☐	☐
A5.106.2.2 Storm water runoff quality. Use post construction treatment control best management practices (BMPs) to mitigate (infiltrate, filter or treat) storm water runoff from the 85th percentile 24-hour runoff event (for volume-based BMPs) or the runoff produced by a rain event equal to two times the 85th percentile hourly intensity (for flow-based BMPs).			
A5.106.3 Low impact development (LID). Reduce peak runoff in compliance with Section 5.106.3.1. Employ at least two of the following methods or other best		☐	☐

APPLICATION CHECKLIST FOR BSC	Mandatory	VOLUNTARY	
		Tier 1	Tier 2
management practices to allow rainwater to soak into the ground, evaporate into the air or collect in storage receptacles for irrigation or other beneficial uses. LID strategies include, but are not limited to those listed in Section A5.106.4.			
5.106.4 Bicycle parking and changing rooms. Comply with Sections 5.106.4.1 and 5.106.4.2; or meet local ordinance, whichever is stricter. **5.106.4.1 Short-Term bicycle parking.** If the project is anticipated to generate visitor traffic, provide permanently anchored bicycle racks within 200 feet of the visitors' entrance, readily visible to passers-by, for 5 percent of visitor motorized vehicle parking capacity, with a minimum of one two-bike capacity rack. **5.106.4.2 Long-Term bicycle parking.** For buildings with over 10 tenant-occupants, provide secure bicycle parking for 5 percent of tenant-occupied motorized vehicle parking capacity, with a minimum of one space. **A5.106.4.3 Changing rooms.** For buildings with over 10 tenant-occupants, provide changing/shower facilities in accordance with Table A5.106.4.3 or document arrangements with nearby changing/shower facilities.	☒ ☒ ☒	☐	☐
A5.106.5.1 Designated parking for fuel-efficient vehicles. Provide designated parking for any combination of low-emitting, fuel-efficient and carpool/van pool vehicles as shown in: Table A5.106.5.1.1 for Tier 1 at 10 percent of total spaces Table A5.106.5.1.2 for Tier 2 at 12 percent of total spaces **5.106.5.2 Designated parking.** Provide designated parking for any combination of low-emitting, fuel-efficient and carpool/van pool vehicles as shown in Table 5.106.6.2.	☒	☒	☒
A5.106.5.3.1 Electric vehicle supply wiring. For each space required in Table A406.1.6.2.1, provide one 120 V AC 20 amp and one *208/240*V 40 amp, grounded AC outlets or panel capacity and conduit installed for future outlets and as shown in Table A5.106.5.3.1.	☒[BH2]	☒[BH2]	☒[BH2]
A5.106.6 Deleted ~~**Parking capacity.** Design parking capacity to meet but not exceed minimum local zoning requirements.~~ ~~**A5.106.6.1 Reduce parking capacity.** With the approval of the enforcement authority, employ strategies to reduce on-site parking area by~~ ~~1. Use of on street parking or compact spaces, illustrated on the site plan or~~ ~~2. Implementation and documentation of programs that encourage occupants to carpool, ride share or use alternate transportation.~~	☒[BH1]	☐ ☐	☐ ☐
A5.106.7 Exterior walls. Meet requirements in the current edition of the *California Energy Code* and select one of the following for wall surfaces: 1. Provide vegetative or man-made shading devices for east-, south- and west-facing walls with windows. 2. Use wall surfacing with minimum SRI 25 (aged), for 75 percent of opaque wall areas.	☐ ☐		
5.106.8 Light pollution reduction. Comply with lighting power requirements in the *California Energy Code* and design interior and exterior lighting such that zero direct-beam illumination leaves the building site. Meet or exceed exterior light levels and uniformity ratios for lighting zones 1 – 4 as defined in Chapter 10 of the *California Administrative Code,* using the following strategies: 1. Shield all exterior luminaires or use cutoff luminaires. 2. Contain interior lighting within each source. 3. Allow no more than .01 horizontal foot candle 15 ft beyond the site. 4. Contain all exterior lighting within property boundaries. **Exception:** See Part 2, Chapter 12, Section 1205.6 for campus lighting requirements for parking facilities and walkways.	☒ ☒ ☒ ☒ ☒		
A5.106.9 Building orientation. Locate and orient the building as follows: 1. Long sides facing north and south 2. Protect the building from thermal loss, drafts and degradation of the building envelope caused by wind and wind-driven materials.		☐ ☐	☐ ☐
5.106.10 Grading and paving. The site shall be planned and developed to keep surface water away from buildings. Construction plans shall indicate how site grading or a drainage system will manage all surface water flows.	☒		
A5.106.11 Heat island effect. Reduce nonroof heat islands and roof heat islands as follows: **A5.106.11.1 Hardscape alternatives.** Use one or a combination of strategies 1 through 3 for 50 percent of site hardscape or put 50 percent of parking underground. 1. Provide shade (mature within 5 years of occupancy). 2. Use light colored / high-albedo materials. 3. Use open-grid pavement system. **A5.106.11.2 Cool roof.** Use roofing materials having solar reflectance, thermal		☐ ☐ ☐ ☐	☐ ☐ ☐ ☐

APPLICATION CHECKLIST FOR BSC	Mandatory	VOLUNTARY	
		Tier 1	Tier 2
emittance or Solar Reflectance Index (SRI)3 equal to or greater than the values shown in: Table A5.106.11.2.1 - Tier 1 or Table A5.106.11.2.2 - Tier 2		☐ ☐	☐ ☐
Energy Efficiency			
Performance Requirements			
5.201.1 Scope. The California Energy Commission will continue to adopt mandatory building standards.[1]	☒		
A5.203.1 Energy performance. Using an Alternative Calculation Method approved by the California Energy Commission, calculate each nonresidential building's TDV energy and CO_2 emissions and compare it to the standard or "budget" building. **A5.203.1.1 Tier 1.** Exceed *California Energy Code* requirements, based on the 200S Energy Efficiency Standards, by 15 percent. **A5.203.1.2 Tier 2.** Exceed *California Energy Code* requirements, based on the 200S Energy Efficiency Standards, by 30 percent.	☒[BH2]	☒[2]	☒[2]
Perscriptive Measures			
A5.204.1 ENERGY STAR equipment and appliances. All equipment and appliances provided by the builder shall be ENERGY STAR labeled if ENERGY STAR is applicable to that equipment or appliance.		☐	☐
A5.204.2 Energy monitoring. Provide submetering or equivalent combinations of sensor measurements and thermodynamic calculations, if appropriate, to record energy use data for each major energy system in the building. **A5.204.2.1 Data storage.** The data management system must be capable of electronically storing energy data and creating user reports showing hourly, daily, monthly and annual energy consumption for each major energy system. **A5.204.2.2 Data access.** Hourly energy use data shall be accessible through a central data management system and must be available daily.		☐ ☐ ☐	☐ ☐ ☐
A5.204.3 Demand response. HV AC systems with Direct Digital Control Systems and centralized lighting systems shall include preprogrammed demand response strategies that are automated with either a Demand Response Automation Internet Software Client or dry contact relays. **A5.204.3.1 HVAC.** The preprogrammed demand response strategies should be capable of reducing the peak HV AC demand by cooling temperature set point adjustment. **A5.204.3.2 Lighting.** The preprogrammed demand response strategies should be capable of reducing the total lighting load by a minimum 30 percent through dimming control or bi-level switching. **A5.204.3.3 Software clients.** The software clients will be capable of communicating with a DR Automation Server.		☐ ☐ ☐ ☐	☐ ☐ ☐ ☐
Renewable Energy			
A5.211.1 On-site renewable energy. Use on-site renewable energy for at least 1 percent of the electrical service overcurrent protection device rating calculated in accordance with the 2007 *California Electrical Code* or 1 KW, whichever is greater, in addition to the electrical demand required to meet 1 percent of natural gas and propane use calculated in accordance with the 2007 *California Plumbing Code.* **A5.211.1.1 Documentation.** Calculate renewable on-site system to meet the requirements of Section A5.211.1. Factor in net-metering, if offered by local utility, on an annual basis. **A5.211.3 Green power.** Participate in the local utility's renewable energy portfolio program that provides a minimum of 50 percent electrical power from renewable sources. Maintain documentation through utility billings. **A5.211.4 Prewiring for future solar.** Install conduit from the building roof or eave to a location within the building identified as suitable for future installation of a charge controller (regulator) and inverter. **A5.211.4.1 Off-grid prewiring for future solar.** If battery storage is anticipated, conduit should run to a location within the building that is stable, weather-proof, insulated against very hot and very cold weather and isolated from occupied spaces.	☒[BH2] ☒[BH2]	☒[BH2] ☒[BH2] ☐ ☐ ☐	☒[BH2] ☒[BH2] ☐ ☐ ☐
Elevators, Escalators and Other Equipment			
A5.212.1 Elevators and escalators. In buildings with more than elevator or two escalators, provide controls to reduce the energy demand of elevators and reduce the speed of escalators. Document the controls in the project specifications and		☐	☐

APPLICATION CHECKLIST FOR BSC	Mandatory	VOLUNTARY	
		Tier 1	Tier 2
commissioning plan.			
Energy Efficient Steel Framing			
A5.213.1 Steel Framing. Design for and employ techniques to avoid thermal bridging.		☐	☐
Water Efficiency and Conservation			
Indoor Water Use			
5.303.1 Meters. Separate meters shall be installed for the uses described in Sections 503.1.1 through 503.1.3.			
5.303.1.1 Buildings in excess of 50,000 square feet. Separate submeters shall be installed as follows:			
1. For each individual leased, rented or other tenant space within the building projected to consume more than 100 gal/day.	☒		
2. For spaces used for laundry or cleaners, restaurant or food service, medical or dental office, laboratory or beauty salon or barber shop projected to consume more than 100 gal/day.	☒		
5.303.1.2 Excess consumption. Any building within a project or space within a building that is projected to consume more than 1,000 gal/day.	☒	☐	☐
5.303.2 20 percent savings. A schedule of plumbing fixtures and fixture fittings that will reduce the overall use of potable water within the building by 20 percent shall be provided. (Calculate savings by Water Use Worksheets)	☒		
5.303.2.1 Multiple showerheads serving one shower. When single shower fixtures are served by more than one showerhead, the combined flow rate of all the showerheads shall not exceed the maximum flow rates specified in the 20 percent reduction column contained in Table 5.303.2.3 or the shower shall be designed to only allow one showerhead to be in operation at a time.	☒		
A5.303.2.3.1 Tier 1 - 30 percent savings. A schedule of plumbing fixtures and fixture fittings that will reduce the overall use of potable water within the building by 30 percent shall be provided.		☒	
A5.303.2.3.2 Tier 2 - 35 percent savings. A schedule of plumbing fixtures and fixture fittings that will reduce the overall use of potable water within the building by 35 percent shall be provided.			☒
A5.303.2.3.3 40 percent savings. A schedule of plumbing fixtures and fixture fittings that will reduce the overall use of potable water within the building by 40 percent shall be provided. (Calculate savings by Water Use Worksheets)		☐	☐
5.303.4 Wastewater reduction. Each building shall reduce the generation of wastewater by one of the following methods:	As applicable		
1. The installation of water-conserving fixtures or	☒		
2. Utilizing nonpotable water systems.	☒		
A5.303.3 Appliances. [BH1]			
1. Clothes washers shall have a maximum Water Factor (WF) that will reduce the use of water.		☐	☐
2. Dishwashers shall meet the criteria in A5.303.3(2)(a) and (b).		☐	☐
3. Ice makers shall be air cooled.		☐	☐
4. Food steamers shall be connection-less or boiler-less.		☐	☐
5. No water softeners are discharging to the sewer system.		☐	☐
A5.303.5 Dual plumbing. New buildings and facilities shall be dual plumbed for potable and recycled water systems.		☐	☐
5.303.6 Plumbing fixtures and fittings. Plumbing fixtures (water closets and urinals) and fittings (faucets and showerheads) shall comply with the requirements listed for each type in Items listed in Table 5.303.6.	As applicable		
1. Water closets (toilets) - flushometer type	☒		
2. Water closets (toilets) - tank type	☒		
3. Urinals	☒		
4. Public lavatory faucets	☒		
5. Public metering self-closing faucets	☒		
6. Residential bathroom lavatory sink faucets	☒		
7. Residential kitchen faucets	☒		
8. Residential shower heads	☒		
9. Single shower fixtures served by more than one showerhead	☒		
Outdoor Water Use			
5.304.1 Water budget. A water budget shall be developed for landscape irrigation use.[1]	☒		
5.304.2 Outdoor potable water use. For new water service, separate meters or	☒		

APPLICATION CHECKLIST FOR BSC	Mandatory	VOLUNTARY	
		Tier 1	Tier 2
sub meters shall be installed for indoor and outdoor potable water use for landscaped areas between 1,000 square feet and 5,000 square feet. **A5.304.2.1 Outdoor potable water use.** For new water service not subject to the provisions of *Water Code* Section 535, separate meters or submeters shall be installed for indoor and outdoor potable water use for landscaped areas between 500 square feet and 1,000 square feet.			
5.304.3 Irrigation design. In new nonresidential projects with between 1,000 and 2,500 square feet of landscaped area (the level at which the MLO applies), install irrigation controllers and sensors which include the following criteria and meet manufacturer's recommendations. **5.304.3.1 Irrigation controllers.** Automatic irrigation system .controllers installed at the time of final inspection shall comply with the following: 1. Controllers shall be weather- or soil moisture-based controllers that automatically adjust irrigation in response to changes in plants' needs as weather conditions change. 2. Weather-based controllers without integral rain sensors or communication systems that account for local rainfall shall have a separate wired or wireless rain sensor which connects or communicates with the controller(s). Soil moisture-based controllers are not required to have rain sensor input.	☒ As applicable ☒		
A5.304.4 Potable water reduction. Provide water efficient landscape irrigation design that reduces by the use of potable water. **A5.304.4.1 Tier 1** - Reduce the use of potable water to a quantity that does not exceed 60 percent of ETo times the landscape area. **A5.304.4.2 Tier 2** - Reduce the use of potable water to a quantity that does not exceed 55 percent of ETo times the landscape area. Methods used to accomplish the requirements of this section shall include, but not be limited to, the items listed in AS.304.4. **A5.304.4.3 Verification of compliance.** A calculation demonstrating the applicable potable water use reduction required by this section shall be provided.		☒ ☒	☒ ☒
A5.304.5 Potable water elimination. Provide a water efficient landscape irrigation design that eliminates the use of potable water beyond the initial requirements for plant installation and establishment. Methods used to accomplish the requirements of this section shall include, but not be limited to the items listed in Section A5.304.4.		☐	☐
A5.304.6 Restoration of areas disturbed by construction. Restore all areas disturbed during construction by planting with local native and/or noninvasive vegetation.		☐	☐
A5.304.7 Previously developed sites. On previously developed or graded sites, restore or protect at least 50 percent of the site area with native and/or noninvasive vegetation.		☐	☐
A5.304.8 Graywater irrigation system. Install graywater collection system for onsite subsurface irrigation using graywater.		☐	☐
Material Conservation and Resource Efficiency			
Efficient Framing Systems			
A5.404.1 Wood framing. Employ advanced wood framing techniques or OVE, as permitted by the enforcing agency.		☐	☐
Material Sources			
A5.405.1 Regional materials. Select building materials or products for permanent installation on the project that have been harvested or manufactured in California or within 500 miles of the project site, meeting the criteria listed in Section A5.405.1.	☒BH2	☒BH2	☒BH2
A5.405.2 Bio-based materials. Select bio-based building materials per Section AS.40S.2.1 or A5.405.2.2. **A5.405.2.1 Certified wood products.** Certified wood is an important component of green building strategies and the California Building Standards Commission will continue to develop a standard through the next code cycle. **A5.405.2.2 Rapidly renewable materials.** Use materials made from plants harvested within a ten-year cycle for at least 2.5percent of total materials value, based on estimated cost.	☒BH2	☐ ☒BH2	☐ ☒BH2
A5.405.3 Reused materials. Use salvaged, refurbished, refinished or reused materials for at least 5 percent of the total value, based on estimated cost of materials on the project.	☒BH2	☒BH2	☒BH2
A5.405.4 Recycled content, Tier 1. Use materials, equivalent in performance to virgin materials, with postconsumer or preconsumer recycled content value (RCV)	☒BH2	☒BH2	

APPLICATION CHECKLIST FOR BSC	Mandatory	VOLUNTARY	
		Tier 1	Tier 2
equaling at least 10 percent of the total value, based on estimated cost of materials on the project. Provide documentation as to the respective values. **A5.405.4.1 Recycled content, Tier 2.** Use materials, equivalent in performance to virgin materials, with postconsumer or preconsumer recycled content value (RCV) for a minimum of 15 percent of the total value, based on estimated cost of materials on the project. Provide documentation as to the respective values.			☒[2]
A5.405.5 Cement and concrete. Use cement and concrete made with recycled products and complying with the following sections: **A5.405.5.1 Cement.** Meet the following standards for cement: 1. Portland cement shall meet ASTM C 150. 2. Blended hydraulic cement shall meet ASTM C 595.		☐	☐
A5.405.5.2 Concrete. Unless otherwise directed by the engineer, use concrete manufactured with cementitious materials in accordance with Sections A5.405.5.2.1 and A5.405.5.2.2, as approved by the enforcing agency. **A5.405.5.2.1 Supplementary cementitious materials (SCMs).** Use concrete made with one or more of the SCMs listed in Section A5.405.5.2.1.		☐	☐
A5.405.5.2.1.1 Mix design equation. Use any combination of one or more SCMs, satisfying Equation A4.5-1. **Exception:** Minimums for concrete products requiring high early strength may be lower as directed by the engineer.		☐	☐
A5.405.5.3 Additional means of compliance. Any of the following measures may be employed for the production of cement or concrete, depending on their availability and suitability, in conjunction with Section A5.405.5.2. **A5.405.5.3.1 Cement.** The following measures may be used in the manufacture of cement.			
A5.405.5.3.1.1 Alternative fuels. Where permitted by state or local air quality standards, use alternative fuels.		☐	☐
A5.405.5.3.1.2 Alternative power. Use alternate electric power generated at the cement plant and/or green power purchased from the utility meeting the requirements of Section A5.211.		☐	☐
A5.405.5.3.1.3 Alternative ingredients. Use inorganic processing additions and limestone meeting ASTM C ISO.		☐	☐
A5.405.5.3.2 Concrete. The following measures may be used in the manufacture of concrete,			
A5.405.5.3.2.1 Alternative energy. Use renewable or alternative energy meeting the requirements of Section A5.211.		☐	☐
A5.405.5.3.2.2 Recycled aggregates. Use concrete made with one or more of the materials listed in Section A5.405.5.3.2.2.		☐	☐
A5.405.5.3.2.3 Mixing water. Use water meeting ASTM C1602, either recycled water provided by the local water purveyor or water reclaimed from manufacturing processes.		☐	☐
Enhanced Durability and Reduced Maintenance			
A5.406.1.1 Service life. Select materials for longevity and minimal deterioration under conditions of use.		☐	☐
A5.406.1.2 Reduced maintenance. Select materials that require little, if any, finishing.		☐	☐
A5.406.1.3 Recyclability. Select materials that can be re-used or recycled at the end of their service life.		☐	☐
Weather Resistance and Moisture Management			
5.407.1 Weather protection. Provide a weather-resistant exterior wall and foundation envelope as required by *California Building Code* Section 1403.2 and *California Energy Code* Section 150, manufacturer's installation instructions or local ordinance, whichever is more stringent.[1]	☒		
5.407.2 Moisture control. Employ moisture control measures by the following methods; **5.407.2.1 Sprinklers.** Prevent irrigation spray on structures.	☒		
5.407.2.2 Entries and openings. Design exterior entries and openings to prevent water intrusion into buildings.	☒		
Construction Waste Reduction, Disposal and Recycling			
5.408.1 Construction waste diversion. Establish a construction waste management plan or meet local ordinance, whichever is more stringent.	☒		
5.408.2 Construction waste management plan. Submit plan per this section to enforcement authority.	☒		
5.408.2.1 Documentation. Provide documentation of the waste management	☒		

APPLICATION CHECKLIST FOR BSC	Mandatory	VOLUNTARY	
		Tier 1	Tier 2
plan that meets the requirements listed in Section 5.408.2 Items I thru 4 and the plan is accessible to the enforcement authority. **5.408.2.2 Isolated jobsites.** The enforcing agency may make exceptions to the requirements of this section when jobsites are located in areas beyond the haul boundaries of the diversion facility.		☐	☐
5.408.3 Construction waste. Recycle and/or salvage for reuse a minimum of 50 percent of nonhazardous construction and demolition debris or meet local ordinance, whichever is more stringent. **Exceptions:** 1. Excavated soil and land-clearing debris. 2. Alternate waste reduction methods developed by working with local agencies if diversion or recycle facilities capable of compliance with this item do not exist. **A5.408.3.1 Enhanced construction waste reduction.** Divert to recycle or salvage nonhazardous construction and demolition debris generated at the site in compliance with one of the following: Tier 1. At least a 65 percent reduction Tier 2. At least an 80 percent reduction **A5.408.3.1.1 Verification of compliance.** A copy of the completed waste management report shall be provided. **Exceptions:** 1. Excavated soil and land-clearing debris 2. Alternate waste reduction methods developed by working with local agencies if diversion or recycle facilities capable of compliance with this item do not exist	☒ ☒	☒[2]	☒[2]
5.408.4 Excavated soil and land clearing debris. 100 percent of trees, stumps, rocks and associated vegetation and soils resulting primarily from land clearing shall be reused or recycled.	☒		
Life Cycle Assessment			
A5.409.1 Materials and system assemblies. Select materials assemblies based on life cycle assessment of their embodied energy and/or green house gas emission potentials. See Sections A5.409.1.1 and A5.409.1.2 for available tools.		☐	☐
Building Maintenance and Operation			
5.410.1 Recycling by occupants. Provide readily accessible areas that serve the entire building and are identified for the depositing, storage and collection of nonhazardous materials for recycling.[1]	☒		
5.410.2 Commissioning. For new buildings 10,000 square feet and over, building commissioning for all building systems covered by T24, Part 6, process systems and renewable energy systems shall be included in the design and construction processes of the building project. Commissioning requirements shall include items listed in Section 5.410.2. **5.410.2.1 Owner's Project Requirements (OPR).** Documented before the design phase of the project begins the OPR shall include items listed in Section 5.410.4. **5.410.2.2 Basis of Design (BOD).** A written explanation of how the design of the building systems meets the OPR shall be completed at the design phase of the building project and updated periodically to cover the systems listed in Section 5.410.2.2. **5.410.2.3 Commissioning plan.** A commissioning plan describing how the project will be commissioned shall be started during the design phase of the building project and shall include items listed in Section 5.410.2.3. **5.410.2.4** Functional performance testing shall demonstrate the correct installation and operation of each component, system and system-to-system interface in accordance with the approved plans and specifications. **5.410.2.5 Documentation and training.** A Systems manual and systems operations training are required. **5.410.2.5.1 Systems manual.** The systems manual shall be delivered to the building owner or representative and facilities operator and shall include the items listed in Section 5.410.2.5.1. **5.410.2.5.2 Systems operations training.** The training of the appropriate maintenance staff for each equipment type and/or system shall include items listed in Section 5.410.2.5.2. **5.410.2.6 Commissioning report.** A complete report of commissioning process activities undertaken through the design, construction and reporting recommendations for postconstruction phases of the building project shall be completed and provided to the owner or representative.	☒ ☒ ☒ ☒ ☒ ☒ ☒ ☒ ☒		

APPLICATION CHECKLIST FOR BSC	Mandatory	VOLUNTARY	
		Tier 1	Tier 2
5.410.4 Testing and adjusting. Testing and adjusting of systems shall be required for buildings less than 10,000 square feet.			
5.410.4.2 Systems. Develop a written plan of procedures for testing and adjusting systems. Systems to be included for testing and adjusting shall include, as applicable to the project, the systems listed in Section 5.410.3.2.	☒		
5.410.4.3 Procedures. Perform testing and adjusting procedures in accordance with industry best practices and applicable national standards on each system.	☒		
5.410.4.3.1 HVAC balancing. Before a new space-conditioning system serving a building or space is operated for normal use, the system should be balanced in accordance with the procedures defined by national standards listed in Section 5.410.3.3.1.	☒		
5.410.4.4 Reporting. After completion of testing, adjusting and balancing, provide a final report of testing signed by the individual responsible for performing these services.	☒		
5.410.4.5 Operation and maintenance manual. Provide the building owner with detailed operating and maintenance instructions and copies of guaranties/warranties for each system prior to final inspection.	☒		
5.410.4.5.1 Inspections and reports. Include a copy of all inspection verifications and reports required by the enforcing agency.			
Environmental Quality			
Fireplaces			
5.503.1 Install only a direct-vent sealed-combustion gas or sealed wood-burning fireplace or a sealed woodstove and refer to residential requirements in the *California Energy Code,* Title 24, Part 6, Subchapter 7, Section 150.	☒		
5.503.1.1 Woodstoves. Woodstoves shall comply' with US EPA Phase II emission limits.	As applicable ☒		
Pollutant Control			
A5.504.1 Indoor air quality (IAQ) during construction. Maintain IAQ as provided in Sections A5.504.1.1 and A5.504.1.2.			
A5.504.1.1 Temporary ventilation. Provide temporary ventilation during construction in accordance with Section 121 of the *California Energy Code.* CCR. Title 24, Part 6 and Chapter 4 of CCR, Title 8 and as listed in Items 1 through 4 in Section A5.504.1.2.		☐	☐
A5.504.1.2 Additional IAQ measures. Employ additional measures as listed in Items 1 through 5 in Section A5.504.1.3.		☐	☐
A5.504.2 IAQ postconstruction. Flush out the building per Section AS.S04.2 prior to occupancy or if the building is occupied.		☐	☐
A5.504.2.1 IAQ Testing. A testing alternative may be employed after all interior finishes have been installed, using testing protocols recognized by the United State Environmental Protection Agency (U.S. EPA) and in accordance with Section A5.504.2.1.2. Retest as required in Section A5.504.2.1.3.		☐	☐
A5.504.2.1.1 Maximum levels of contaminants. Allowable levels of contaminant concentrations measured by testing shall not exceed the following:		As applicable	As applicable
1. Carbon Monoxide (CO): 9 parts per million. not to exceed outdoor levels by 2 parts per million;		☐	☐
2. Formaldehyde: 27 parts per billion;		☐	☐
3. Particulates (PMI0): 50 micrograms per cubic meter;		☐	☐
4. 4-Phenylcyclohexene (4-PCH): *6.5* micrograms per cubic meter; and		☐	☐
5. Total Volatile Organic Compounds (TVOC): 300 micrograms per cubic meter.		☐	☐
A5.504.2.1.2 Test protocols. Testing of indoor air quality should include the elements listed in Items 1 through 4.		☐	☐
A5.504.2.1.3 Noncomplying building areas. For each sampling area of the building exceeding the maximum concentrations specified in Section A5.504.2.1.l, flush out with outside air and retest samples taken from the same area. Repeat the procedures until testing demonstrates compliance.		☐	☐
5.504.3 Covering of duct openings and protection of mechanical equipment during construction. At the time of rough installation or during storage on the construction site and until final startup of the heating and cooling equipment, all duct and other related air distribution component openings shall be covered with tape, plastic, sheetmetal or other methods acceptable to the enforcing agency to reduce the amount of dust or debris which may collect in the system.	☒		

APPLICATION CHECKLIST FOR BSC	Mandatory	VOLUNTARY	
		Tier 1	Tier 2
5.504.4 Finish material pollutant control. Finish materials shall comply with Sections 5.504.4.1 through 5.504.4.4.			
5.504.4.1 Adhesives, sealants, caulks. Adhesives and sealants used on the project shall meet the requirements of the following standards.			
1. Adhesives, adhesive bonding primers, adhesive primers, sealants, sealant primers and caulks shall comply with local or regional air pollution control or air quality management district rules where applicable or SCAQMD Rule 1168 VOC limits, as shown in Tables 5.504.4.1 and 5.504.4.2.	☒		
2. Aerosol adhesives and smaller unit sizes of adhesives and sealant or caulking compounds (in units of product, less packaging, which do not weigh more than one pound and do not consist of more than 16 fluid ounces) shall comply with statewide VOC standards and other requirements, including prohibitions on use of certain toxic compounds, of *California Code of Regulations,* Title 17, commencing with Section 94507.	☒		
5.504.4.3 Paints and coatings. Architectural paints and coatings shall comply with Table 5.504.4.3 unless more stringent local limits apply.	☒		
5.504.4.3.1 Aerosol paints and coatings. Aerosol paints and coatings shall meet the Product-Weighted MIR Limits for ROC in Section 94522(a)(3) and other requirements, including prohibitions on use of certain toxic compounds and ozone depleting substances (CCR, Title 17, Section 94520 et seq).	☒		
5.504.4.3.2 Verification. Verification of compliance with this section shall be provided at the request of the enforcing agency.	☒		
5.504.4.4 Carpet systems. All carpet installed in the building interior shall meet the testing and product requirements of one of the standards listed in Section 5.504.4.4.	☒		
5.504.4.4.1 Carpet cushion. All carpet cushion installed in the building interior shall meet the requirements of the Carpet and Rug Institute Green Label program.	☒		
5.504.4.4.2 Carpet adhesive. All carpet adhesive shall meet the requirements of Table 804.4.1.	☒		
5.504.4.5 Composite wood products. Hardwood plywood, particleboard and medium density fiberboard composite wood products used on the interior or exterior of the building shall meet the requirements for formaldehyde as specified in Table 5.504.4.	☒		
A5.504.4.5.1 Early compliance with formaldehyde limits. Where complying composite wood product is readily available for nonresidential occupancies, meet Phase 2 requirements before the compliance dates indicated in Table 5.504.4.5 (Tier I) or use composite wood products made with either CARB-approved no-added formaldehyde (NAF) resins or CARB-approved ultra-low emitting formaldehyde (ULEF) resins (Tier II).	☒	☐	
5.504.4.5.2 Documentation. Verification of compliance with this section shall be provided as requested by the enforcing agency. Documentation shall include at least one the following.	☒	☐	☐
	As applicable		
1. Product certifications and specifications	☒		
2. Chain of custody certifications	☒		
3. Other methods acceptable to the enforcing agency	☒		
5.504.4.6 Resilient flooring systems. Comply with the VOC-emission limits defined in the 2009 CHPS criteria and listed on its Low-emitting Materials List (or Product Registry) or certified under the F1oorScore program of the Resilient Floor Covering Institute.	☒		
A5.504.4.6.1 Verification of compliance. Documentation shall be provided verifying that resilient flooring materials meet the pollutant emission limits.	☒		
A5.504.4.7 Resilient flooring systems, Tier 1. For 80 percent of floor area receiving resilient flooring, install resilient flooring complying with the VOC-emission limits defined in the 2009 CHPS criteria and listed on its Low-emitting Materials List (or Product Registry) or certified under the F1oorScore program of the Resilient Floor Covering Institute.		☒[2]	
A5.504.4.7.1 Resilient flooring systems, Tier 2. For 100 percent of floor area to scheduled to receive resilient flooring, install resilient flooring complying with the VOC-emission limits defined in the 2009 CHPS criteria and listed on its Low-emitting Materials List (or Product Registry) or certified under the F1oorScore program of the Resilient Floor Covering Institute.			☒[2]
A5.504.4.7.2 Verification of compliance. Documentation shall be provided verifying that resilient flooring materials meet the pollutant emission limits.		☒[2]	☒[2]
A5.504.4.8 Thermal insulation, Tier 1. Comply with Chapter 12-13 in Title 24, Part 12 and with the VOC-emission limits defined in 2009 CHPS criteria and listed on its Low-emitting Materials List.		☒[2]	
A5.504.4.8.1 Thermal insulation, Tier 2. Install No-Added Formaldehyde			☒[2]

APPLICATION CHECKLIST FOR BSC	Mandatory	VOLUNTARY	
		Tier 1	Tier 2
thermal insulation in addition to meeting Section A5.504.4.8. **A5.504.4.8.2 Verification of compliance.** Documentation shall be provided verifying that thermal insulation materials meet the pollutant emission limits. **A5.504.4.9 Acoustical ceilings and wall panels.** Comply with Chapter 8 in Title 24, Part 2 and with the VOC-emission limits defined in the 2009 CHPS criteria and listed on its Low-emitting Materials List (or Product Registry). **A5.504.4.9.1 Verification of compliance.** Documentation shall be provided verifying that acoustical finish materials meet the pollutant emission limits.		☒[2] ☐ ☐	☒[2] ☐ ☐
A5.504.S Hazardous particulates and chemical pollutants. Minimize and control pollutant entry into buildings and cross-contamination of regularly occupied areas. **A5.504.5.1 Entryway systems.** Install permanent entryway systems measuring at least six feet in the primary direction of travel to capture dirt and particulates at entryways directly connected to the outdoors as listed in Items 1 through 3 in Section A5.504.5.1. **A5.504.5.2 Isolation of pollutant sources.** In rooms where activities produce hazardous fumes or chemicals, exhaust them and isolate them from their adjacent rooms as listed in Items 1 through 3 in Section A5.504.5.2. **5.504.5.3 Filters.** In mechanically ventilated buildings, provide regularly occupied areas of the building with air filtration media for outside and return air prior to occupancy that provides at least a MERV of 8. **A5.504.5.3.1 Filters.** In mechanically ventilated buildings, provide regularly occupied areas of the building with air filtration media for outside and return air prior to occupancy that provides at least a MERV of 11.	☒	☐ ☐ ☐	☐ ☐ ☐
5.504.7 Environmental tobacco smoke (ETS) control. Prohibit smoking within 25 feet of building entries, outdoor air intakes and operable windows where outdoor areas are provided for smoking and in buildings; or as enforced by ordinances, regulations or policies of any city, county, city and county. California Community College, campus of the California State University or campus of the University of California, whichever are more stringent.	☐		
Indoor Moisture and Radon Control			
5.505.1 Indoor moisture control. Buildings shall meet or exceed the provisions of *California Building Code,* CCR, Title 24, Part 2, Sections 1203 and Chapter 14.1.[1]	☒		
Air Quality and Exhaust			
5.506.1 Outside air delivery. For mechanically or naturally ventilated spaces in buildings, meet the minimum requirements of Section 121 of the *California Energy Code,* CCR, Title 24, Part 6 and Chapter 4 of CCR, Title 8 or the applicable local code, whichever is more stringent. [1]	☒		
5.506.2 Carbon dioxide (CO_2) monitoring. For buildings equipped with demand control ventilation, CO2 sensors and ventilation controls shall be specified and installed in accordance with the requirements of the latest edition of the *California Energy Code,* CCR, Title 24, Part 6, Section 121 (c).[1]	☒		
Environmental Comfort			
A5.507.1 Lighting and thermal comfort controls. Provide controls in the workplace as described in Sections A5.507.1.1 and A5.507. 1.2. **A5.507.1.1 Single-occupant spaces.** Provide individual controls that meet energy use requirements in the 2007 *California Energy Code* by Sections A5.507.1.1.1 and A5.507.1.1.2. **A5.507.1.1.1 Lighting.** Provide individual task lighting and/or daylighting controls for at least 90 percent of the building occupants. **A5.507.1.1.2 Thermal comfort.** Provide individual thermal comfort controls for at least 50 percent of the building occupants by Items 1 and 2 in Section A5.507. 1.1.2. **A5.507.1.2 Multi-occupant spaces.** Provide lighting and thermal comfort system controls for all shared multi-occupant spaces.		☐ ☐ ☐ ☐	☐ ☐ ☐ ☐
A5.507.2 Daylight. Provide daylit spaces as required for toplighting and sidelighting in the 2007 *California Energy Code.* In constructing a design, consider Items 1 through 4 in Section A5.507.3.		☐	☐
A5.507.3 Views. Achieve direct line of sight to the outdoor environment via vision glazing between 2'6" and 7'6" above finish floor for building occupants in 90 percent of all regularly occupied areas. **A5.507.3.1 Interior office spaces.** Entire areas of interior office spaces may		☐ ☐	☐ ☐

APPLICATION CHECKLIST FOR BSC	Mandatory	VOLUNTARY	
		Tier 1	Tier 2
be included in the calculation if at least 75 percent of each area has direct line of sight to perimeter vision glazing. **A5.507.3.2 Multi-occupant spaces.** Include in the calculation the square footage with direct line of sight to perimeter vision glazing		☐	☐
5.507.4 Acoustical control. Employ building assemblies and components with STC values determined in accordance with ASTM E 90 and ASTM E 413.	☐		
5.507.4.1 Exterior noise transmission. Wall and floor-ceiling assemblies making up the building envelope shall have an STC of at least 50 and exterior windows shall have a minimum STC of 30 for any of the building locations listed in Items 1 through 3 in Section 5.507.5.1.	☐		
5.507.4.2 Interior sound. Wall and floor-ceiling assemblies separating tenant spaces and tenant spaces and public places shall have an STC of at least 40.	☐		
Outdoor Air Quality			
5.505.1 Ozone depletion and global warming reductions. Installations of HVAC, refrigeration and fire suppression equipment shall comply with Sections 5.508.1.1 and 5.508.1 .2.	As applicable		
5.505.1.1 CFCs. Install HVAC and refrigeration equipment that does not contain CFCs.[1]	☒		
5.505.1.2 Halons. Install fire suppression equipment that does not contain Halons.[1]	☒		
A5.505.1.3 Hydrochlorofluorocarbons (HCFCs). Install HVAC and refrigeration equipment that does not contain HCFCs.		☐	☐
A5.505.1.4 Hydrofluorocarbons (HFCs). Install HVAC complying with either of the following:			
1. Install HVAC, refrigeration and fire suppression equipment that do not contain HFCs or that do not contain HFCs with a global warming potential greater than 150.		☐	☐
2. Install HVAC and refrigeration equipment that limit the use of HFC refrigerant through the use of a secondary heat transfer fluid with a global warming potential no greater than 1.		☐	☐

1. These measures are currently required elsewhere in statute of in regulation.
2. Required prerequisite for this Tier.

BH1. City of Beverly Hills code amendment.

BH2. City of Beverly Hills amended this section as part of the mandatory minimum code requirements.

Section 11. A new Article 12 "California Energy Code" is hereby added to Chapter 1 of Title 9 of the Beverly Hills Municipal Code to read as follows:

"Article 12. California Energy Code

9-1-1201: ADOPTION OF CALIFORNIA ENERGY CODE: The 2010 Edition of the California Energy Code is hereby adopted by reference, and the same shall be known and cited as the Energy Code of the City of Beverly Hills."

Section 12. A new Article 13 "California Historical Building Code" is hereby added to Chapter 1 of Title 9 of the Beverly Hills Municipal Code to read as follows:

"Article 13. California Historical Building Code

9-1-1301: ADOPTION OF CALIFORNIA HISTORICAL BUILDING CODE: The 2010 Edition of the California Historical Building Code is hereby adopted by reference, and the same shall be known and cited as the Historical Building Code of the City of Beverly Hills."

Section 13. A new Article 14 "California Existing Building Code" is hereby added to Chapter 1 of Title 9 of the Beverly Hills Municipal Code to read as follows:

"Article 14. California Existing Building Code

9-1-1401: ADOPTION OF CALIFORNIA EXISTING BUILDING CODE: The 2010 Edition of the California Existing Building Code is hereby adopted by reference, and the same shall be known and cited as the Existing Building Code of the City of Beverly Hills."

Section 14. A new Article 15 "California Reference Standards Code" is hereby added to Chapter 1 of Title 9 of the Beverly Hills Municipal Code to read as follows:

"Article 15. California Reference Standards Code

9-1-1501: ADOPTION OF CALIFORNIA REFERENCE STANDARDS CODE: The 2010 Edition of the California Reference Standards Code is hereby adopted by reference, and the same shall be known and cited as the Reference Standards Code of the City of Beverly Hills."

Section 15. A new Article 16 "International Property Maintenance Code" is hereby added to Chapter 1 of Title 9 of the Beverly Hills Municipal Code to read as follows:

"Article 16. International Property Maintenance Code

9-1-1601: ADOPTION OF INTERNATIONAL PROPERTY MAINTENANCE CODE: The 2009 Edition of the International Property Maintenance Code is hereby adopted by reference, subject to the amendments set forth in Section 9-1-1602 of this Article, and the same shall be known and cited as the Property Maintenance Code of the City of Beverly Hills.

9-1-1602: AMENDMENTS TO INTERNATIONAL PROPERTY MAINTENANCE CODE:

The International Property Maintenance Code adopted pursuant to Section 9-1-1601 is hereby amended as follows:

"Section 101.1 of the International Property Maintenance Code is amended to read as follows:

101.1 Title. These regulations shall be known as the International Property Maintenance Code of the City of Beverly Hills, hereinafter referred to as 'this code'."

"Section 102.3 of the International Property Maintenance Code is amended to read as follows:

102.3 Application of other codes. Repairs, additions or alterations to a structure, or changes of occupancy, shall be done in accordance with the procedure and provisions of the California Building Code, California Mechanical Code and NFPA 70. Nothing in this code shall be construed to cancel, modify or set aside any provision of the Beverly Hills Municipal Code."

"Section 102.7 of the International Property Maintenance Code is amended to read as follows:

102.7 Referenced codes and standards. The codes and standards reference in this code shall be those that are listed in Chapter 8 and the California Health and Safety Code-Title 24 and considered part of the requirements of this code to the prescribed extent of each such reference. Where differences occur between provisions of this code and the referenced standards, the provisions of this code shall apply.

Exception: Where enforcement of a code provision would violate the conditions of the listing of the equipment or appliance, the conditions of the listing shall apply."

"Section 103.5 of the International Property Maintenance Code is amended to read as follows:

103.5 Fees. The fees for activities and services performed by the department in carrying out its responsibilities under this code shall be as indicated by the Beverly Hills Municipal Code and the adopted Schedule of Taxes, Fees and Charges."

"Section 702 of the International Property Maintenance Code is amended to read as follows:

[F] SECTION 702
MEANS OF EGRESS

702.1 General. A safe, continuous and unobstructed path of travel shall be provided from any point in a building or structure to the public way. Means of egress shall comply with the California Fire Code.

702.2 Aisles. The required width of aisles in accordance with the California Fire Code shall be unobstructed.

702.3 Locked doors. All means of egress doors shall be readily openable from the side from which egress is to be made without the need for keys, special knowledge or effort, except where the door hardware conforms to that permitted by the California Building Code.

702.4 Emergency escape openings. Required emergency escape openings shall be maintained in accordance with the code in effect at the time of construction, and the following. Required emergency escape and rescue openings shall be operational from the inside of the room without the use of keys or tools. Bars, grilles, grates or similar devices are NOT permitted to be placed over emergency escape and rescue openings."

"Section 704 of the International Property Maintenance Code is amended to read as follows:

[F] SECTION 704
FIRE PROTECTION SYSTEMS

704.1 General. All systems, devices and equipment to detect a fire, actuate an alarm, or suppress or control a fire or any combination thereof shall be maintained in an operable condition at all times in accordance with the California Fire Code

704.1.1 Automatic sprinkler systems. Inspection, testing and maintenance of automatic sprinkler systems shall be in accordance with NFPA 25.

704.2 Smoke alarms. Single- or multiple-station smoke alarms shall be installed and maintained in Groups R -2, R -3, R- 4 and in dwellings not regulated in Group R occupancies, regardless of occupant load at all of the following locations:

1. On the ceiling or wall outside of each separate sleeping area in the immediate vicinity of bedrooms.
2. In each room used for sleeping purposes.
3. In each story within a dwelling unit, including basements and cellars but not including crawl spaces and uninhabitable attics. In dwellings or dwelling units with split levels and without an intervening door between the adjacent levels, a smoke alarm installed on the upper level shall suffice for the adjacent lower level provided that the lower level is less than one full story below the upper level. Single- or multiple-station smoke alarms shall be installed in other groups in accordance with the California Fire Code.

704.3 Power source. In Group R occupancies and in dwellings not regulated as Group R occupancies, single-station smoke alarms shall receive their primary power from the building wiring provided that such wiring is served from a commercial source and shall be equipped with a battery backup. Smoke alarms shall emit a signal when the batteries are low. Wiring shall be permanent and without a disconnecting switch other than as required for overcurrent protection.

Exception: Smoke alarms are permitted to be solely battery operated in buildings where no construction is taking place, buildings that are not served from a commercial power.

704.4 Interconnection. Where more than one smoke alarm is required to be installed within an individual dwelling unit in Group R -2, R -3, R -4 and in dwellings not regulated as Group R occupancies, the smoke alarms shall be interconnected in such a manner that the activation of one alarm will activate all of the alarms in the individual unit. The alarm shall be clearly audible in all bedrooms over background noise levels with all intervening doors closed.

Exceptions:

1. Interconnection is not required in buildings which are not undergoing alterations, repairs or construction of any kind.
2. Smoke alarms in existing areas are not required to be interconnected where alterations or repairs do not result in the removal of interior wall or ceiling finishes exposing the structure, unless there is an attic, crawl space or basement available which could provide access for interconnection without the removal of interior finishes."

Section 16. A new Article 17 "Beverly Hills Solar Photovoltaic Installation Guidelines" is hereby added to Chapter 1 of Title 9 of the Beverly Hills Municipal Code to read as follows:

"Article 17. Beverly Hills Solar Photovoltaic Installation Guidelines

9-1-1701: ADOPTION OF BEVERLY HILLS SOLAR PHOTOVOLTAIC INSTALLATION GUIDELINES: The 2010 Edition of the Beverly Hills Solar Photovoltaic Installation Guidelines as established by the City of Beverly Hills is hereby adopted and made a part of this Chapter and Title, and the same may be known and cited as the Solar Photovoltaic Installation Guidelines of the City of Beverly Hills. A full, true and correct copy of the Guidelines are available for review in the office of the Building Official."

Section 17. Sections 9-2-1 and 9-2-2 of Article 1 of Chapter 2 of Title 9 of the Beverly Hills Municipal Code are hereby repealed, provided, however, that such repeal shall not affect or excuse any violation of said Sections occurring prior to the effective date of this ordinance. New Sections 9-2-1 and 9-2-2 are hereby added to Article 1 of Chapter 2 of Title 9 of the Beverly Hills Municipal Code as follows:

9-2-I ADOPTION OF CALIFORNIA FIRE CODE: The 2010 edition of the California Fire Code including the appendices is hereby adopted by reference, subject to the amendments set forth in Section 9-2-2, and the same shall be known and may be cited as the Fire Code of the City of Beverly Hills.

9-2-2 AMENDMENTS TO FIRE CODE: The Fire Code adopted pursuant to Section 9-2-I is hereby amended as follows:

"Appendix B, BB, C, CC, D and H of the California Fire code is adopted without amendments."

"Section 104.3 of the California Fire Code is adopted without modification as published, to read as follows:.

104.3 Right of entry. Whenever it is necessary to make an inspection to enforce the provisions of this code, or whenever the *fire code official* has reasonable cause to believe that there exists in a building or upon any premises any conditions or violations of this code which make the building or premises unsafe, dangerous or hazardous, the *fire code official* shall have the authority to enter the building or premises at all reasonable times to inspect or to perform the duties imposed upon the *fire code official* by this code. If such building or premises is occupied, the *fire code official* shall present credentials to the occupant and request entry. If such building or premises is unoccupied, the *fire code official* shall first make a reasonable effort to locate the *owner* or other *person* having charge or control of the building or premises and request entry. If entry is refused, the *fire code official* has recourse to every remedy provided by law to secure entry.

104.3.1 Warrant. When the *fire code official* has first obtained a proper inspection warrant or other remedy provided by law to secure entry, an *owner* or occupant or *person* having charge, care or

control of the building or premises shall not fail or neglect, after proper request is made as herein provided, to permit entry therein by the *fire code official* for the purpose of inspection and examination pursuant to this code."

"Section 104.12 is added to the California Fire Code to read as follows:

104.12 Fire prevention bureau personnel and police. The chief and members of the fire prevention bureau shall each have the powers of a police officer in performing their duties under this code as follows:

1. Members of the fire department may act as peace officers only as permitted by section 830.37 of the California Penal Code. All members of the fire department with the rank of captain or above and all members of the fire prevention bureau who are peace officers as defined in section 830.37 of the Penal Code and members who have been designated by the fire chief as arson investigators and who have satisfactorily completed the courses of training required by section 832 of the Penal Code are designated as peace officers for the purposes of section 171c, 171d, 12027 and 12031 of the Penal Code while engaged as members of an arson investigating unit, regularly employed and paid as such, in the detection and apprehension of persons who have violated or who are suspected of having violated any fire law, or while exclusively engaged in the enforcement of law as relating to fire prevention and fire suppression.

2. When requested to do so by the chief, the chief of police is authorized to assign such available police officers as necessary to assist the fire department in enforcing the provisions of this code."

"Section 106.1 of the California Fire Code is adopted without modification to read as published.

106.1 Inspection authority. *The fire code official* is authorized to enter and examine any building, structure, marine vessel, vehicle or premises in accordance with Section 104.3 for the purpose of enforcing this code."

"Sub-section 106.2.3 is added to the California Fire Code to read as follows:

106.2.3 Annual inspection. All properties located in the Very High Fire Hazard Severity Zone as identified by the Beverly Hills High Fire Severity Zone shall be inspected annually for compliance with state and local brush clearance requirements by the Fire Official.

All B,M, Multi-Family occupancies and other occupancies as determined by the Fire Code official, shall be inspected at least once in a 2 year period but not more than once a year for state and local fire life safety requirements by the Fire Code Official. Certain occupancies, as determined by the Fire Code Official, shall be inspected annually.

Exception: Compliance Verification Inspections frequency to be determined by the Fire Official as needed."

"Section 109.3.2 is added to the California Fire Code to read as follows:

109.3.2 Citations. Persons operating or maintaining an occupancy, premises or vehicle or performing work which requires a permit by this code, who allow a hazard to exist or fail to take immediate action to abate a hazard on such occupancy, premises or vehicle or who fail to obtain a permit prior to start of work which requires such a permit under this code, when ordered or notified to do so by the chief, shall be guilty of a misdemeanor."

"Section 110.1.3 is added to the California Fire Code to read as follows:

110.1.3 Warning signs. Whenever the chief shall determine that warning signs are required in the protection of persons or property from injury due to unauthorized entry into dangerous structures or buildings, he shall order such buildings or structures adequately posted with signs reading, "WARNING

UNSAFE DO NOT ENTER BY ORDER OF THE BEVERLY HILLS FIRE DEPARTMENT."

It shall be unlawful for any person to enter or remain within any such posted structures or building, except that public officers acting in the course of duty, and representatives of public or private utilities, shall be exempt from the provisions of this section."

"Section 113.1 of the California Fire Code is amended to read as follows:

113.1 Fees. A permit, required by this chapter, shall not be issued until the fees have been paid to the City, nor shall an amendment to a permit be released until the additional fee, if any, has been paid."

"Section 113.5 of the California Fire Code is amended to read as follows:

113.5 Refunds. The applicable governing body authority is authorized to establish a refund policy. The refund policy shall be as is established by Section 304.6 of the 1997 Uniform Administrative Code as amended by the City of Beverly Hills."

"Section 305 of the California Fire Code is adopted."

"Section 307, excluding subsection 307.2 of the California Fire Code is adopted."
"Section 307.1.1 of the California Fire Code is amended to read as follows:
307.1.1 Prohibited open burning. Open Flame, open burning, or recreational burning that is offensive or objectionable because of smoke emissions or when atmospheric conditions, local circumstances, or in Very-High Fire Hazard Severity Zones make such fires hazardous shall be prohibited"

"Section 308, excluding subsection 308.2 of the California Fire Code is adopted."

"Section 308.1.4 of the California Fire Code is adopted and amended to read as follows:

308.1.4 Open-flame cooking devices. Charcoal burners and other open-flame cooking devices shall not be operated on combustible balconies or within 10 feet (3048 mm) of combustible construction.

Exceptions:
1. One- and two-family dwellings.
2. Where buildings, balconies and decks are protected by an automatic sprinkler system.
3. LP-gas cooking devices having LP-gas container with a water capacity not greater than 2 ½ pounds [nominal 1 pound (0.454 kg) LP-gas capacity]."

"Section 308.1.6.3 is added to the California Fire Code to read as follows:

308.1.6.3 Open flame gas fired decorative torches. Open flame decorative appliances shall comply with the following requirements:

308.1.6.3.1 Approvals and permits.
1. Applicant shall first apply to the Beverly Hills Community Development Department, Building and Safety for a permit application, and submit two (2) sets of scale drawings, showing building, property line and public ways. Location of remote shutoff valves should also to be shown.
2. Applicant shall submit one (1) copy of plans to the Fire Department for approval. The torch location, piping, shut offs and clearances shall be shown.
3. If the torch body or flame extends over a public street or sidewalk, applicant shall submit plans for approval to the Community Development Department, Building and Safety.
4. Any electrical wiring shall be installed under electrical permit obtained from Community Development Department, Building and Safety division.

308.1.6.3.2 Installation.

1. All torch burner heads shall be approved by the Fire Department or shall be listed by an approved testing laboratory or agency. Torch burner heads shall be installed a minimum of eight feet from the ground level.
2. A radius of ten feet shall be maintained between the torch burner and combustible materials, including all vegetation.
3. Torch flames shall not exceed 24" inches in length, except by special approval of the Fire Department. Every burner shall be equipped with an approved automatic pilot light and manually controlled shutoff valve located in the main gas supply line.
4. An approved shutoff valve shall be located at or near the base of the torch, and a labeled secondary shutoff valve shall be located at an easily accessible remote location.
5. Minimum pipe size of torch standard shall be 1 inch. If length of torch standard exceeds 8 feet, pipe size shall be not less than 1 1/2 inches.
6. If torch is exposed to mechanical damage or vehicular traffic, adequate protection shall be provided. Torch standards mounted on the ground shall be imbedded 12 inches into a 15 inch cube of concrete or such other standards that will resist equal force."

"Section 310 of the California Fire Code is adopted."

"Section 311 of the California Fire Code is adopted."

"Section 504.1 of the California Fire Code is amended to read as follows:

504.1 Required access. Exterior doors and openings required by this code or the *International Building Code* shall be maintained readily accessible for emergency access by the fire department. An *approved* access walkway leading from fire apparatus access roads to exterior openings shall be provided when required by the *fire code official.* Required access shall have locks with exterior key access. Keys for required access shall be made readily available with a Fire Department Knox box.

[California Code of Regulations, Title 19, Division 1,§3.05(b)] Fire Department Access and Egress. (Roofs)

(b) Roofs. No person shall install or maintain any security barrier such as barbed wire fencing, razor wire fencing, chain link fencing or any other fencing material, cable, aerial, antenna or other obstruction on the roof of any commercial establishment in such a manner as to obstruct or render egress or access hazardous in the event of fire or other emergency.

Exception: Guy wire, rods and aerial antenna masts may be attached to a roof structure having a slope of less than 30 degrees provided there is full clearance of seven feet or more between the roof and said obstruction. Guy wire or rods required to support aerial or antenna masts may be attached to a roof structure a lateral distance from the mast not in excess of one-sixth the height of the mast."

"Section 505.1 of the California Fire Code is amended to read as follows:

505.1 Address identification. New and existing buildings shall have approved address numbers or approved building identification placed in a position that plainly legible and visible from the street or road fronting the property. These numbers shall be Arabic numbers or alphabetical letters. Numbers shall be a minimum of 4 inches high for residential properties and a minimum of 6 inches for non residential properties, with a minimum stroke width of 0.5 inches. Where access is by means of a private road and the building cannot be viewed from the public way, a monument, pole, or other sign or means shall be used to identify the structure.

Residential structures which have access from a rear alley, in addition to the numbering required by this section, shall for purposes of emergency response, provide numbering and street identification which is clearly visible from the rear alley access in accordance with the following provisions:

(1) The name of the street and street number as designated by the city building official shall be visible from the alley and located adjacent to the alley access to the structure.

(2) The address markings shall be placed five (5') feet above the alley surface, with numbers four (4") inches in height and letters two (2") inches in height, and placed upon the structure, wall, fence, gate, or other appropriate surface so as to be clearly visible.
(3) If any property owner shall fail to provide the address identification required by this subsection on the premises, the city may provide and affix such address identification markings at no cost to the property owner. Where identification markings are provided by the city, no person shall remove, deface, or modify such markings without the written authorization of the city building official."

"Section 506.1 of the California Fire Code is amended to read as follows:

506.1 Where required. Where access to or within a structure or an area is restricted because of secured openings or where immediate access is necessary for life-saving or fire-fighting purposes, the *fire code official* is authorized to require a key box to be installed no more than 6 feet in height from finished grade in an *approved* location. The key box shall be of an *approved* type and shall contain keys to gain necessary access as required by the *fire code official.*"

"Section 506.1.2 is added to the California Fire Code to read as follows:

506.1.2 Key switches. An approved key switch or pad lock shall be installed on motorized or lockable gates, perimeter fencing or similar barricades that obstruct access to a property when required by the fire code official."

"Subsection 901.2.2 is added to the California Fire Code to read as follows:

901.2.2 Hydraulic water calculations. All fire sprinkler systems shall be designed with a 10% safety factor for hydraulic water calculations."

"Section 903.1.1.1 of the California Fire Code is deleted."

"Section 903.2 of the California Fire Code is amended to read as follows:

903.2 Where required.

A. Approved automatic sprinkler systems in new buildings and structures shall be required for all occupancies, except U occupancies which are sheds that are less than five hundred (500) square feet.

B. Approved automatic sprinkler systems shall be required in all existing buildings if: (i) additions, alterations or repairs are made within any twelve (12) month period which exceed fifty percent (50%) of the value of such existing building, (ii) an addition is constructed which exceeds fifty percent (50%) of the square footage of the existing building, or (iii) an addition of more than five thousand (5,000) square feet is constructed.
C. Areas occupied by the following existing occupancies shall have installed an automatic fire-extinguishing system in compliance with this code:

(1). Throughout all existing eating establishments having a floor area in excess of three thousand (3,000) square feet.
(2). Throughout bowling alleys.
(3). Throughout public assembly occupancies having an occupant load of three hundred (300) or more persons. If such occupancies are located above the first floor, the floors below shall be provided with an automatic sprinkler system; provided further, public assembly occupancies of three hundred (300) or more persons placed in buildings existing prior to August 19, 1976, shall not be required to provide an automatic fire-extinguishing system in floors below such occupancy.
(4). Throughout hotels except those areas used exclusively for lodging.
(5). Throughout retail sales rooms classified as group M and S occupancies if the floor area of all floors exceeds twelve thousand (12,000) square feet, and in group M and S retail sales and storage occupancies more than three (3) stories in height, and in group M and S occupancies, if

such occupancies are located within the same building or structure as group R-I occupancies. The area of mezzanines shall be included in determining the areas where sprinklers are required.

(6). Nightclubs and discos in rooms primarily used for entertaining occupants who are drinking or dining and unseparated accessory uses where the total area of such unseparated rooms and assembly uses exceeds three thousand (3,000) square feet. For uses to be considered "separated," the separation shall be not less than is required for a one-hour occupancy separation.

(7). In every story or basement of all buildings if the floor area exceeds fifteen hundred (1,500) square feet and there is not provided at least twenty (20) square feet of opening entirely above the adjoining ground level in each 50 linear feet or fraction thereof of exterior wall in the story or basement on at least one side of the building. Openings shall have a minimum dimension of not less than thirty (30) inches. Such openings shall be accessible to the fire department from the exterior and shall not be obstructed in a manner that fire fighting or rescue cannot be accomplished from the exterior.

When openings in a story are provided on only one side and the opposite wall of such story is more than seventy-five (75) feet from such openings, the story shall be provided with an approved automatic sprinkler system, or openings as specified above shall be provided on at least two sides of an exterior wall of the story.

(8). In rooms where nitrate film is stored and handled.

(9). In protected combustible fiber storage vaults as defined in the fire code.

D. Approved automatic sprinkler systems shall be required for new Ambulatory Health Care Facilities (as that term is defined herein) located in an existing building or portion thereof, and that are classified as a Business Group B or Institutional Group I-2.1 occupancy."

"Section 903.2.1 through 903.2.10 of the California Fire Code (and the subsections therein) are hereby deleted in their entirety."

"Section 903.2.11 of the California Fire Code is amended to read as follows:

903.2.11 Specific building areas and hazards. In all occupancies an *automatic sprinkler* system shall be installed for building design or hazards in the location set forth in Section 903.2.11.1 through 903.2.11.11."

"Section 903.2.11.2 of the California Fire Code is amended to read as follows:

903.2.11.2 Rubbish and linen chutes. An *automatic sprinkler system* shall be installed at the top of rubbish and linen chutes and in their termination rooms. Chutes extending through two or more floors shall have additional sprinkler heads installed within such chutes at alternate floors. Chute sprinklers shall be accessible for servicing."

"Section 903.2.11.7 is added to the California Fire Code to read as follows:

903.2.11.7 Elevator pits. Approved automatic sprinklers shall be provided in new elevator pits."

"Section 903.2.11.8 is added to the California Fire Code to read as follows:

903.2.11.8 Storage and use of nitrate film. An automatic sprinkler system shall be provided throughout all new rooms where nitrate film is stored and handled."

"Section 903.2.11.9 is added to the California Fire Code to read as follows:

903.2.11.9 Fiber storage vaults. An automatic sprinkler system shall be provided in new combustible fiber storage vaults as defined in the fire code."

"Section 903.2.11.10 is added to the California Fire Code to read as follows:

903.2.11.10 Bowling alleys. An automatic sprinkler system shall be provided throughout all new bowling alleys."

"Section 903.2.11.11 is added to the California Fire Code to read as follows:

903.2.11.11 Balconies and decks. Sprinkler protection shall be provided for exterior overhangs, balconies, decks, and ground floor patios of dwelling units exceeding four (4) feet in width."

"Section 903.3.1.2 of the California Fire Code is deleted."

"Section 903.3.1.3.1 is added to the California Fire Code to read as follows:

903.3.1.3.1 Double check valve. Two check valves are required to be installed at each fire sprinkler riser in NFPA 13D systems and an approved backflow assembly (DCDA, DCVA, or RPZ) for NFPA 13 systems."

"Section 903.3.1.3.2 is added to the California Fire Code to read as follows:

903.3.1.3.2 Fire sprinkler riser assemblies. Where fire sprinklers are required, each separate structure shall have fire sprinkler riser assembly with a main control valve, separate domestic valves, identification signage, and exterior horn strobes."

"Section 903.3.5.1.1 of the California Fire Code is amended to read as follows:

903.3.5.1.1 Limited area sprinkler systems. Limited area sprinkler systems serving fewer than 20 sprinklers on any single connection are permitted to be connected to the domestic service where a wet automatic standpipe is not available. Limited area sprinkler systems connected to domestic water supplies shall comply with each of the following requirements:

1. Valves shall not be installed between the domestic water riser control valve and the sprinklers.
   Exception: An *approved* indicating control valve supervised in the open position in accordance with Section 903.4.
2. The domestic service shall be capable of supplying the simultaneous domestic demand and the sprinkler demand required to be hydraulically calculated by NFPA 13, or NFPA 13D."

"Section 903.3.5.1.2 of the California Fire Code is amended to read as follows:

903.3.5.1.2 Residential combination services. A single combination water supply shall be allowed provided that the domestic demand is added to the sprinkler demand as required by NFPA."

"Section 903.3.7 of the California Fire Code is amended to read as follows:

903.3.7 Fire department connections. The location and size of fire department connection shall be *approved* by the *fire code official*."

"Section 903.4 of the California Fire Code is amended to read as follows:

Section 903.4 Sprinkler system monitoring and alarms. All valves controlling the water supply for automatic sprinkler systems, pumps, tanks, water levels and temperatures, critical air pressures, and water-flow switches on all sprinkler systems shall have all valves locked in the open position as required

by the Fire Official and be electrically supervised by a *listed* fire alarm control unit. Where the combination of new and existing sprinkler systems totaling 20 sprinkler heads or more on one property are being modified or altered, the entire sprinkler system shall be electrically monitored offsite by a supervising station.

Exceptions:

New and existing sprinkler systems with a combined total of 19 heads or less on one property."

"Section 903.4.2 of the California Fire Code is amended to read as follows:

903.4.2 Alarms. *Interior and exterior* approved audible and visual devices shall be connected to every automatic sprinkler system *in an approved location.* Such sprinkler water-flow alarm devices shall be activated by water flow equivalent to the flow of a single sprinkler of the smallest orifice size installed in the system. Where a *building* fire alarm system is installed, actuation of the automatic sprinkler system shall actuate the building fire alarm system. Approved alarm notification appliances shall be provided."

"Section 905.11 of the California Fire Code is added to read as follows:

905.11 Existing buildings. Existing structures with occupied floors located 3 or more stories above or below the lowest level of fire department access shall be equipped with standpipes installed in accordance with section 905. The standpipes shall have an approved fire department connection with hose connections at each floor level above or below the lowest level of fire department access. The fire code official is authorized to approve the installation of manual standpipe systems to achieve compliance with this section where the responding fire department is capable of providing the required hose flow at the highest standpipe outlet."

"Section 907.2.11.3 of the California Fire Code is amended to read as follows:

907.2.11.3 Interconnection. Where more than one smoke alarm is required to be installed within an individual dwelling unit in Group R-2, R-3, *R-3.1,* or R-4, or within an individual dwelling unit or sleeping unit in Group R-1, the smoke alarms shall be interconnected in such a manner that the activation of one alarm will activate all of the alarms in the individual unit. The alarm shall be clearly audible in all bedrooms over background noise levels with all intervening doors closed. When low-voltage systems are required, the fire official may require additional sounder bases installed. Low voltage systems shall be installed per NFPA 72 fire alarm system requirements."

"Section 907.6.2.3.5 is added to the California Fire Code to read as follows:

907.6.2.3.5 All use areas. Visible alarm notification appliances shall be provided in all occupied rooms where ambient **noise** impairs hearing of the fire alarm including but not limited to residential home theaters."

"Section 1006.3 of the California Fire Code is amended to read as follows:

1006.3 Illumination emergency power. The power supply for means of egress illumination shall normally be provided by the premises' electrical supply.

In the event of power supply failure, an emergency electrical system shall automatically illuminate the following areas.

1. Aisles and unenclosed egress stairways in rooms and spaces that require two or more means of egress.
2. Corridors, exit enclosures and exit passageways in buildings required to have two or more exits.
3. Exterior egress components at other than the level of exit discharge until exit discharge is accomplished for buildings required to have two or more exits.
4. Interior exit discharge elements, as permitted in Section 1027.1, in building required to have two or more exits.

5. Exterior landings, as required by Section 1008.1.6, for exit discharge doorways in buildings required to have two or more exits.
6. Parking Garages.
   Exception: Parking Garages for Single Family Residences.

The emergency power system shall provide power for duration of not less than 90 minutes and shall consist of storage batteries, unit equipment or an on-site generator. The installation of the emergency power system shall be in accordance with Chapter 27 of the *California Building Code*."

"Section 1008.1.4.6 of the California Fire Code is amended to read as follows:

1008.1.4.6 Access-controlled elevator lobby egress doors. *When approved by the fire official, the entrance doors within an elevator lobby in a means of egress of midrise and highrise buildings serving offices that are equipped throughout with an automatic sprinkler system in accordance with Section 903.3.1.1 and an approved automatic smoke detection system installed in accordance with Section 907, are permitted to be equipped with an approved entrance and egress access control system which shall be installed in accordance with all of the following criteria:*

1. *Locks for the elevator lobby shall be UL and California State Fire Marshal listed fail-safe type locking mechanisms. The locking device shall automatically release on activation of any fire alarm device on the floor of alarm (waterflow, smoke detector, manual pull station, etc.) All locking devices shall unlock, but not unlatch, upon activation.*
2. *A two-way voice communication system, utilizing dedicated lines, shall be provided from each locked elevator lobby to the 24-hour staffed location on site, annunciated as to location. Operating instructions shall be posted above each two-way communication device.*
3. *Provide an approved momentary mushroom shaped palm button connected to the doors and installed adjacent to each locked elevator lobby exit door which will release the door locks when operated by an individual in the elevator lobby. The locks shall be reset manually at the door. Mount palm button so that center line is 48 inches (1219 mm) above finish door.*
   Provide a sign stating:

IN CASE OF EMERGENCY, PUSH PALM
BUTTON. DOOR WILL UNLOCK AND
SECURITY ALARM WILL SOUND.

   The sign lettering shall be 3/4-inch (19.1 mm) high letters by 1/8-inch (3.2 mm) width stroke on a contrasting background.
4. *Loss of power to that part of the access control system which locks the doors shall automatically unlock the doors.*"

"Section 1022.8 of the California Fire Code is amended to read as follows:

1022.8 Floor identification signs. A sign shall be provided at each floor landing in exit enclosures connecting more than two stories designating the floor level, the terminus of the top and bottom of the exit enclosure and the identification of the stair or ramp. The signage shall also state the story of, and the direction to, the exit discharge and the availability of roof access from the enclosure for the fire department. The sign shall be located 5 feet (1524 mm) above the floor landing in a position that is readily visible when the doors are in the open and closed positions. Signs shall be installed on the interior of the stairways on each floor and on the exterior door of each stair door at the ground level, to identify each stair landing and indicate the upper and lower termination of the stairway. Floor level identifications and markings shall remain consistent throughout the entire property or building including, but not limited to lobbies, hallways, parking levels, and basement levels.

Tactile floor identification signs that comply with 1117B.5.1Item 1 shall be located at the landing of each floor level, placed adjacent to the door on the latch side, in all enclosed stairways in buildings two or more stories in height to identify the floor level. At the exit discharge level, the sign shall include a raised five pointed star located to the left of the identifying floor level. The outside diameter of the star shall be the same as the height of the raised characters."

"Section 1022.8.1 of the California Fire Code is amended to read as follows:

1022.8.1 Signage requirements. *Stairway* identification signs shall comply with all of the following requirements:

1. The signs shall be a minimum size of 18 inches (457 mm) by 12 inches (305 mm).
2. The letters designating the identification of the stair enclosure, *such as STAIR NO.* 1 *or WEST STAIR, shall be placed at the top of the sign and* shall be a minimum of 1-1/2 inches (38 mm) in height *block lettering with 1/4 inch* (6 *mm) strokes.*
3. The number designating the floor level shall be a minimum of 5 inches (127 mm) in height *with 3/4-inch* (19 *mm) strokes* and located in the center of the sign. *The mezzanine levels shall have the letter "M" preceding the floor level. Basement levels shall have the letter "B" preceding the floor number.*
4. All other lettering and numbers shall be a minimum of 1 inch (25 mm) in height.
5. *The stairway's upper terminus, such as ROOF ACCESS or NO ROOF ACCESS, shall be placed under the stairway identification in 1-inch-high (25 mm) block lettering with 1/4-inch* (6 *mm) strokes.*
6. *The lower and upper terminus of the stairway shall be placed at the bottom of the sign in 1-inch-high (25mm) block lettering with 1/4 inch* (6 *mm) strokes.*
7. Characters and their background shall have a nonglare finish. Characters shall contrast with their background, with either light characters on a dark background or dark characters on a light background.
8. When signs required by Section 1022.8 are installed in interior exit enclosures of buildings subject to Section 1024, the signs shall be made of the same materials as required by Section 1024.4.
9. Signs shall also be installed on the exterior of all ground level stairway doors.

"Section 1030.9 is added to the California Fire Code to read as follows:

1030.9 Existing unsafe means of egress. The Building Official or Fire Official may require unsafe means of egress requirements to comply with Section 1008, when the minimum number of exists are not readily available or are restricted during an emergency."

"Section 1030.10 is added to the California Fire Code to read as follows:

1030.10 Fire escape maintenance. Fire escapes shall be kept clear and unobstructed at all times and shall be maintained in a good working order."

"Section 2403.2 of the California Fire Code is amended to read as follows:

2403.2 Approval required. Tents and membrane structures having an area in excess of forty (40) square feet and canopies in excess of forty (40) square feet shall not be erected, operated or maintained for any purpose without first obtaining a permit and approval from the fire code official."

"Section 2403.5 of the California Fire Code is amended to read as follows:

2403.5 Use period. Unless otherwise authorized by the city building official, no tent, awning, canopy or temporary membrane structure in excess of forty (40) square feet shall be erected or maintained on private property within the city in excess of ten (10) days."

"Section 2403.6 of the California Fire Code is amended to read as follows:

2406.3 Construction documents. A detailed site and floor plan for tents or membrane structure 40 square feet or more shall be provided with each application for approval. Applications for approval shall be provided to the reviewing authority 10 days before the tent or membrane structure is to be erected. The tent or membrane structure floor plan shall indicate details of means of egress facilities, seating capacity, arrangement of the seating and location and type of heating and electrical equipment."

"Section 3301.2 is added to the California Fire Code to read as follows:

3301.2 Fireworks prohibited. No person shall manufacture, store, offer for sale or discharge any fireworks in the city; provided further, fireworks may be discharged in conjunction with a city sponsored event."

"Section 4904.3 is added to the California Fire Code to read as follows:

4704.3 Very High Fire Hazard Severity Zone Map. The City of Beverly Hills city council hereby designates very high fire hazard severity zones as recommended by the director of the California department of forestry and fire protection and as designated on a map titled very high fire hazard severity zone, May 1, 2008 and retained on file at the office of the fire marshal, 445 North Rexford Drive."

"Section 4902.1 of the California Fire Code is amended by adding the following definitions:

VEGETATIVE GROWTH. Any native brush, or weeds, or grass, or specimen native shrub, or any live, or dead organic material as designated by the fire chief.

VERY HIGH FIRE HAZARD SEVERITY ZONE. That area included within the boundaries described and set forth in a map maintained by the fire chief on file in the office of the fire prevention bureau.

NATIVE BRUSH. All varieties of vegetative growth other than trees, that are indigenous to and found within the very high fire hazard severity zone except those plants that are identified as 'fire resistive plants' in a list established and maintained by the fire chief.

NON-VERY HIGH FIRE HAZARD SEVERITY ZONE. That area within the city limits not included within the boundaries described and set forth in a map maintained by the fire chief on file in the office of the fire prevention bureau.

SPECIMEN NATIVE SHRUB. An individual shrub that is within the definition of 'native brush' and that is trimmed up one-third of its height or six (6') feet above the ground, whichever is less, and from the vicinity of which has been removed all dead wood, duff, and combustible litter; and that is not among those plants identified as 'extremely hazardous native brush' in a list established and maintained by the fire chief.

STRUCTURE. That which is built or constructed, including an edifice or building of any kind, or any piece of work artificially built up or composed of parts joined together in some definite manner.
FUEL MODIFICATION ZONE. The area existing between one hundred (100') feet and two hundred (200') feet, in any direction from any structure, unless otherwise specified by the chief."

"Section 4906.2 of the California Fire Code is amended to read as follows:

4906.2 Application. Buildings and structures located in the following areas shall maintain the required hazardous vegetation and fuel management:

1. All unincorporated lands designated by the State Board of Forestry and Fire Protection as State Responsibility Area (SRA) including:

    1.1. Moderate Fire Hazard Severity Zones
    1.2. High Fire Hazard Severity Zones
    1.3. Very-High Fire Hazard Severity Zones

2. Land designated as Very-High Fire Hazard Severity Zone by the Beverly Hills High Fire Zone Map shall comply with section 4906.3.2

3. Land not designated as Very-High Fire Hazard Severity Zone of the Beverly Hills High Fire Zone Map shall be known as Non-High Fire Hazard Severity Zones and shall comply with Chapter 49 and Beverly Hills amendments of the California Fire Code."

"Section 4906.3.1 and 4906.3.2 are added to the California Fire Code to read as follows:

4906.3.1 Very high fire hazard severity zone required maintenance. Persons owning, leasing, controlling, operating or maintaining buildings or structures in, upon or adjoining very high fire hazard severity zone fire areas, and persons owning, leasing or controlling land adjacent (within 200 feet) to such buildings or structures, shall at all times comply with the following requirements:

1. Maintain all native brush, weeds, grass, and hazardous vegetation situated within one hundred feet (100') of ANY structure, regardless of whether said structure is located upon such land or upon adjacent land shall be maintained at a height of not more than three inches (3") above the ground.
2. Reduce the fuel load within the fuel modification zone (100' to 200') around any structure regardless of whether said structure is located upon such land or upon adjacent land. Exception: Specimen native shrubs may be retained throughout the first 100 feet provided they are: spaced at a distance not less than eighteen feet (18') from other native shrubs, brush or structures; maintained free of dead wood and litter; and trimmed up at least six feet (6') from the ground or 1/3 of their height, whichever is less.
3. Maintain all native brush, weeds, grass and hazardous vegetation within ten feet (10') of any combustible fence shall be maintained at a height of not more than three inches (3") above the ground.
4. Remove all trees, shrubs, bushes, and other growing vegetation or portions thereof, adjacent to or overhanging any structure shall be kept free of dead limbs, branches, and other combustible matter.
5. Maintain all trees shall be trimmed up five feet (5') from the ground and maintained so that no portion is closer than ten feet (10') from the outlet of any chimney.
6. Maintain five feet (5') of vertical clearance between roof surfaces and portions of trees overhanging any building or structure.
7. Maintain all roof structures shall be kept free of substantial accumulations of leaves, needles, twigs, and other combustible matter.
8. Remove all cut vegetation and debris and legally disposed of. All vegetation, native or otherwise, shall be maintained so as not to constitute a fire hazard or public nuisance.
9. Clear all hazardous vegetation and other combustible growth within the first 100 feet surrounding all structures. Reduce the amount and/or modify the arrangement of hazardous vegetation within the fuel modification zone.
10. Prune the branches from the lower third of any native plants kept in this area. If the plant is over 18 feet in height, only the lower six feet (6') must be pruned. Heavy brush must be 'trimmed up' so that all foliage in the lower third of the plant is removed. Remove any dead plants (leave the lowest 3" and root structure to help prevent erosion.)
11. Remove dead material from live plants, trees, or other vegetation.
12. Remove or process all cut vegetation as follows: may be machine processed and left on the property to a maximum depth of three inches (3"), so long as none of the material is left within one hundred feet (100') of any structure. Machine processed material shall not be placed within ten feet (10') of usable road surfaces or driveways.
13. Maintain all landscape vegetation, including, but not limited to, conifers (e.g., cedar, cypress, fir, juniper, and pine), eucalyptus, acacia, palm and pampas grass in such a condition as not to provide an available fuel supply to augment the spread or intensity of a fire.

4906.3.2 Non-very high fire hazard severity zone required maintenance. Persons owning, leasing, controlling, operating or maintaining buildings or structures in, upon or adjoining High or Moderate fire hazard severity zones fire areas, and persons owning, leasing or controlling land adjacent (within 200 feet) to such buildings or structures, shall at all times comply with the following requirements:

1. Remove all trees, shrubs, bushes, and other growing vegetation or portions thereof, adjacent to or overhanging any structure shall be kept free of dead limbs, branches, and other combustible matter.
2. Maintain all roof structures shall be kept free of substantial accumulations of leaves, needles, twigs, and other combustible matter.
3. Remove all cut vegetation and debris and legally disposed of. All vegetation, native or otherwise, shall be maintained so as not to constitute a fire hazard or public nuisance.
4. Remove dead material from live plants, trees, or other vegetation.
5. Maintain all landscape vegetation, including, but not limited to, conifers (e.g., cedar, cypress, fir, juniper, and pine), eucalyptus, acacia, palm and pampas grass in such a condition as not to provide an available fuel supply to augment the spread or intensity of a fire."

"Section 4906.4 is added to the California Fire Code to read as follows:

4906.4 Authority of the Fire Chief to modify brush clearing requirements. If the fire chief determines in any specific case that difficult terrain, danger of erosion, or other unusual circumstances make strict compliance with the clearance of vegetation provisions of this section undesirable or impractical, he may suspend the enforcement thereof and require reasonable alternative measures. Nothing contained in this subsection shall be deemed to preclude the chief from requiring more than the minimum specific requirements set forth above when the chief determines that conditions exist which necessitate greater fire protection measures."

"Section 4906.5 is added to the California Fire Code to read as follows:

4906.5 Issuance of brush clearance notice. In addition to any other remedies for violations provided by law, including those remedies set forth in this code, the fire department may issue a "vegetation clearance notice" to the record owner and any tenant, lessee or other possessor of the affected properties, specifying the condition(s) required to be corrected, and setting forth a date by which corrective action must be taken. The fire department may take corrective action at the owner's *expense* in the event the required correction is not completed. If the owner fails to pay the cost incurred by the fire department to correct such condition(s) following notice of the cost and an opportunity to be heard, .the city council may make the expense a lien upon the property where such condition exists."

"Section 4906.6 is added to the California Fire Code to read as follows:

4906.6 Clearance of brush or vegetative growth from roadways. All native brush, weeds, grass and hazardous vegetation situated within ten (10') feet of the outer edge or edges of the usable road surface of any highway, street, alley or driveway serving more than one residence shall be maintained at a height of not more than three (3") inches above the ground."

Section 18. Penalty. Except where specified to be an infraction, violation of any provision of this Ordinance or any Code adopted herein by reference shall constitute a misdemeanor and shall be punishable by a fine not to exceed one thousand dollars ($1,000) or by imprisonment for a period not to exceed six (6) months, or by both such fine and imprisonment. Each and every day such a violation exists shall constitute a separate and distinct violation of this Ordinance.

Section 19. Civil Remedies. The violation of any of the provisions of this Ordinance or any Code adopted herein by reference shall constitute a nuisance and may be abated by the City through civil process by means of restraining order, preliminary or permanent injunction or in any other manner provided by law for the abatement of such nuisances.

Section 20. Severability. The City Council declares that, should any provision, section, paragraph, sentence, or word of this Ordinance be rendered or declared invalid by any final court action in a court of competent jurisdiction, or by reason of any preemptive legislation, the remaining provisions, sections, paragraphs, sentences and words of this Ordinance shall remain in full force and effect.

Section 21. The City Clerk shall certify to the adoption of this Ordinance.

Section 22. This Ordinance shall go into effect and be in full force and effect at 12:01 a.m. on the thirty-first (31st) day after its passage.

Adopted:

JIMMY DELSHAD
Mayor of the City of
Beverly Hills, California

ATTEST:

(SEAL)

BYRON POPE
City Clerk

APPROVED AS TO FORM:

LAURENCE S. WIENER
City Attorney

APPROVED AS TO CONTENT:

JEFF KOLIN
City Manager

SUSAN HEALY KEENE, AICP
Director of Community Development

For TJS

TIMOTHY J. SCRANTON
Fire Chief